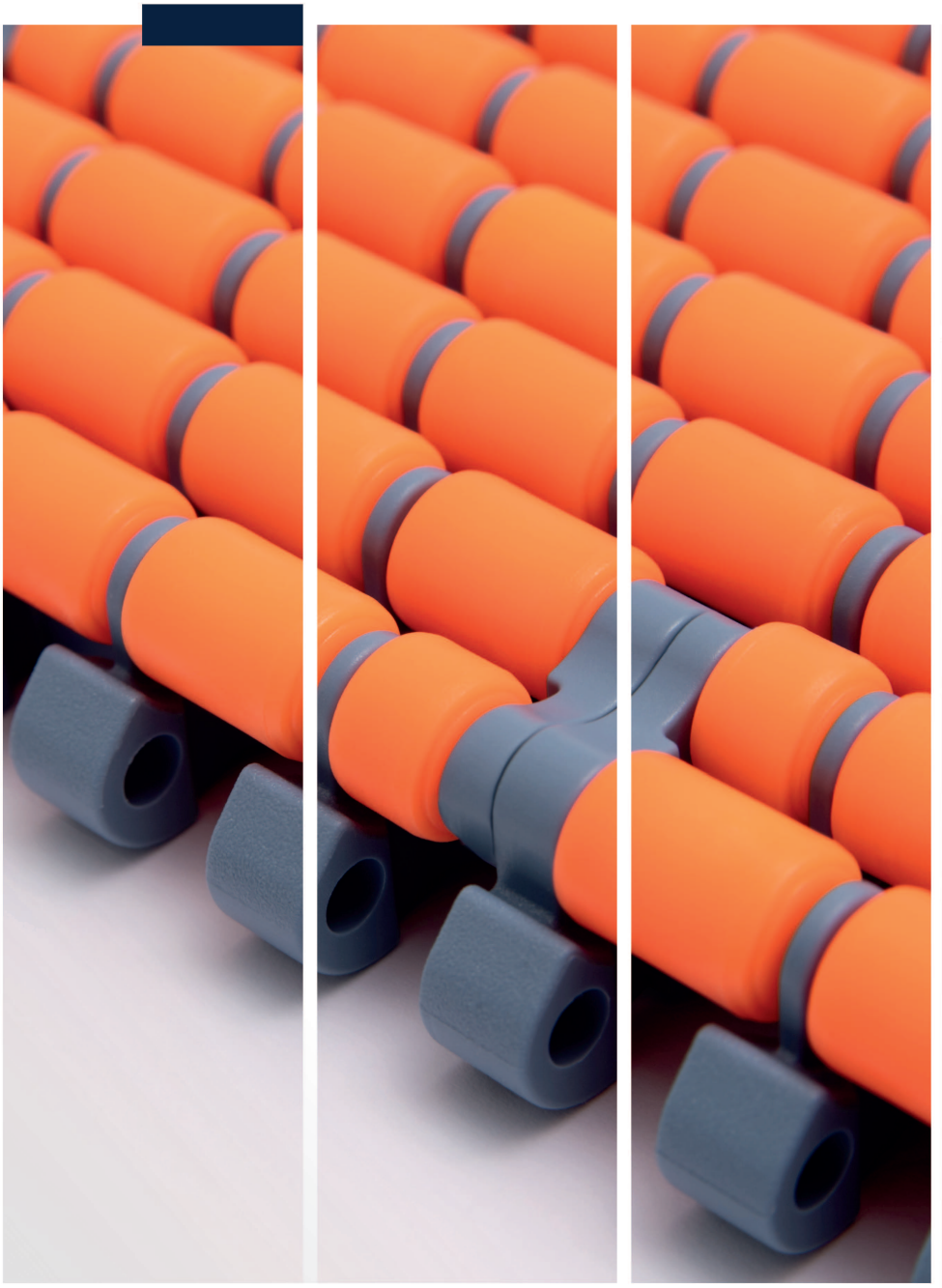

Second Edition

Conveyor components and modular solutions

Movex®

working in partnership with Oadby plastics

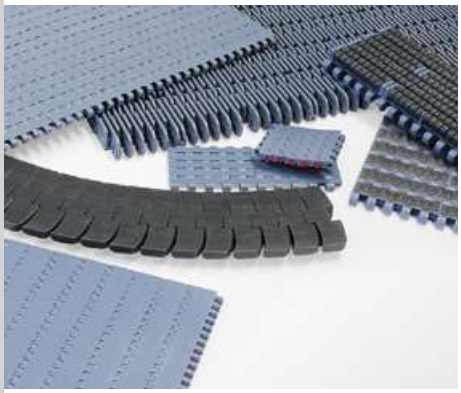

Our **HISTORY,** the basis for our **FUTURE.**

Movex® is a dynamic and flexible business reality that have been active in the industrial production for over ten years and is reaching market leadership as a reliable and precise supplier, planning the future without losing sight of its history and its values.

In the headquarters Movex® designs and manufactures high quality components for the beverage, packaging, food, logistics, automotive and automation industries.

Movex® meets your needs for standard and custom made products in a dynamic and responsive way, ensuring the best performance to satisfy our customers requirements.

A top service level is the goal of a qualified Engineering and Sales team with the objective of presenting Movex® as a supplier of excellence to all clients.

Through a distribution/network which spans the globe, Movex® offers technical support and a careful after-sales service, always at your disposal.

ABOUT US

>200
EMPLOYEES AROUND THE WORLD

>30%
ANNUAL GROWTH RATE
Reference year 2021

>6.000
SATISFIED CUSTOMERS

DESIGNED AND MANUFACTURED IN ITALY

Logistics center
Via della Repubblica 21/E
Castelli calepio (BG) - ITALY

MISSION

Creating value through development of ideas, supporting our partners with professionalism flexibility and effectiveness.

VISION

Reaching market leadership as a reliable and precise supplier. Planning the future without losing sight of our history and the values that allow our growth.

Headquarters
Viale Industria, 22
Castelli calepio (BG) - ITALY

ABOUT PRODUCTS

>35.000
PRODUCTS AVAILABLE

>12.000
NEW ARTICLE NUMBERS
Compared to the previous catalog version

<24 h
TIME FOR PROCESSING YOUR REQUESTS

Movex World

Three simple ways to keep in touch.

Website

Consult our catalogs and stay updated on our latest news.

www.movexii.com

Social media

News, curiosity and info about us and our products.

Follow us

Movex App

The easiest way to keep up to date on our events, projects.

Download it free!

SYNERGIA
CORPORATE SERVICE

Tailor-made support
for your business.

TECHNICAL SUPPORT

CONSULTING SERVICE

FAST ASSISTANCE

DATA COLLECTION

+39 035 8359711
synergia@movexii.com

Line survey, analysis and monitoring

THE ADVANTAGE OF BEING ALWAYS ON THE BALL.

Frequently, replacement of conveyor components are only executed when line performances starts decreasing, causing severe downtimes and loss of efficiency.

While you stay focused on your priorities, we will collect data and make an ideal plan to keep your line 100% efficient.

Full lifecycle product support

ENJOY PEACE OF MIND WITH A PREVENTIVE ACTION.

With SYNERGIA service you can easy identify the line conditions and determine an optimized replacement schedule.

- PLAN INTERVENTION ACTIONS • CORRECT REPLACEMENT PARTS
- ELIMINATE UNEXPECTED DOWNTIMES • SAVE ON TOTAL COST

Why choose us?

TELL US HOW WE CAN HELP.

By using SYNERGIA, your company will have the chance to work with a professional team of experts, specialized in conveyor components, able to help you from remote desktop or directly on site.

- ENGINEER • MECHANIC • TECHNICIAN • WELDER

CONTACT US AND CHOOSE YOUR SYNERGIA PLAN
THAT BEST SUITS YOUR NEEDS.

Priority service is optional, available on request

Priority service

Even faster and responsive, when you need it.

Products in stock are available to ship within 24 Hours of the receipt of order.

>10.000 ARTICLES NUMBER READY TO DELIVERY

Request a free quotation!

Movex

Table of contents

Sommario / Inhaltsverzeichnis

Steel chains	Pag 7
Plastic chains	Pag 27
Chain sprockets and Turning disks	Pag 77 / 102
Chain idler wheels	Pag 107
Magnetic, Tab & Bevel corner tracks	Pag 113
Modular belts and NoseBars	Pag 179 / 270
Modular solutions	Pag 285
Belt sprockets	Pag 311
Extruded profiles	Pag 341
Return components	Pag 435
Conveyor components	Pag 447
Conveyor support components	Pag 513
Bearing supports	Pag 529
Leveling feet	Pag 557
Materials	Pag 645

Movex®

movexii.com

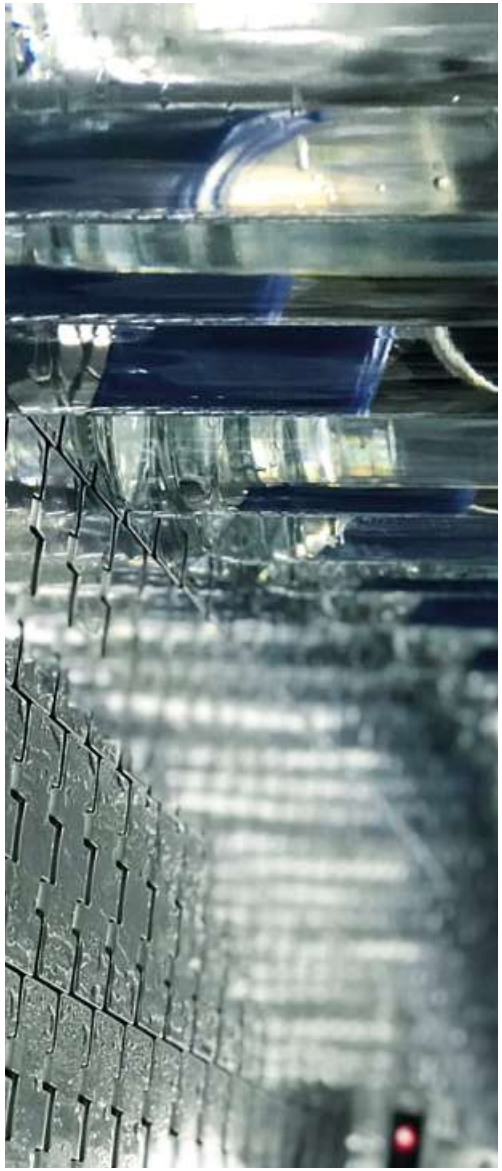

7

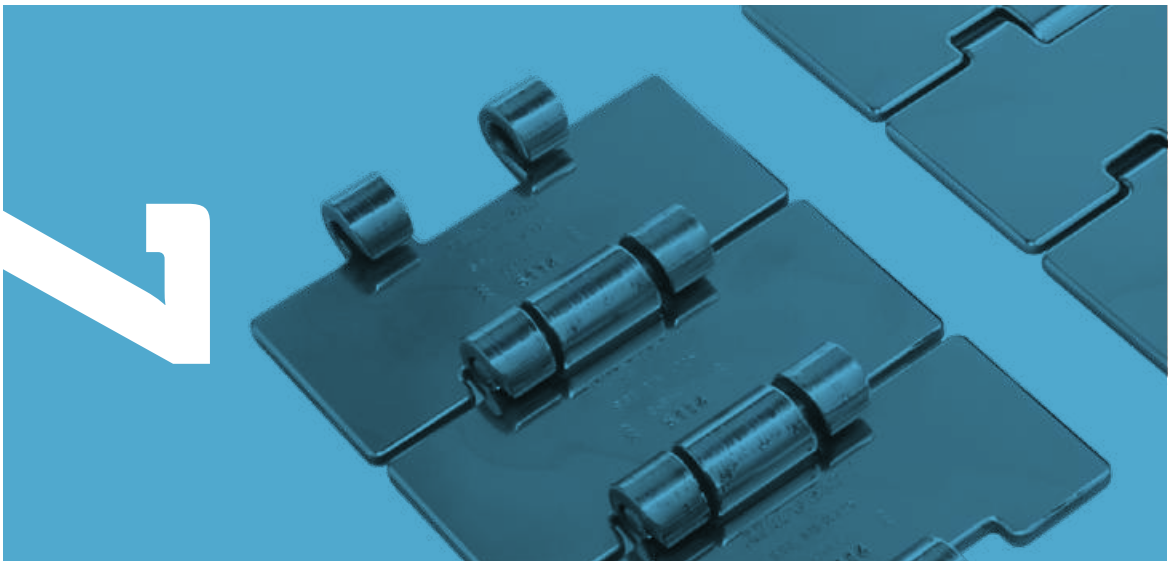

Steel chains

812/815 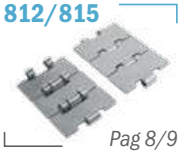 Pag 8/9

812 GT/815 GT Pag 10

815 TAB GT Pag 11

815 MINI Pag 12

815 MINI GT Pag 12

802/805 Pag 13

802 GT/805 GT Pag 14

8157 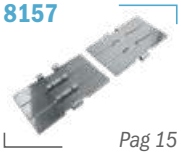 Pag 15

8157 GT Pag 15

512 Pag 16

881 M 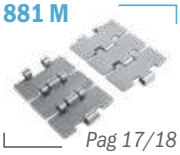 Pag 17/18

881 M GT Pag 19

881 TAB Pag 20

881 B 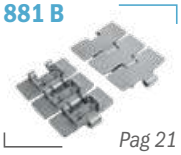 Pag 21

8811 TAB Pag 22

8811 R TAB 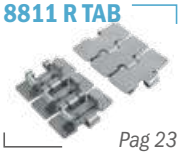 Pag 23

8811 TAB GT Pag 23

8811 B 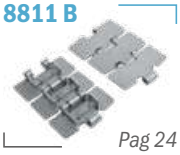 Pag 24

8857 M Pag 25

8857 M GT Pag 25

1874 TAB Pag 26

Material Info:

pg. 662->665

815 Catena rettilinea
Straight running chain / Geradegängige Scharnierbandkette

Delivery: Easy | Standard — **Pins:** Martensitic 1.4057 | **Backflex radius min.:** 150 mm

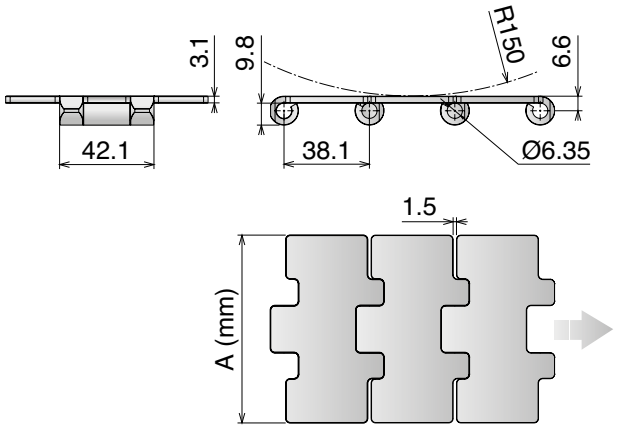

10 feet 3.048 m — 80 links | 78-79-93/108 | pg. 662>665

Article-Nr.	Ref.	A (Plate Width) mm	Weight kg/m	Surface finish µm	Surface Flatness mm	Polished Hinge eyes	Max working load (N)	Plate Thickness mm
SSM Max Speed - Hardened pins								
10010302	SSM 815 K325	82,5	2,55	0,2	0,08	YES	6000	3,1
10010303	SSM 815 K330	83,8	2,59	0,2	0,08	YES		

Max Speed High Performance

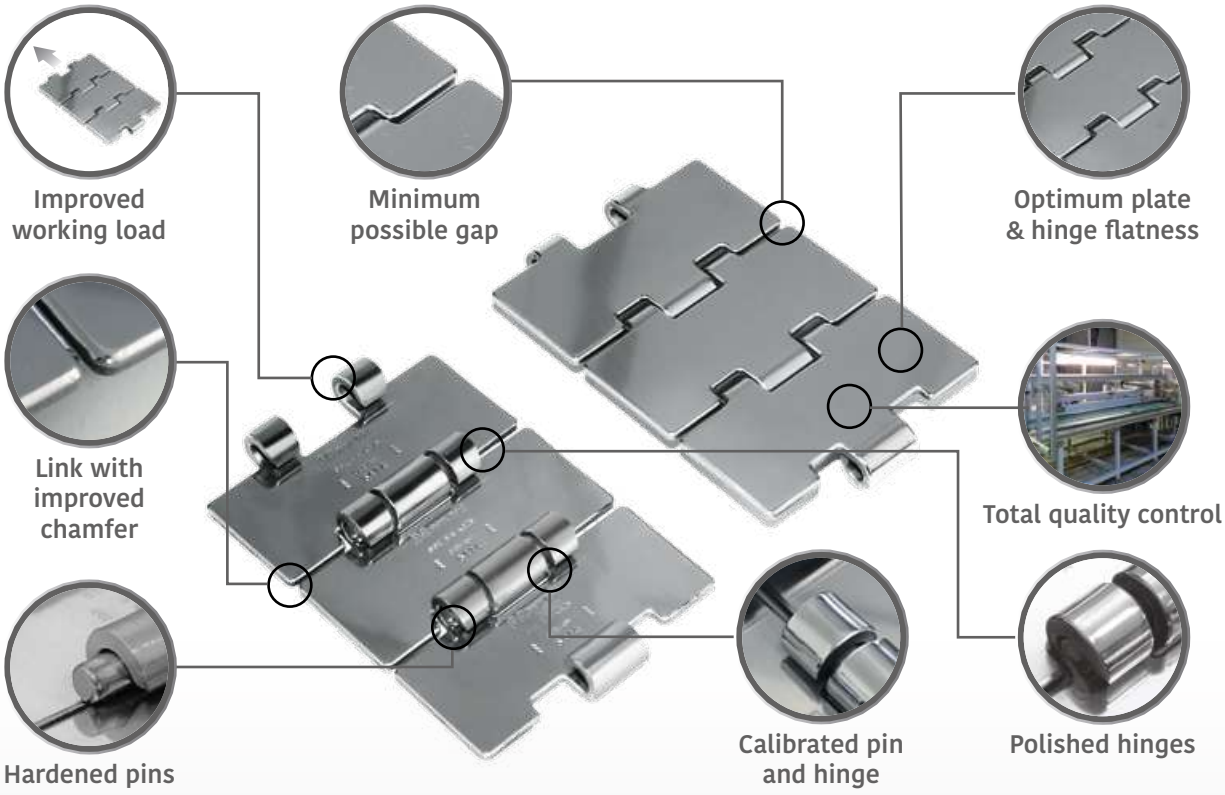

Oadby Core product range
Oadby Available from stock in Leicester | Easy Available from stock in Italy | Standard Produced to order in Italy

Movex

812/815

Catena rettilinea
Straight running chain / Geradegängige Scharnierbandkette

Delivery: Easy | Standard

Pins: Martensitic 1.4057 | **Backflex radius min.:** 150 mm

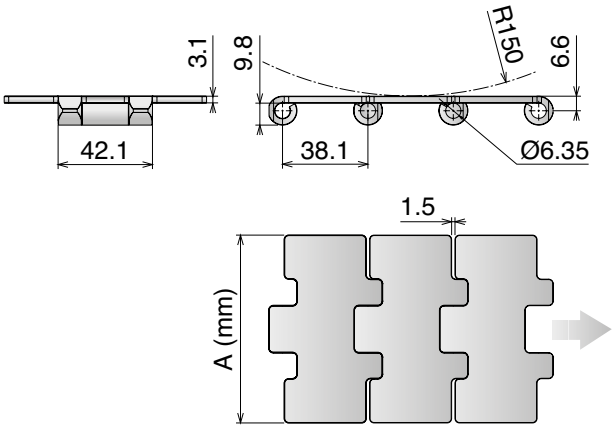

10 feet 3.048 m | 80 links | 78-79-93/108 | pg. 662>665

Article-Nr.	Ref.	A (Plate Width) mm	Weight kg/m	Surface finish µm	Surface Flatness mm	Polished Hinge eyes	Max working load (N)	Plate Thickness mm
			SS *Ferritic Stainless Steel (1.4016)*					
10010216	SS 812 K300	76,2	2,50	0,5	0,15	NO	5400	3,1
10010202	SS 812 K325	82,5	2,55	0,5	0,15	NO		
10010203	SS 812 K330	83,8	2,59	0,5	0,15	NO		
10010204	SS 812 K350	88,9	2,69	0,5	0,15	NO		
10010214	SS 812 K400	101,6	3,00	0,5	0,15	NO		
10010205	SS 812 K450	114,3	3,25	0,5	0,20	NO		
10010206	SS 812 K600	152,4	4,15	0,5	0,30	NO		
10010207	SS 812 K750	190,5	5,05	0,5	0,30	NO		
			SSE *Specially treated Ferritic Stainless Steel (1.4589)* - **Hardened pins**					
10010102	SSE 815 K325	82,5	2,55	0,3	0,10	YES	6000	3,1
10010103	SSE 815 K330	83,8	2,59	0,3	0,10	YES		
10010104	SSE 815 K350	88,9	2,69	0,3	0,15	NO		
10010114	SSE 815 K400	101,6	3,00	0,3	0,15	NO		
10010105	SSE 815 K450	114,3	3,25	0,3	0,20	NO		
10010106	SSE 815 K600	152,4	4,15	0,3	0,30	NO		
10010107	SSE 815 K750	190,5	5,05	0,3	0,30	NO		
			SSA *Austenitic Stainless Steel (AISI 304) - Austenitic pin*					
10010402	SSA 815 K325	82,5	2,55	0,5	0,15	NO	5300	3,1
10010403	SSA 815 K330	83,8	2,59	0,5	0,15	NO		
10010404	SSA 815 K350	88,9	2,69	0,5	0,15	NO		
10010405	SSA 815 K450	114,3	3,25	0,5	0,20	NO		
10010406	SSA 815 K600	152,4	4,15	0,5	0,30	NO		
10010407	SSA 815 K750	190,5	5,05	0,5	0,30	NO		

812 GT/815 GT

Catena rettilinea
Straight running chain / Geradegängige Schanierbandkette

Delivery: Easy | Standard

Pins: Martensitic 1.4057 | **Backflex radius min.:** 120 mm

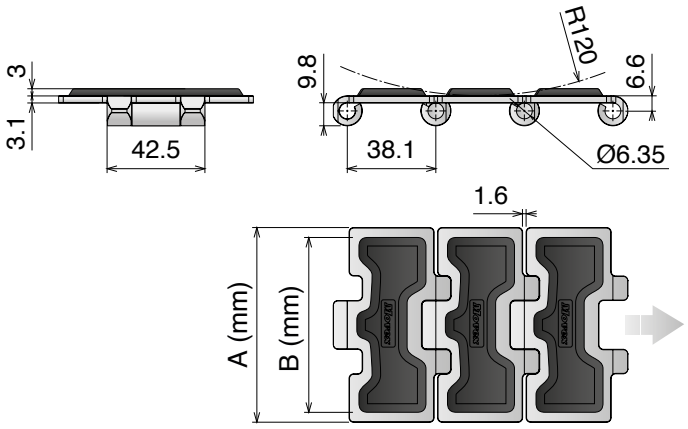

10 feet
3.048 m
80 links

78-79-93/108

pg. 662>665

Article-Nr.	Ref.	A (Plate Width) mm	B (Rubber Width) mm	Weight kg/m	Max working load (N)	Plate/Rubber Thickness mm
			SS *Ferritic Stainless Steel (1.4016)*			
10020202	SS 812 GT K325	82,5	75	2,80	5400	Plate 3,1 Rubber 3
			SSE *Specially treated Ferritic Stainless Steel (1.4589)* **- Hardened pins**			
10020102	SSE 815 GT K325	82,5	75	2,80	6000	Plate 3,1 Rubber 3
10020105	SSE 815 GT K450	114,3	107	3,55		
10020107	SSE 815 GT K750	190,5	140	5,55		

Oadby Core product range
Oadby Available from stock in Leicester
Easy Available from stock in Italy
Standard Produced to order in Italy

Movex

815 TAB GT

Catena rettilinea
Straight running chain / Geradegängige Schanierbandkette

Delivery: Easy | Standard

Pins: Martensitic 1.4057 | **Backflex radius min.:** 120 mm

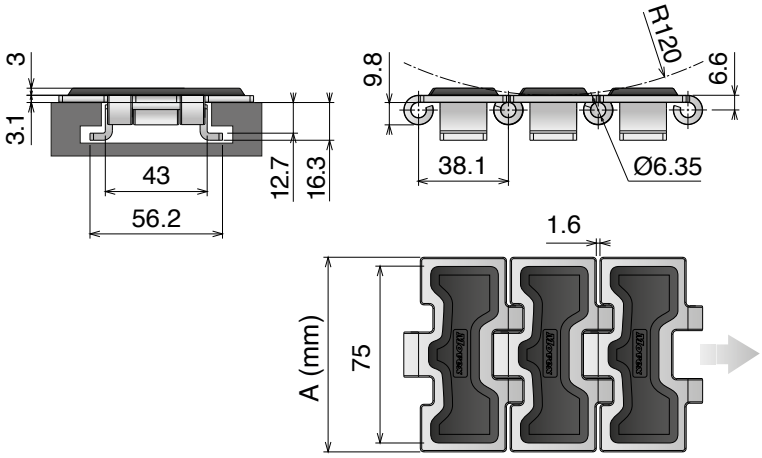

TAB SYSTEM

10 feet 3.048 m | 80 links | 78-79-93/108 | pg. 662>665

Article-Nr.	Ref.	A (Plate Width) mm	Weight kg/m	Max working load (N)	Plate/Rubber Thickness mm
	SSE *Specially treated Ferritic Stainless Steel (1.4589)* **- Hardened pins**				
10200102	**SSE 815 TAB GT K325**	82,5	3,40	6000	Plate 3,1 Rubber 3

815 MINI

Catena rettilinea
Straight running chain / Geradegängige Schanierbandkette

Delivery: Easy | Standard — **Pins:** Martensitic 1.4057 | **Backflex radius min.:** 75 mm

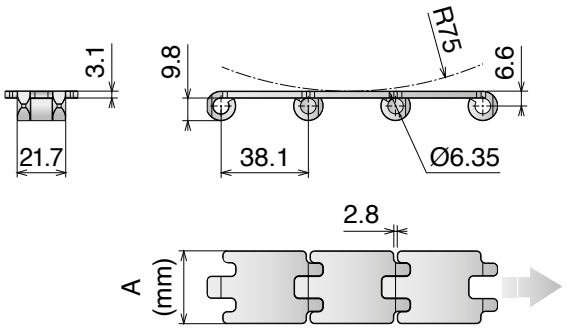

10 feet 3.048 m — 80 links | pg. 96 | pg. 662>665

Article-Nr.	Ref.	A (Plate Width) mm	Weight kg/m	Max working load (N)	Plate Thickness mm
SSE *Specially treated Ferritic Stainless Steel (1.4589)* - **Hardened pins**					
10210117	**SSE 815 K125**	31,75	1,07	3000	3,1
10210118	**SSE 815 K175**	44,45	1,35		

815 MINI GT

Catena rettilinea
Straight running chain / Geradegängige Schanierbandkette

Delivery: Easy | Standard — **Pins:** Martensitic 1.4057 | **Backflex radius min.:** 75 mm

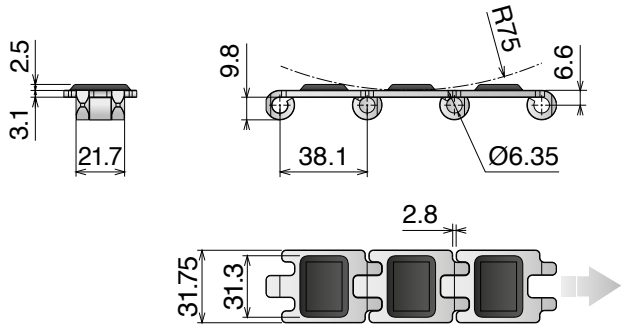

10 feet 3.048 m — 80 links | pg. 96 | pg. 662>665

Article-Nr.	Ref.	A (Plate Width) mm	B (Rubber Width) mm	Weight kg/m	Max working load (N)	Plate/Rubber Thickness mm
SSE *Specially treated Ferritic Stainless Steel (1.4589)* - **Hardened pins**						
10230117	**SSE 815 GT K125**	31,75	31,3	1,20	4000	Plate 3,1 Rubber 2,5

Oadby Core product range
Oadby Available from stock in Leicester | Easy Available from stock in Italy | Standard Produced to order in Italy

Movex

802/805

Catena rettilinea
Straight running chain / Geradegängige Scharnierbandkette

Delivery: Easy | Standard

Pins: Martensitic 1.4057 | **Backflex radius min.:** 150 mm

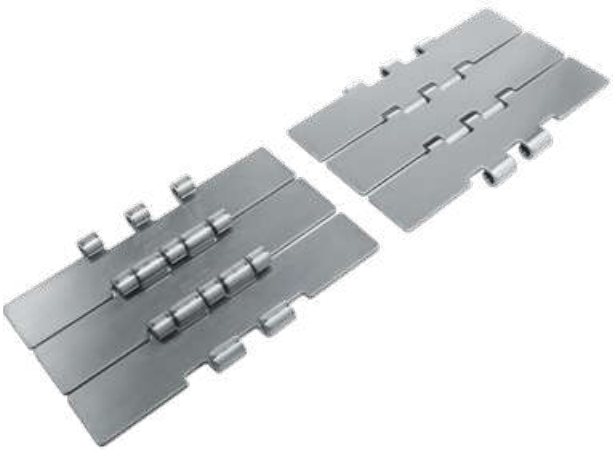

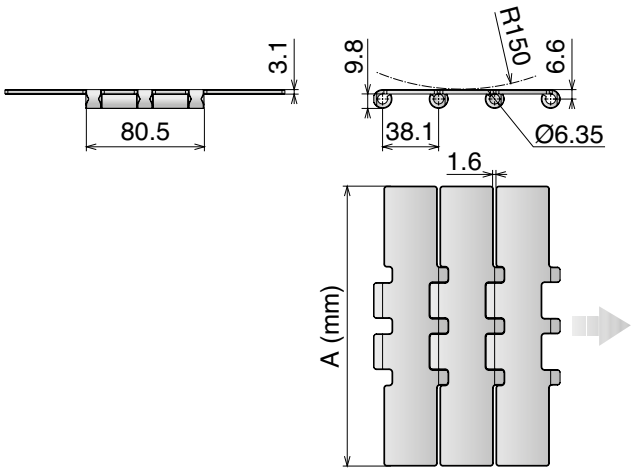

10 feet
3.048 m
80 links

pg. 82-94/109
pg. 662->665

Article-Nr.	Ref.	A (Plate Width) mm	Weight kg/m	Surface finish µm	Max working load (N)	Plate Thickness mm
		SS *Ferritic Stainless Steel (1.4016)*				
10030207	**SS 802 K750**	190,5	5,80	0,6	7000	3,1
		SSE *Specially treated Ferritic Stainless Steel (1.4589)* **- Hardened pins**				
10030107	**SSE 805 K750**	190,5	5,80	0,3	9000	3,1
		SSA *Austenitic Stainless Steel (AISI 304) - Austenitic pin*				
10030407	**SSA 805 K750**	190,5	5,80	0,6	8700	3,1

802 GT/805 GT

Catena rettilinea
Straight running chain / Geradegängige Schanierbandkette

Delivery: Easy | Standard

Pins: Martensitic 1.4057 | **Backflex radius min.:** 130 mm

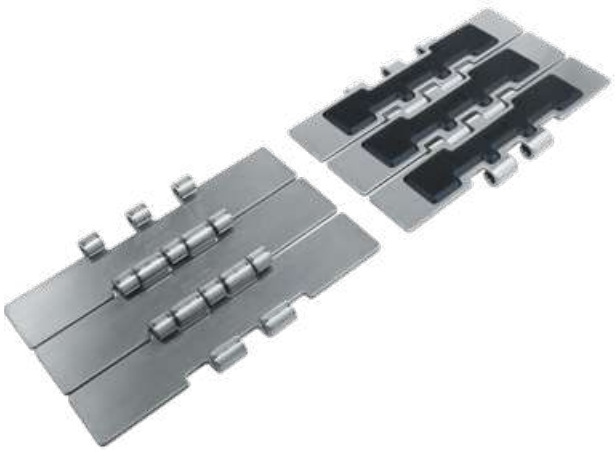

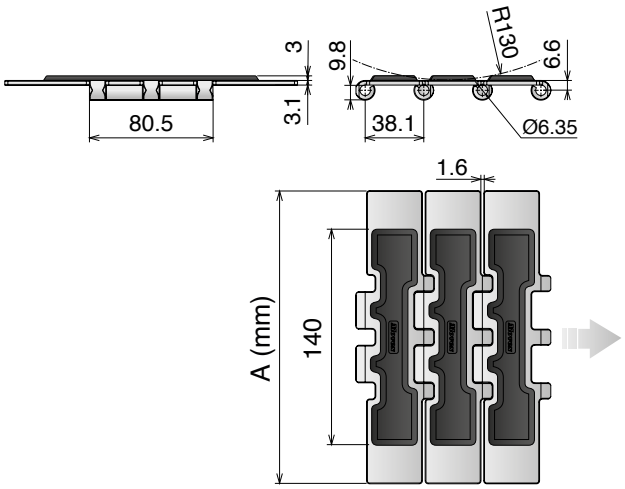

10 feet
3.048 m
80 links

pg. 82-94/109
pg. 662>665

Article-Nr.	Ref.	A (Plate Width) mm	Weight kg/m	Max working load (N)	Plate/Rubber Thickness mm
		SS *Ferritic Stainless Steel (1.4016)*			
10040207	**SS 802 GT K750**	190,5	6,20	7000	Plate 3,1 Rubber 3
		SSE *Specially treated Ferritic Stainless Steel (1.4589)* **- Hardened pins**			
10040107	**SSE 805 GT K750**	190,5	6,20	9000	Plate 3,1 Rubber 3

Oadby Core product range
Oadby Available from stock in Leicester
Easy Available from stock in Italy
Standard Produced to order in Italy

Movex

8157

Catena rettilinea
Straight running chain / Geradegängige Scharnierbandkette

Delivery: Easy | Standard — **Pins:** Martensitic 1.4057 | **Backflex radius min.:** 130 mm

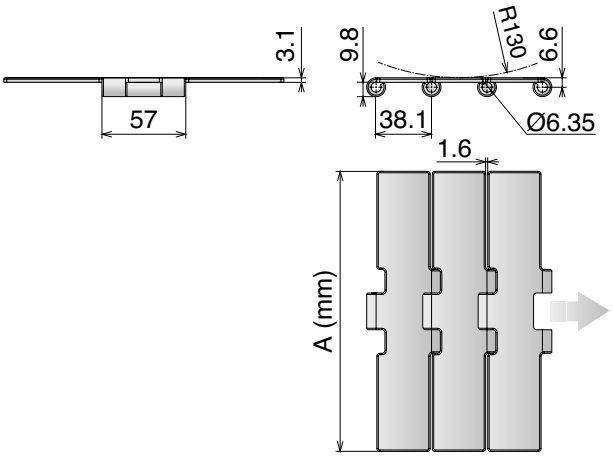

10 feet 3.048 m — 80 links | pg. 83-93/110 | pg. 662>665

Article-Nr.	Ref.	A (Plate Width) mm	Weight kg/m	Surface finish µm	Max working load (N)	Plate Thikness mm
SSE *Specially treated Ferritic Stainless Steel (1.4589)* - **Hardened pins**						
10050107	**SSE 8157 K750**	190,5	5,60	0,3	7000	3,1

8157 GT

Catena rettilinea
Straight running chain / Geradegängige Schanierbandkette

Delivery: Easy | Standard — **Pins:** Martensitic 1.4057 | **Backflex radius min.:** 130 mm

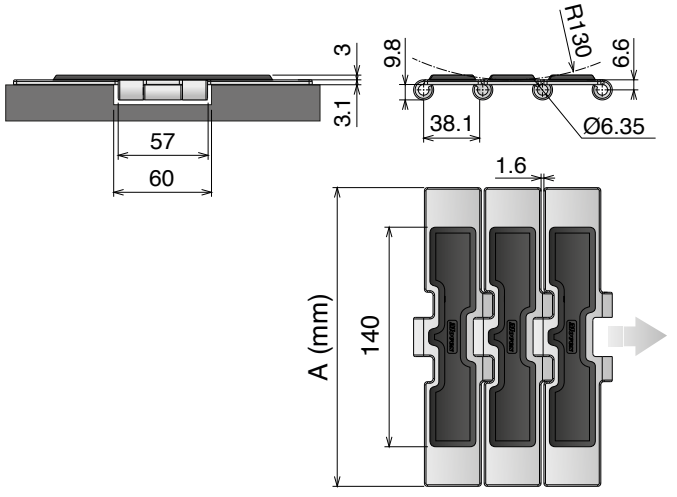

10 feet 3.048 m — 80 links | pg. 83-93/110 | pg. 662>665

Article-Nr.	Ref.	A (Plate Width) mm	Weight kg/m	Max working load (N)	Plate/Rubber Thickness mm
SSE *Specially treated Ferritic Stainless Steel (1.4589)* - **Hardened pins**					
10060107	**SSE 8157 GT K750**	190,5	6,00	10000	Plate 3,1 Rubber 3

512 Catena rettilinea
Straight running chain / Geradegängige Scharnierbandkette

Delivery: Easy | Standard — **Pins:** Martensitic 1.4057 | **Backflex radius min.:** 80 mm

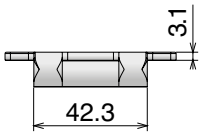

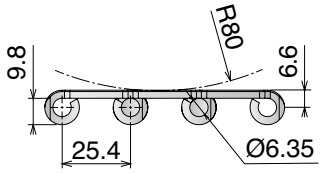

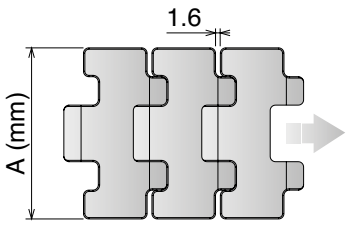

10 feet 3.048 m — 120 links | pg. 92-95 | pg. 662>665

Article-Nr.	Ref.	A (Plate Width) mm	Weight kg/m	Surface finish µm	Max working load (N)	Plate Thickness mm
SSE *Specially treated Ferritic Stainless Steel (1.4589)* **- Hardened pins**						
10070100	SSE 512 K217	55,1	2,30	0,3	5000	3,1
10070101	SSE 512 K236	59,9	2,40	0,3		
10070108	SSE 512 K250	63,5	2,45	0,3		
10070109	SSE 512 K283	71,9	2,65	0,3		
10070102	SSE 512 K325	82,5	2,90	0,3		
10070104	SSE 512 K350	88,9	3,00	0,3		
10070114	SSE 512 K400	101,6	3,30	0,3		
SSA *Austenitic Stainless Steel (AISI 304) - Austenitic pin*						
10070400	SSA 512 K217	55,1	2,30	0,3	4500	3,1
10070401	SSA 512 K236	59,9	2,40	0,3		
10070408	SSA 512 K250	63,5	2,45	0,3		
10070409	SSA 512 K283	71,9	2,65	0,3		
10070414	SSA 512 K400	101,6	3,30	0,3		

Oadby Core product range
Oadby Available from stock in Leicester | Easy Available from stock in Italy | Standard Produced to order in Italy
Movex

881 M

Catena curvilinea
Sideflexing chain / Kurvengängige Scharnierbandkette

Delivery: Easy | Standard

Pins: Martensitic 1.4057 | **Backflex radius min.:** 80 mm

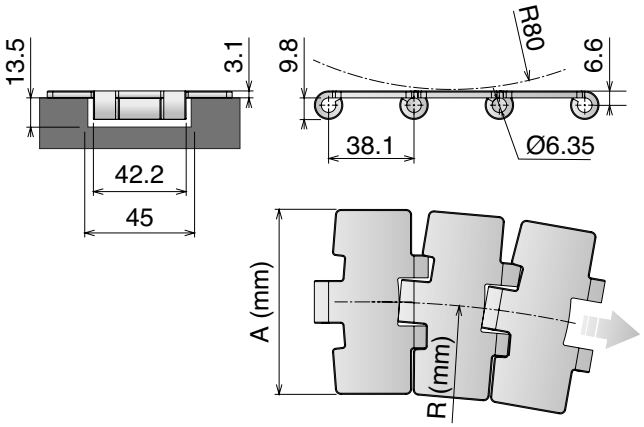

MAGNETIC SYSTEM

10 feet 3.048 m — 80 links

pg. 78->81-93/108-110 | pg. 115->130 | pg. 662>665

Article-Nr.	Ref.	A (Plate Width) mm	R mm	Weight kg/m	Surface finish µm	Surface Flatness mm	Polished Hinge eyes	Max working load (N)	Plate Thickness mm
SSM Max Speed - Hardened pins									
10080302	SSM 881 M0 K325	82,5	500	2,55	0,2	0,08	YES	6000	3,1
10080303	SSM 881 M0 K330	83,8	500	2,59	0,2	0,08	YES		

Max Speed High Performance

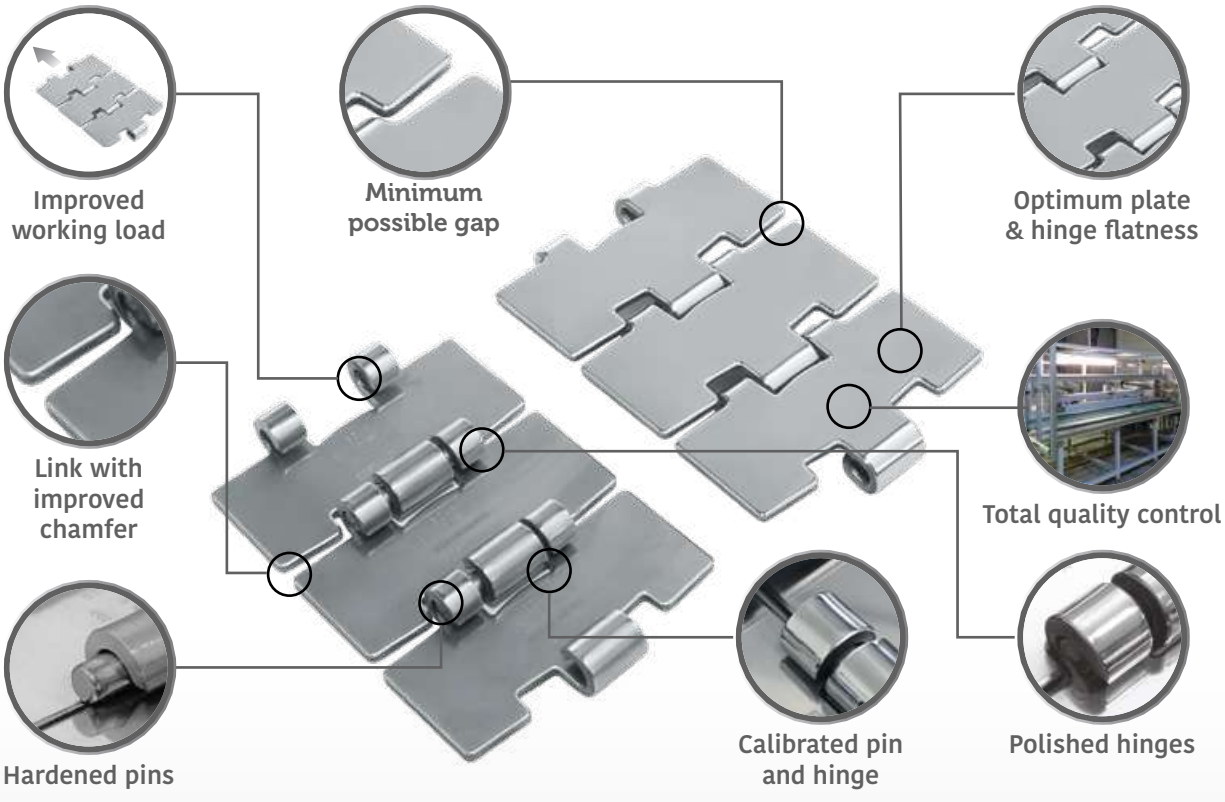

881 M

Catena curvilinea
Sideflexing chain / Kurvengängige Scharnierbandkette

Delivery: Easy | Standard

Pins: Martensitic 1.4057 | **Backflex radius min.:** 80 mm

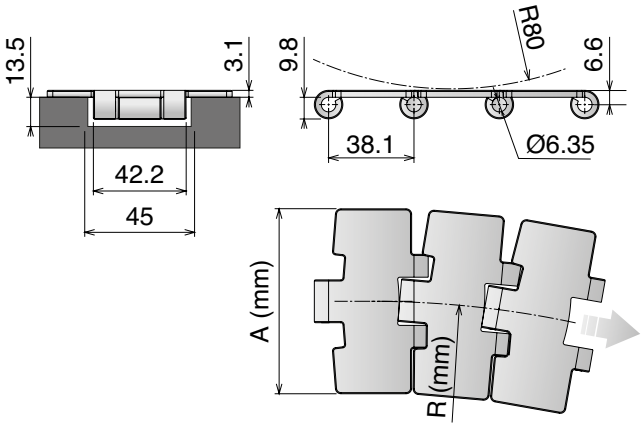

MAGNETIC SYSTEM

10 feet 3.048 m — 80 links

pg. 78->81-93/108-110 | pg. 115->130 | pg. 662>665

Article-Nr.	Ref.	A (Plate Width) mm	R mm	Weight kg/m	Surface finish µm	Surface Flatness mm	Polished Hinge eyes	Max working load (N)	Plate Thickness mm
				SS *Ferritic Stainless Steel (1.4016)*					
10080202	SS 881 M0 K325	82,5	500	2,55	0,5	0,15	YES	5400	3,1
10080203	SS 881 M0 K330	83,8	500	2,59	0,5	0,15	YES		
10080205	SS 881 M0 K450	114,3	500	3,10	0,5	0,20	YES		
10080207	SS 881 M0 K750	190,5	500	4,85	0,5	0,30	YES		
				SSE *Specially treated Ferritic Stainless Steel (1.4589)* **- Hardened pins**					
10080102	SSE 881 M0 K325	82,5	500	2,55	0,3	0,10	YES	6000	3,1
10080103	SSE 881 M0 K330	83,8	500	2,59	0,3	0,10	YES		
10080105	SSE 881 M0 K450	114,3	500	3,10	0,3	0,20	YES		
10080107	SSE 881 M0 K750	190,5	500	4,85	0,3	0,30	YES		

Oadby Core product range
Oadby Available from stock in Leicester | Easy Available from stock in Italy | Standard Produced to order in Italy

Movex

881 M GT

Catena curvilinea
Sideflexing chain / Kurvengängige Scharnierbandkette

Delivery: Easy Standard

Pins: Martensitic 1.4057 | **Backflex radius min.:** 80 mm

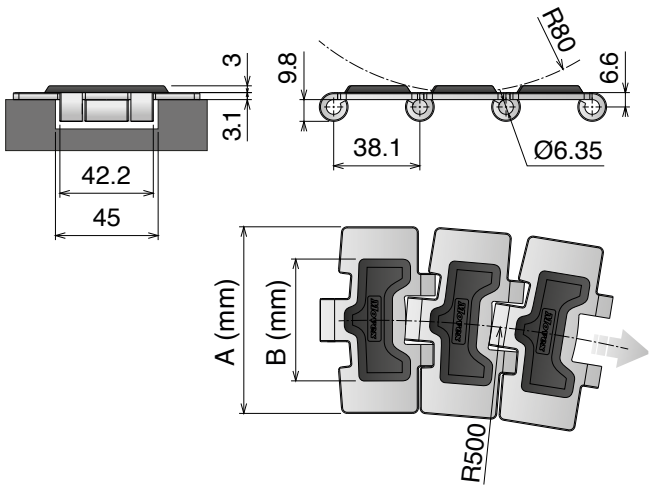

MAGNETIC SYSTEM

10 feet
3.048 m
80 links

pg. 78->81-93/108-110
pg. 115->130
pg. 662>665

Article-Nr.	Ref.	A (Plate Width) mm	B (Plate Width) mm	Weight kg/m	Max working load (N)	Plate/Rubber Thickness mm
SSE *Specially treated Ferritic Stainless Steel (1.4589)* - **Hardened pins**						
10090102	**SSE 881 M GT K325**	82,5	57	2,80	6000	Plate 3,1 Rubber 3
10090107	**SSE 881 M GT K750**	190,5	140	5,00		

881 TAB

Catena curvilinea
Sideflexing chain / Kurvengängige Scharnierbandkette

Delivery: Easy Standard | **Pins:** Martensitic 1.4057 | **Backflex radius min.:** 80 mm

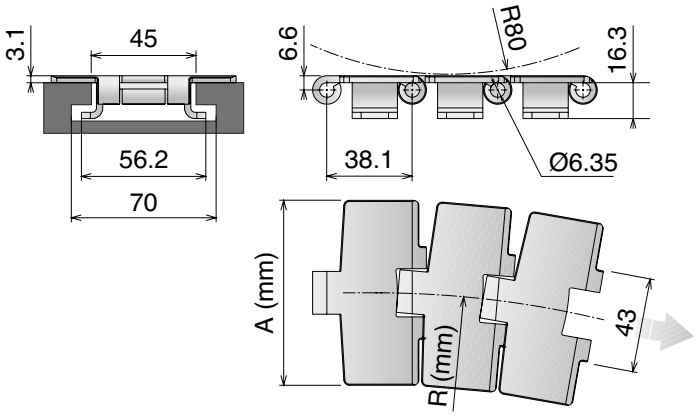

TAB SYSTEM

10 feet 3.048 m | 80 links | pg. 80-81/110 | pg. 163/175 | pg. 662>665

Article-Nr.	Ref.	A (Plate Width) mm	R mm	Weight kg/m	Surface finish µm	Max working load (N)	Plate Thickness mm
			SS *Ferritic Stainless Steel (1.4016)*				
10100202	SS 881 TAB K325	82,5	457	3,00	0,3	5400	3,1
			SSE *Specially treated Ferritic Stainless Steel (1.4589)* **- Hardened pins**				
10100102	SSE 881 TAB K325	82,5	457	3,00	0,3	6000	3,1
10100105	SSE 881 TAB K450	114,3	500	3,69	0,3		
10100107	SSE 881 TAB K750	190,5	500	5,50	0,3		
			SSA *Austenitic Stainless Steel (AISI 304) - Austenitic pin*				
10100402	SSA 881 TAB K325	82,5	457	3,00	0,3	4500	3,1
10100405	SSA 881 TAB K450	114,3	500	3,69	0,3		
10100407	SSA 881 TAB K750	190,5	500	5,50	0,3		

Oadby Core product range
Oadby Available from stock in Leicester | Easy Available from stock in Italy | Standard Produced to order in Italy

Movex

881 B

Catena curvilinea
Sideflexing chain / Kurvengängige Scharnierbandkette

Pins: Martensitic 1.4057 | **Backflex radius min.:** 60 mm

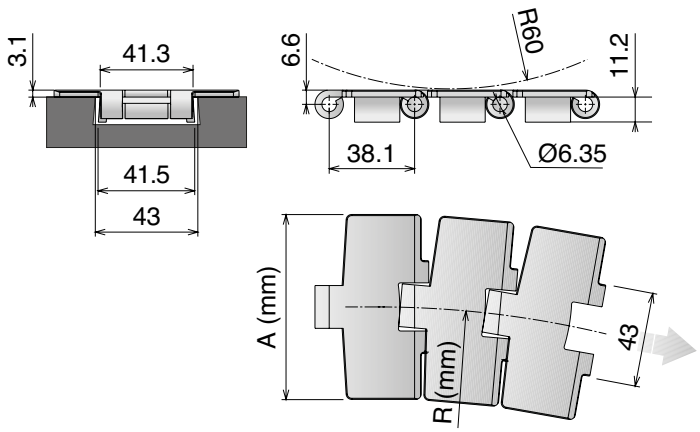

BEVEL SYSTEM

10 feet 3.048 m — 80 links | pg. 80-81/110 | pg. 174 | pg. 662>665

Article-Nr.	Ref.	A (Plate Width) mm	R mm	Weight kg/m	Surface finish µm	Max working load (N)	Plate Thickness mm
SSE *Specially treated Ferritic Stainless Steel (1.4589)* - **Hardened pins**							
10120102	**SSE 881 K325**	82,5	457	2,95	0,3	6000	3,1
10120104	**SSE 881 K350**	88,9	500	3,00	0,3		
10120105	**SSE 881 K450**	114,3	500	3,65	0,3		
10120107	**SSE 881 K750**	190,5	500	5,45	0,3		
SSA *Austenitic Stainless Steel (AISI 304) - Austenitic pin*							
10120402	**SSA 881 K325**	82,5	457	2,95	0,3	4500	3,1
10120405	**SSA 881 K450**	114,3	500	3,65	0,3		
10120407	**SSA 881 K750**	190,5	500	5,45	0,3		

8811 TAB

Catena curvilinea
Sideflexing chain / Kurvengängige Scharnierbandkette

Delivery: Easy | Standard

Pins: Martensitic 1.4057 | **Backflex radius min.:** 70 mm

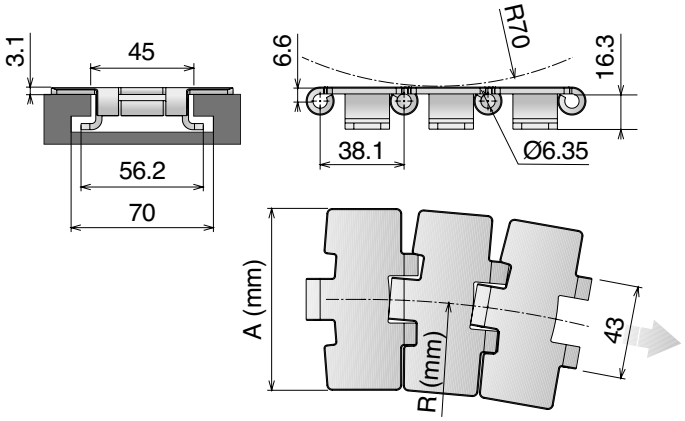

TAB SYSTEM

10 feet 3.048 m | 80 links | pg. 80-81/110 | pg. 163/175 | pg. 662>665

Article-Nr.	Ref.	A (Plate Width) mm	R mm	Weight kg/m	Surface finish µm	Max working load (N)	Plate Thickness mm
			SS *Ferritic Stainless Steel (1.4016)*				
10140202	SS 8811 TAB K325	82,5	500	2,95	0,3	5400	3,1
10140203	SS 8811 TAB K330	83,8	500	3,05	0,3		
10140205	SS 8811 TAB K450	114,3	610	3,65	0,3		
10140207	SS 8811 TAB K750	190,5	610	5,45	0,3		
			SSE *Specially treated Ferritic Stainless Steel (1.4589)* **- Hardened pins**				
10140102	SSE 8811 TAB K325	82,5	500	2,95	0,3	6000	3,1
10140103	SSE 8811 TAB K330	83,8	500	3,05	0,3		
10140104	SSE 8811 TAB K350	88,9	500	3,15	0,3		
10140105	SSE 8811 TAB K450	114,3	500	3,65	0,3		
10140107	SSE 8811 TAB K750	190,5	500	5,45	0,3		
			SSA *Austenitic Stainless Steel (AISI 304) - Austenitic pin*				
10140402	SSA 8811 TAB K325	82,5	500	2,95	0,3	4500	3,1
10140403	SSA 8811 TAB K330	83,8	500	3,05	0,3		
10140405	SSA 8811 TAB K450	114,3	500	3,65	0,3		
10140407	SSA 8811 TAB K750	190,5	500	5,45	0,3		

Oadby Core product range
Oadby Available from stock in Leicester | Easy Available from stock in Italy | Standard Produced to order in Italy

Movex

8811 R TAB

Catena curvilinea
Sideflexing chain / Kurvengängige Scharnierbandkette

Pins: Martensitic 1.4057 | **Backflex radius min.:** 80 mm

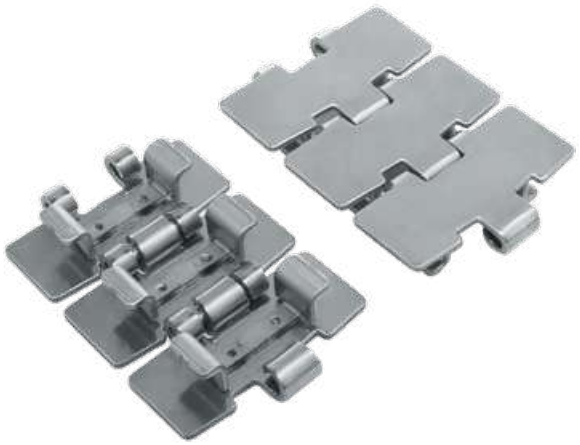

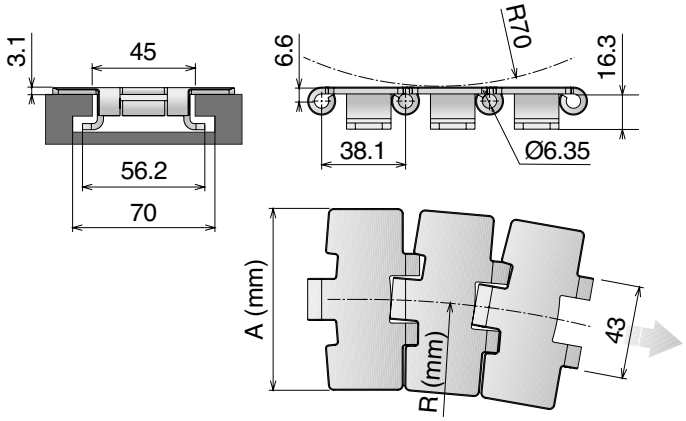

TAB SYSTEM **SMALL RADIUS**

10 feet 3.048 m | 80 links | pg. 80-81/110 | pg. 163/175 | pg. 662>665

Article-Nr.	Ref.	A (Plate Width) mm	R mm	Weight kg/m	Surface finish µm	Max working load (N)	Plate Thickness mm
			SS *Ferritic Stainless Steel (1.4016)*				
10240202	**SS 8811R TAB K325**	82,5	200	2,78	0,3	5400	3,1

8811 TAB GT

Catena curvilinea
Sideflexing chain / Kurvengängige Scharnierbandkette

Pins: Martensitic 1.4057 | **Backflex radius min.:** 80 mm

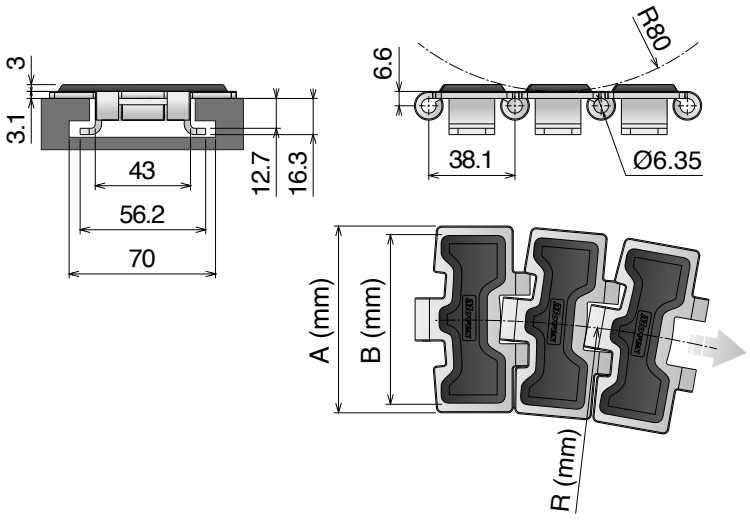

TAB SYSTEM

10 feet 3.048 m | 80 links | pg. 80-81/110 | pg. 163/175 | pg. 662>665

Article-Nr.	Ref.	A (Plate Width) mm	B (Plate Width) mm	R mm	Weight kg/m	Max working load (N)	Plate/Rubber Thickness mm
				SSE *Specially treated Ferritic Stainless Steel (1.4589)* - **Hardened pins**			
10150102	**SSE 8811 TAB GT K325**	82,5	75	500	3,20	6000	Plate 3,1 Rubber 3
10150107	**SSE 8811 TAB GT K750**	190,5	140	610	5,70		

8811 B

Catena curvilinea
Sideflexing chain / Kurvengängige Scharnierbandkette

Delivery: Easy | Standard

Pins: Martensitic 1.4057 | **Backflex radius min.:** 80 mm

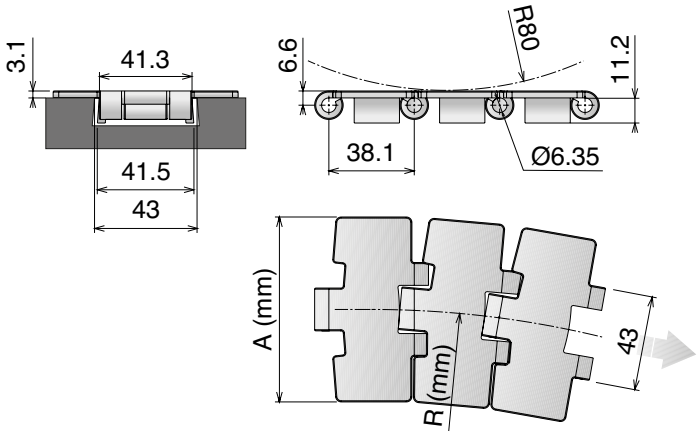

BEVEL SYSTEM

10 feet 3.048 m | 80 links

pg. 80-81/110 | pg. 174 | pg. 662>665

Article-Nr.	Ref.	A (Plate Width) mm	R mm	Weight kg/m	Surface finish µm	Max working load (N)	Plate Thickness mm
SSE *Specially treated Ferritic Stainless Steel (1.4589)* **- Hardened pins**							
10160102	SSE 8811 K325	82,5	500	2,90	0,3	6000	3,1
10160104	SSE 8811 K350	88,9	500	3,15	0,3		
10160105	SSE 8811 K450	114,3	500	3,60	0,3		
10160107	SSE 8811 K750	190,5	500	5,40	0,3		
SSA *Austenitic Stainless Steel (AISI 304) - Austenitic pin*							
10160402	SSA 8811 K325	82,5	500	2,90	0,3	4500	3,1
10160404	SSA 8811 K350	88,9	500	3,15	0,3		
10160405	SSA 8811 K450	114,3	500	3,60	0,3		
10160407	SSA 8811 K750	190,5	500	5,40	0,3		

Oadby Core product range
Oadby Available from stock in Leicester | Easy Available from stock in Italy | Standard Produced to order in Italy

Movex

8857 M

Catena curvilinea
Sideflexing chain / Kurvengängige Scharnierbandkette

Delivery: Easy | Standard

Pins: Martensitic 1.4057 | **Backflex radius min.:** 80 mm

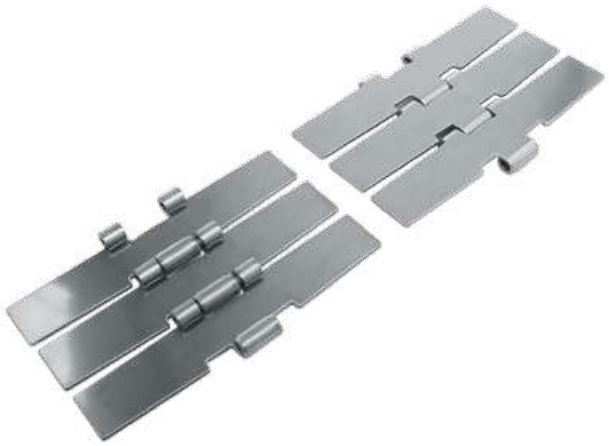

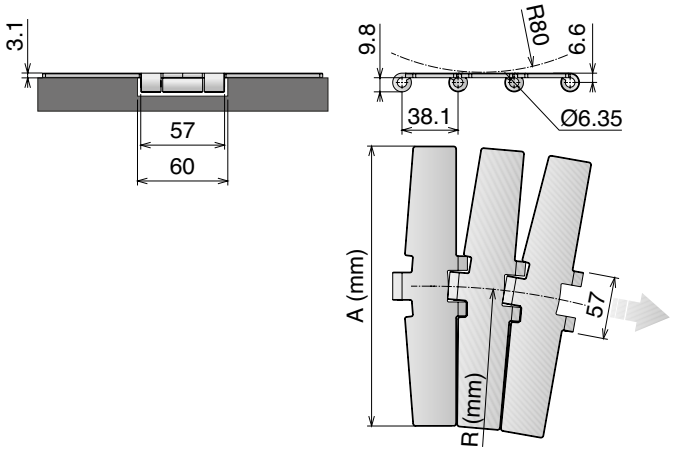

MAGNETIC SYSTEM

10 feet 3.048 m | 80 links | pg. 83-93/110 | pg. 132->134 | pg. 662>665

Article-Nr.	Ref.	A (Plate Width) mm	R mm	Weight kg/m	Surface finish µm	Max working load (N)	Plate Thickness mm
SSE *Specially treated Ferritic Stainless Steel (1.4589)* - **Hardened pins**							
10180107	SSE 8857 M K750	190,5	750	5,30	0,3	7000	3,1

8857 M GT

Catena curvilinea
Sideflexing chain / Kurvengängige Scharnierbandkette

Delivery: Easy | Standard

Pins: Martensitic 1.4057 | **Backflex radius min.:** 70 mm

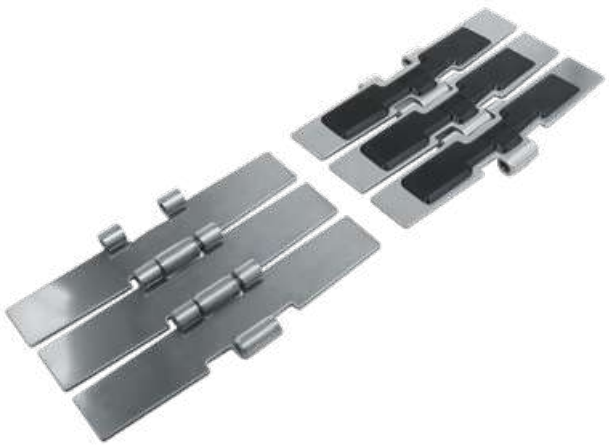

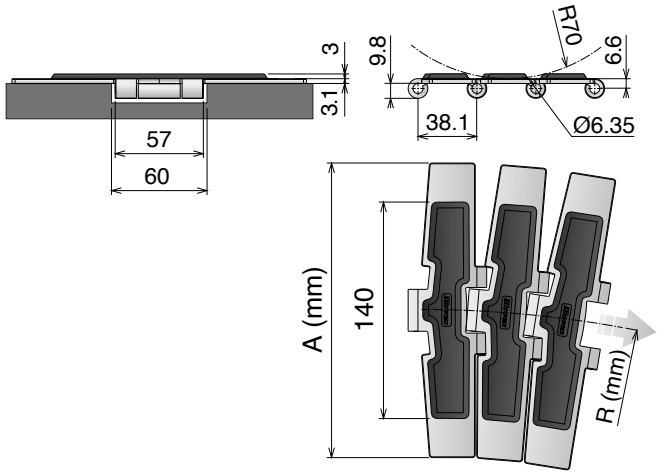

MAGNETIC SYSTEM

10 feet 3.048 m | 80 links | pg. 83-93/110 | pg. 131->136 | pg. 662>665

Article-Nr.	Ref.	A (Plate Width) mm	R mm	Weight kg/m	Surface finish µm	Max working load (N)	Plate/Rubber Thickness mm
SSE *Specially treated Ferritic Stainless Steel (1.4589)* - **Hardened pins**							
10190107	SSE 8857 M GT K750	190,5	750	5,70	0,3	10000	Plate 3,1 Rubber 3

1874 TAB

Catena curvilinea
Sideflexing chain / Kurvengängige Scharnierbandkette

Delivery: Easy | Standard

Backflex radius min.: 250 mm

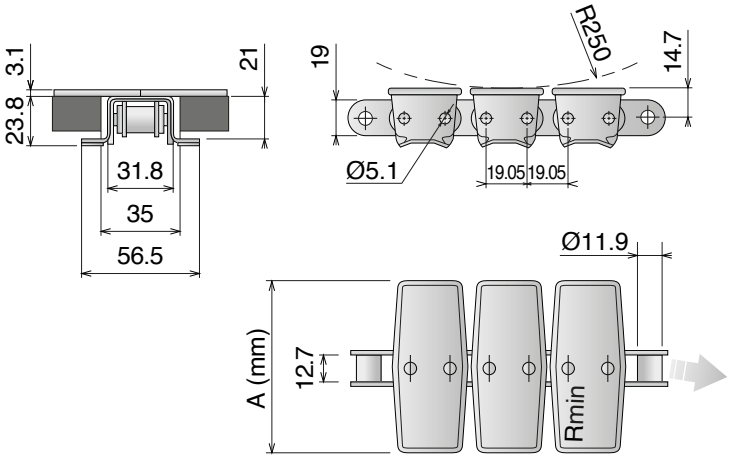

Standard lenght roller chain: 160 Pitches

TAB SYSTEM

10 feet
3.048 m
80 links

SPROCKET
ASA 60
Standard on market

pg. 167/176
pg. 662>665

Article-Nr.	Ref.	A (Plate Width) mm	R mm	Weight kg/m	Surface finish µm	Max working load (N)	Plate Thickness mm
			SSA *Austenitic Stainless Steel (AISI 304)*				
10220202	SS 1874 TAB K325	82,5	381	4,20	0,5	4500	3,1
10220205	SS 1874 TAB K450	114,3	381	4,80	0,5		
10220206	SS 1874 TAB K600	152,4	457	5,70	0,5		
10220207	SS 1874 TAB K750	190,5	610	6,40	0,5		

Oadby Core product range
Oadby Available from stock in Leicester
Easy Available from stock in Italy
Standard Produced to order in Italy

Movex

27

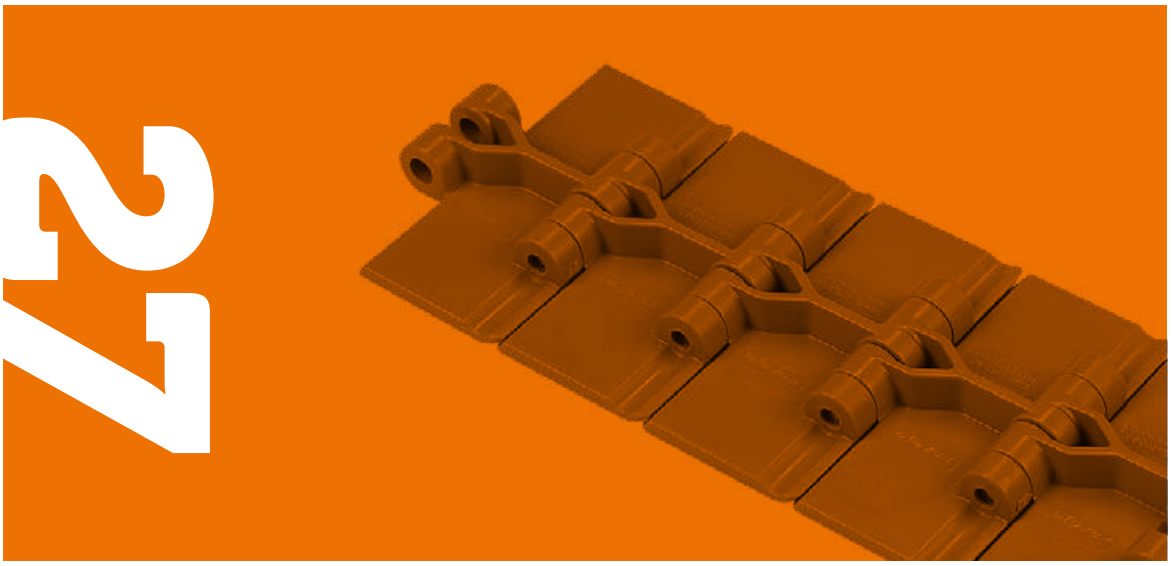

Plastic chains

820 Pag 29/30

820 V Pag 31

820 Plastic pin Pag 31

828 Pag 32

831 Pag 33

821 Pag 34

821 GT Pag 35

821 LBP Pag 36

8257 Pag 37

8257 GT Pag 38

8257 LBP Pag 39

878 TAB Pag 40

879 M Pag 41

879 TAB Pag 42

888 TAB Pag 43

888 TAB GT Pag 44

880 M Pag 45

880 TAB Pag 46

880 V TAB Pag 47

880 TAB Plastic pin Pag 48

880 TAB BO Pag 48

880 B Pag 49

882 M Pag 50

882 M GT Pag 51

882 M LBP Pag 52

882 TAB Pag 53

882 TAB GT Pag 54

882 TAB LBP Pag 55

1873 Pag 56

1873 GT Pag 57

1873 GRIPPER GS1 Pag 58

1873 GRIPPER GS2 Pag 59

1873 GRIPPER GS4 Pag 60

1873 D-SHAPE Pag 61

1873 MX1 Pag 62

1873 MX2 Pag 63

878 GRIPPER GS1 Pag 64

878 GRIPPER GS2 Pag 64

878 GRIPPER GS4 Pag 64

1843 Pag 65

SP 1883 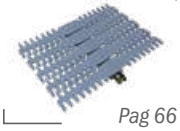 Pag 66

SP 1883 GT 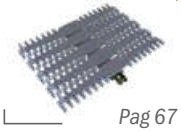 Pag 67

CC 600 Pag 68

CC 600 TAB Pag 68

CC 600 D Pag 69

CC 600 D TAB Pag 69

CC 1400 Pag 70

CC 1400 TAB Pag 70

Material Info:

pg. 651->661

1701 TAB OP 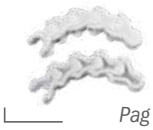 Pag 71

1701 TAB OPF 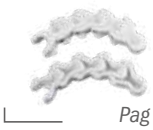 Pag 72

1706 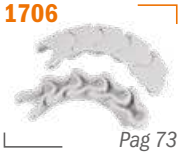 Pag 73

1706 TAB Pag 73

765 NO GAP Pag 74

43 MF Pag 75

63 MF Pag 75

83 MF Pag 75

103 MF 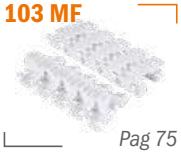 Pag 75

83 M Pag 76

140 M Pag 76

PFX

The best choice for dry running applications.

PFX is the plastic material specifically developed for chains and belts in order to run with limited lubrication or in dry applications where the demands are extreme concerning speed, performance & efficiency.

Realizing the many advantages and the versatility of our plastic compound, a growing number of companies are implementing ***PFX*** into their production lines with excellent results. Contact us, and request a free quotation!

Plastic chains available:

820 FT

828 FT

880 M

880 TAB

Other different types of product in PFX are on request.

Low friction
Developed to reduce friction between chain and product, and chain and wearstrip.

Minimal dusting
Developed to avoid dusting under extreme circumstances.

Food contact Certified
PFX material is suitable in food application.

High performance
Longer wear life lead to excellent and long enduring product handling features.

Control of cost
Better control of total cost & sustainable conveyor technology.

Patented material
PFX is an exclusive product of Movex.

Energy saving | Low friction | High efficiency | High visibility

FDA APPROVAL

Movex®

820 Catena rettilinea
Straight running chain / Geradegängige Scharnierbandkette

IMPROVED DESIGN

Delivery: Easy | Standard

Pins: Stainless Steel | **Backflex radius min.:** 50 mm

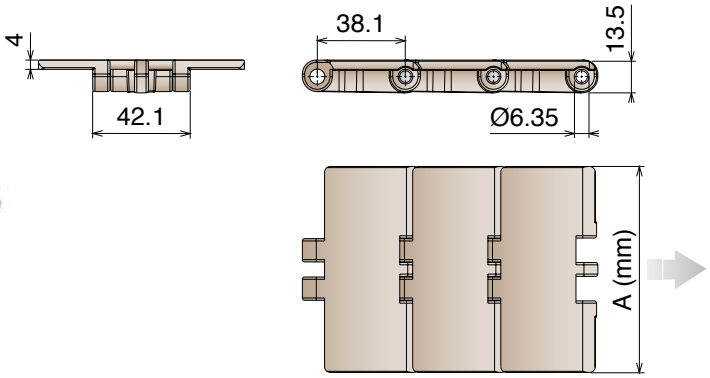

10 feet 3.048 m | 80 links | 84-85-94/108 | pg. 651>661

Article-Nr.	Ref.	A (Plate Width) mm	Weight kg/m	Max working load N	Material
11010102	LF 820 K325	82,5	0,89	1625	LF
11010103	LF 820 K330	83,8	0,90		
11010104	LF 820 K350	88,9	0,91		
11010114	LF 820 K400	101,6	0,95		
11010105	LF 820 K450	114,3	1,00		
11010106	LF 820 K600	152,4	1,22		
11010107	LF 820 K750	190,5	1,43		
11010302	MX 820 K325	82,5	0,89	1260	MX
11010303	MX 820 K330	83,8	0,90		
11010304	MX 820 K350	88,9	0,91		
11010314	MX 820 K400	101,6	0,95		
11010305	MX 820 K450	114,3	1,00		
11010306	MX 820 K600	152,4	1,22		
11010307	MX 820 K750	190,5	1,43		

820 Series
PRODUCT UPDATE

Movex created an optimized version in which the gap between the links is 45% lower and the contact surface has increased up to a maximum of 15%: the result is an improved product stability. The new design is completely interchangeable and connectable with the previous one.

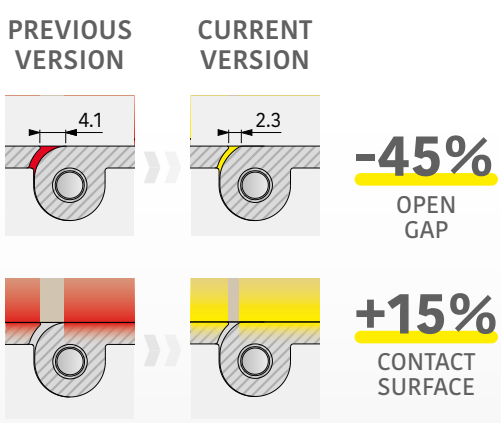

Advantages:
- Improved stability
- Minimized open gap
- Increased sliding surface
- Same backflex radius

820 Catena rettilinea
Straight running chain / Geradegängige Scharnierbandkette

IMPROVED DESIGN

Delivery: Easy | Standard

Pins: Stainless Steel | **Backflex radius min.:** 50 mm

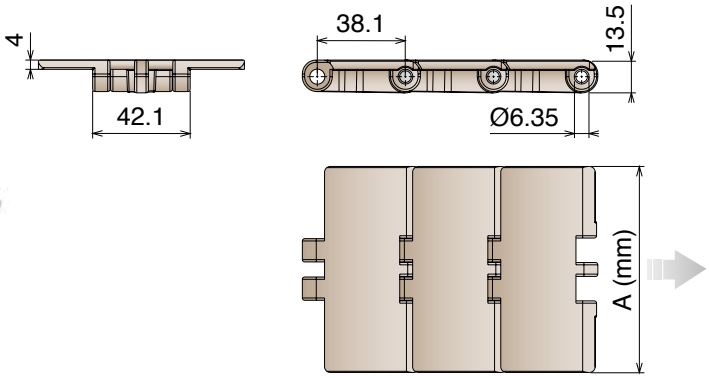

-45% OPEN GAP

+15% CONTACT SURFACE

10 feet 3.048 m | 80 links

84-85-94/108

pg. 651>661

Article-Nr.	Ref.	A (Plate Width) mm	Weight kg/m	Max working load N	Material
11013002	PFX 820 K325	82,5	0,89		
11013003	PFX 820 K330	83,8	0,90		
11013004	PFX 820 K350	88,9	0,91		
11013014	PFX 820 K400	101,6	0,95	1260	PFX
11013005	PFX 820 K450	114,3	1,00		
11013006	PFX 820 K600	152,4	1,22		
11013007	PFX 820 K750	190,5	1,43		
11012502	MPX 820 K325	82,5	0,89		
11012503	MPX 820 K330	83,8	0,90		
11012504	MPX 820 K350	88,9	0,91		
11012514	MPX 820 K400	101,6	0,95	1625	MPX
11012505	MPX 820 K450	114,3	1,00		
11012506	MPX 820 K600	152,4	1,22		
11012507	MPX 820 K750	190,5	1,43		
11011602	DKM 820 K325	82,5	0,89		
11011603	DKM 820 K330	83,8	0,90		
11011604	DKM 820 K350	88,9	0,91		
11011614	DKM 820 K400	101,6	0,95	1625	DKM
11011605	DKM 820 K450	114,3	1,00		
11011606	DKM 820 K600	152,4	1,22		
11011607	DKM 820 K750	190,5	1,43		
11011702	MWX 820 K325	82,5	0,89		
11011703	MWX 820 K330	83,8	0,90		
11011704	MWX 820 K350	88,9	0,91		
11011714	MWX 820 K400	101,6	0,95	1625	MWX
11011705	MWX 820 K450	114,3	1,00		
11011706	MWX 820 K600	152,4	1,22		
11011707	MWX 820 K750	190,5	1,43		

Oadby Core product range

Oadby Available from stock in Leicester | Easy Available from stock in Italy | Standard Produced to order in Italy

820 V

Catena rettilinea
Straight running chain / Geradegängige Scharnierbandkette

IMPROVED DESIGN

Pins: Stainless Steel | **Backflex radius min.:** 50 mm

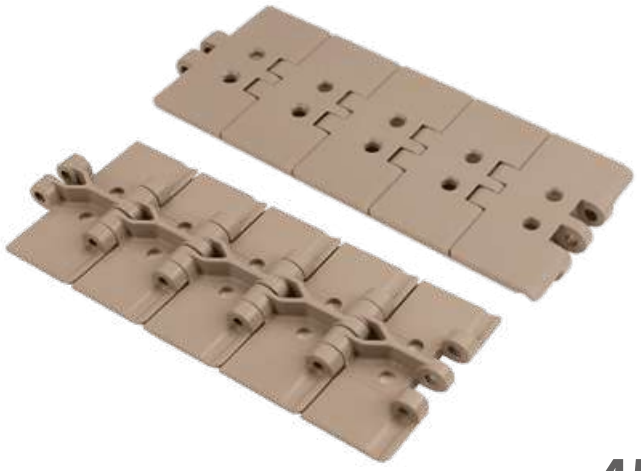

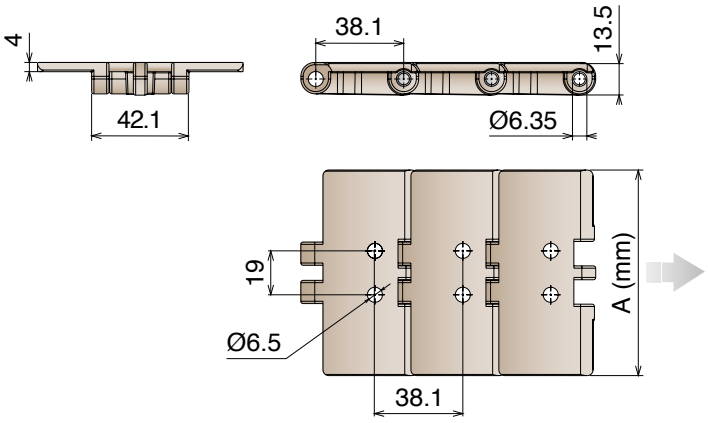

-45% OPEN GAP

+15% CONTACT SURFACE

10 feet 3.048 m | 80 links | 84-85-94/108 | pg. 651>661

Article-Nr.	Ref.	A (Plate Width) mm	Weight kg/m	Max working load N	Material
11550102	LF 820 V2 K325	82,5	0,89	1625	LF
11550105	LF 820 V2 K450	114,3	1,00		

820 *Plastic pin*

Catena rettilinea con perno in plastica
Straight running chain with plastic pin / Geradegängige Scharnierbandkette mit plastic bolzen

IMPROVED DESIGN

Pins: Reinforced acetal resin | **Backflex radius min.:** 50 mm

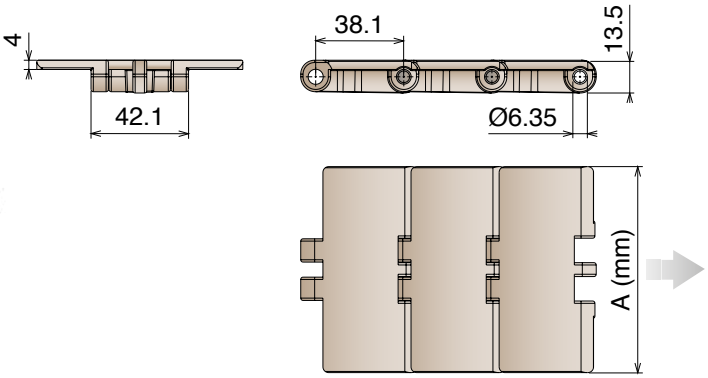

-45% OPEN GAP

+15% CONTACT SURFACE

10 feet 3.048 m | 80 links | 84-85-94/108 | pg. 651>661

Article-Nr.	Ref.	A (Plate Width) mm	Weight kg/m	Max working load N	Material
11630102	LF 820 K325	82,5	0,69	650	LF
11630105	LF 820 K450	114,3	0,80		

828 Catena rettilinea
Straight running chain / Geradegängige Scharnierbandkette

Delivery: Easy | Standard — **Pins:** Stainless Steel | **Backflex radius min.:** 50 mm

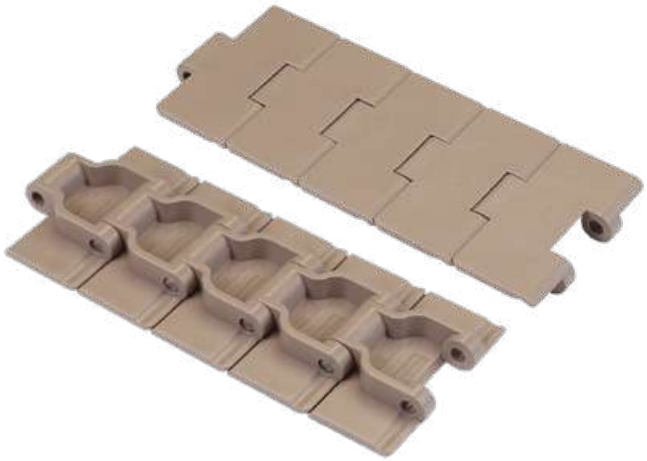

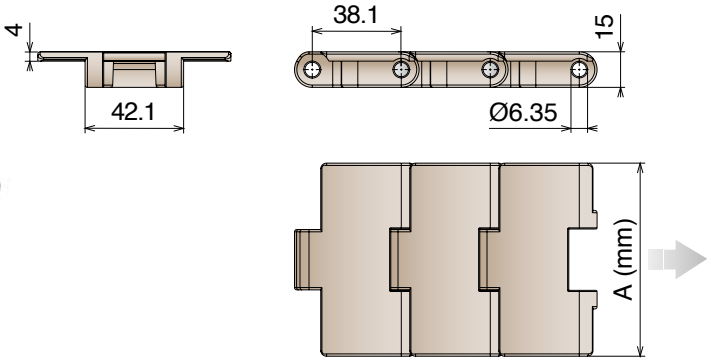

10 feet 3.048 m — 80 links | pg. 88-89/108 | pg. 651>661

Article-Nr.	Ref.	A (Plate Width) mm	Weight kg/m	Max working load N	Material
11020102	LF 828 K325	82,5	1,07	2320	LF
11020103	LF 828 K330	83,8	1,13		
11020302	MX 828 K325	82,5	1,07	1860	MX
11020303	MX 828 K330	83,8	1,13		
11023002	PFX 828 K325	82,5	1,07	1860	PFX
11023003	PFX 828 K330	83,8	1,13		
11022502	MPX 828 K325	82,5	1,07	2320	MPX
11022503	MPX 828 K330	83,8	1,13		

Oadby Core product range
Oadby Available from stock in Leicester | Easy Available from stock in Italy | Standard Produced to order in Italy

Movex®

831 Catena rettilinea
Straight running chain / Geradegängige Scharnierbandkette

Delivery: Easy | Standard

Pins: Stainless Steel | **Backflex radius min.:** 50 mm

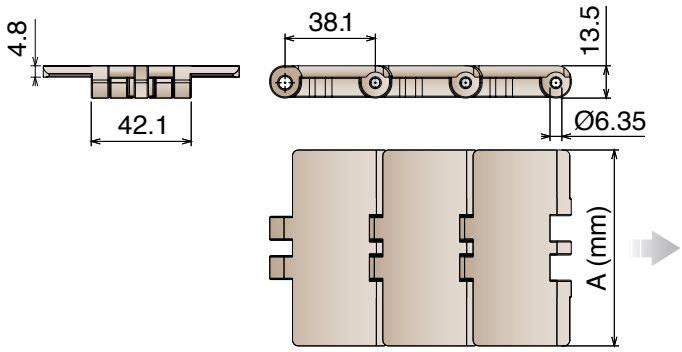

10 feet
3.048 m
80 links

pg. 86-87/108
pg. 651>661

Article-Nr.	Ref.	A (Plate Width) mm	Weight kg/m	Max working load N	Material
11030102	LF 831 K325	82,5	1,00	1625	LF
11030105	LF 831 K450	114,3	1,28		
11030107	LF 831 K750	190,5	1,80		
11030302	MX 831 K325	82,5	1,00	1260	MX
11030305	MX 831 K450	114,3	1,28		
11030307	MX 831 K750	190,5	1,80		

821 Catena rettilinea
Straight running chain / Geradegängige Scharnierbandkette

Delivery: Easy | Standard — **Pins:** Stainless Steel | **Backflex radius min.:** 50 mm

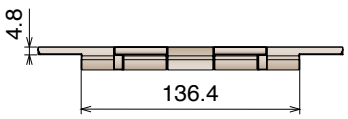

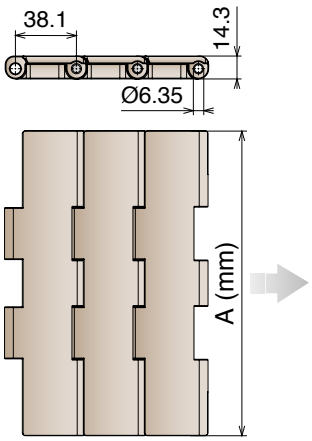

10 feet 3.048 m — 80 links | pg. 82/109 | pg. 651>661

Article-Nr.	Ref.	A (Plate Width) mm	Weight kg/m	Max working load N	Material
11040107	LF 821 K750	190,5	2,55	2770	LF
11040108	LF 821 K1000	254,0	3,05		
11040109	LF 821 K1200	304,8	3,35		
11040307	MX 821 K750	190,5	2,55	2200	MX
11040308	MX 821 K1000	254,0	3,05		
11040309	MX 821 K1200	304,8	3,35		
11042507	MPX 821 K750	190,5	2,55	2770	MPX
11042508	MPX 821 K1000	254,0	3,05		
11042509	MPX 821 K1200	304,8	3,35		

Oadby Core product range
Oadby Available from stock in Leicester | Easy Available from stock in Italy | Standard Produced to order in Italy

Movex

821 GT

Catena rettilinea
Straight running chain / Geradegängige Scharnierbandkette

Delivery: Easy | Standard

Pins: Stainless Steel | **Backflex radius min.:** 50 mm | **TPE Rubber:** 50 ShA

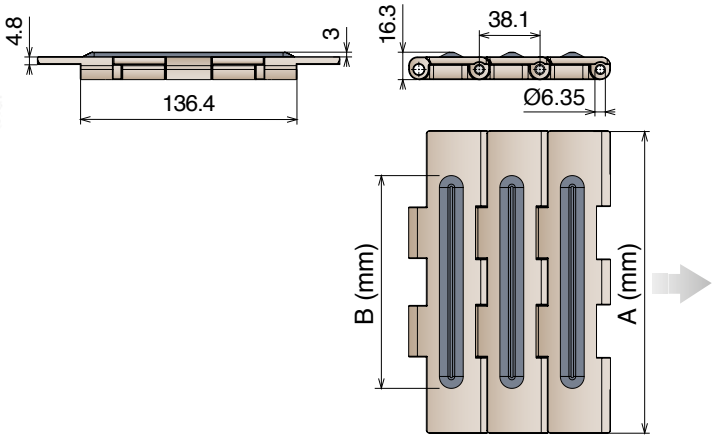

5 feet
1.524 m
40 links

pg. 82/109
pg. 651>661

Article-Nr.	Ref.	A (Plate Width) mm	B (Rubber Width) mm	Weight kg/m	Max working load N	Material
11050107	LF 821 GT K750	190,5	134,0	2,55	2770	LF
11050108	LF 821 GT K1000	254,0	192,0	3,05		
11050109	LF 821 GT K1200	304,8	252,0	3,35		
11050307	MX 821 GT K750	190,5	134,0	2,55	2200	MX
11050308	MX 821 GT K1000	254,0	192,0	3,05		
11050309	MX 821 GT K1200	304,8	252,0	3,35		

821 LBP

Catena rettilinea
Straight running chain / Geradegängige Scharnierbandkette

Delivery: Easy | Standard — **Pins:** Stainless Steel | **Backflex radius min.:** 150 mm

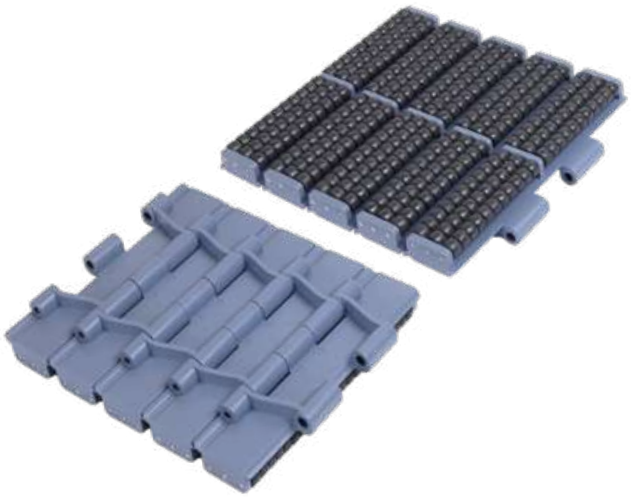

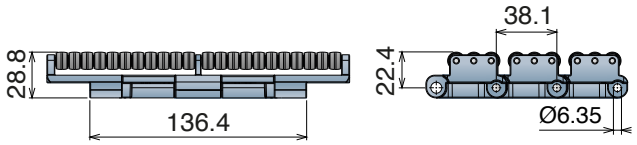

K750

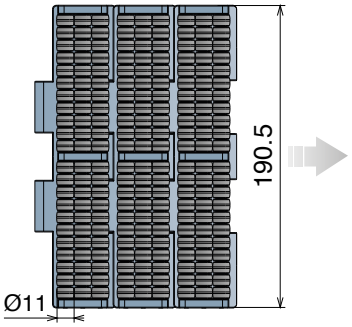

K1000

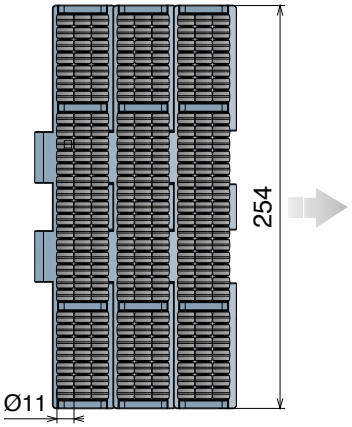

K1200

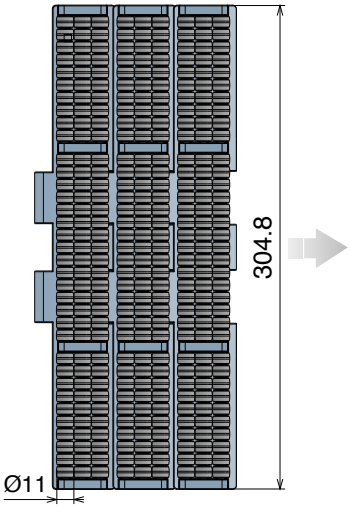

5 feet
1.524 m
40 links

pg. 82/109
pg. 651>661

Article-Nr.	Ref.	Plate Width mm	Weight kg/m	Max working load N	Material
11060107	LFA 821 LBP K750	190,5	5,70	2770	LFA
11060108	LFA 821 LBP K1000	254,0	7,05		
11060109	LFA 821 LBP K1200	304,8	8,21		

Oadby Core product range
Oadby Available from stock in Leicester
Easy Available from stock in Italy
Standard Produced to order in Italy

8257 Catena rettilinea

Straight running chain / Geradegängige Scharnierbandkette

Delivery: Easy Standard | **Pins:** Stainless Steel | **Backflex radius min.:** 50 mm

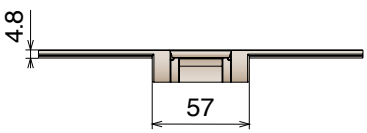

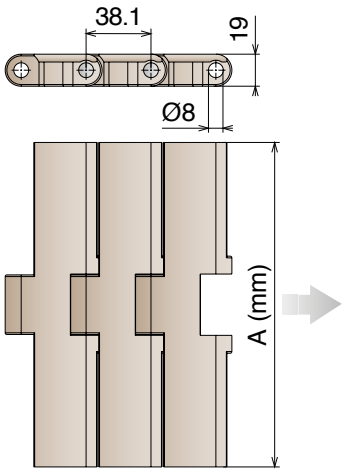

10 feet 3.048 m — 80 links

pg. 90-91/110

pg. 651>661

Article-Nr.	Ref.	A (Plate Width) mm	Weight kg/m	Max working load N	Material
11070107	LF 8257 K750	190,5	2,55	3830	LF
11070108	LF 8257 K1000	254,0	3,05		
11070109	LF 8257 K1200	304,8	3,35		
11070307	MX 8257 K750	190,5	2,55	3050	MX
11070308	MX 8257 K1000	254,0	3,05		
11070309	MX 8257 K1200	304,8	3,35		

8257 GT

Catena rettilinea
Straight running chain / Geradegängige Scharnierbandkette

Delivery: Easy | Standard

Pins: Stainless Steel | **Backflex radius min.:** 50 mm | **TPE Rubber:** 50 ShA

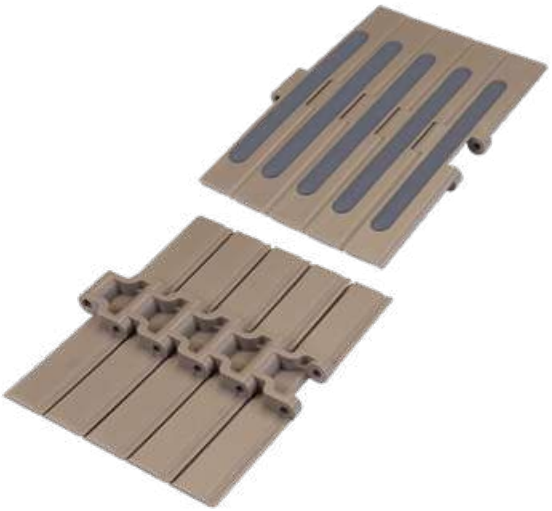

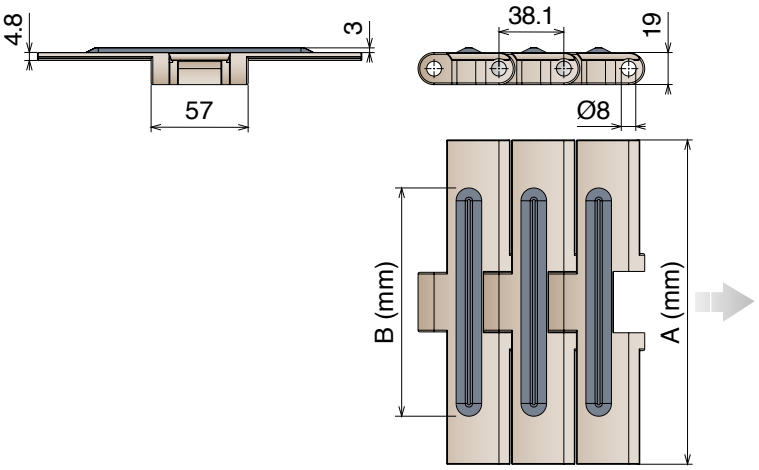

5 feet
1.524 m
40 links

pg. 90-91/110
pg. 651>661

Article-Nr.	Ref.	A (Plate Width) mm	B (Rubber Width) mm	Weight kg/m	Max working load N	Material
11080107	LF 8257 GT K750	190,5	134,0	2,55	3830	LF
11080108	LF 8257 GT K1000	254,0	192,0	2,60		
11080109	LF 8257 GT K1200	304,8	252,0	2,95		

Oadby Core product range
Oadby Available from stock in Leicester | Easy Available from stock in Italy | Standard Produced to order in Italy

Movex®

8257 LBP

Catena rettilinea
Straight running chain / Geradegängige Scharnierbandkette

Delivery: Easy | Standard

Pins: Stainless Steel | **Backflex radius min.:** 200 mm

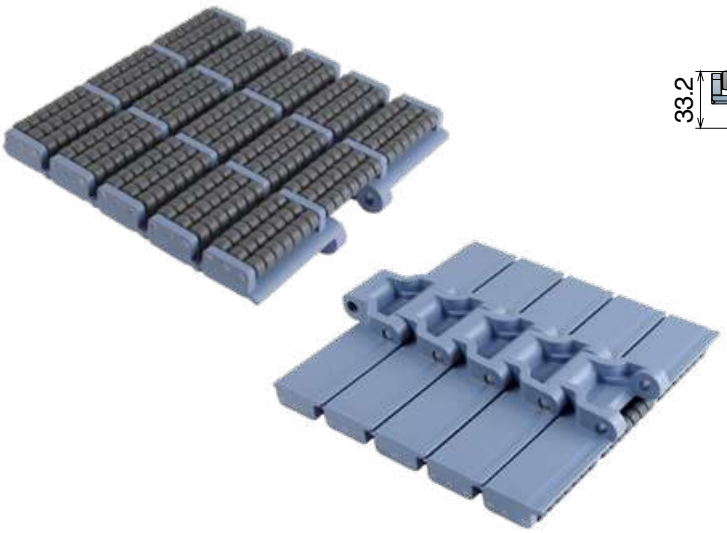

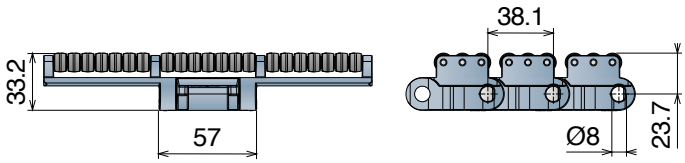

K750

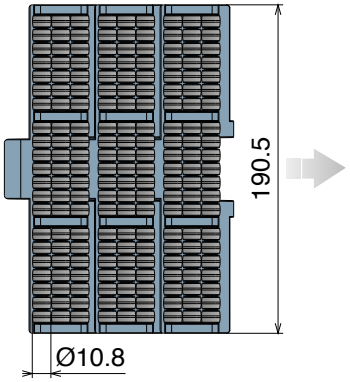

K1000

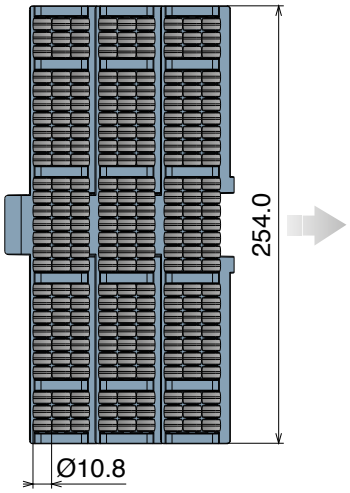

K1200

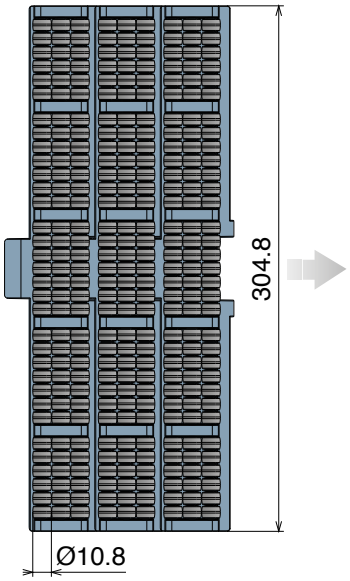

5 feet
1.524 m
40 links

pg. 90-91/110
pg. 651>661

Article-Nr.	Ref.	A (Plate Width) mm	Weight kg/m	Max working load N	Material
11090107	LFA 8257 LBP K750	190,5	5,65	3830	LFA
11090108	LFA 8257 LBP K1000	254,0	7,16		
11090109	LFA 8257 LBP K1200	304,8	8,05		

878 TAB

Catena curvilinea
Sideflexing chain / Kurvengängige Scharnierbandkette

Delivery: Easy | Standard

Pins: Stainless Steel | **Backflex radius min.:** 50 mm

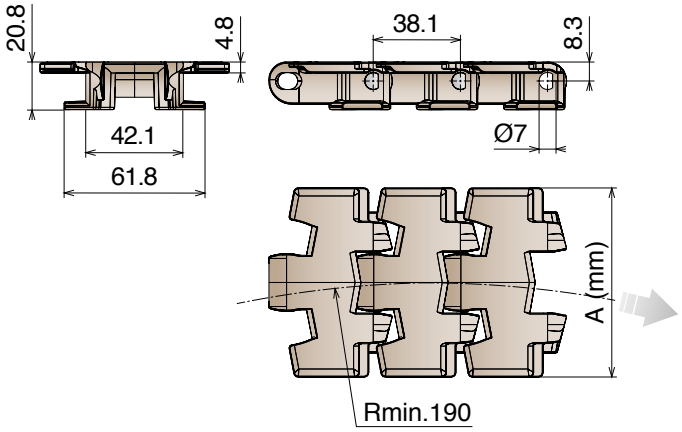

TAB SYSTEM

10 feet 3.048 m — 80 links | pg. 88-89 | pg. 103-104 | pg. 164/175 | pg. 651>661

Article-Nr.	Ref.	A (Plate Width) mm	Weight kg/m	Max working load N	Material
11190102	LF 878 TAB K325	82,5	1,06	2200	LF
11190105	LF 878 TAB K450	114,3	1,18		
11190302	MX 878 TAB K325	82,5	1,06	1750	MX
11190305	MX 878 TAB K450	114,3	1,18		
11191602	DKM 878 TAB K325	82,5	1,06	2200	DKM
11191605	DKM 878 TAB K450	114,3	1,18		

Oadby Core product range
Oadby Available from stock in Leicester | Easy Available from stock in Italy | Standard Produced to order in Italy

Movex®

879 M

Catena curvilinea
Sideflexing chain / Kurvengängige Scharnierbandkette

Delivery: Easy | Standard

Pins: Ferritic Stainless Steel | **Backflex radius min.:** 50 mm

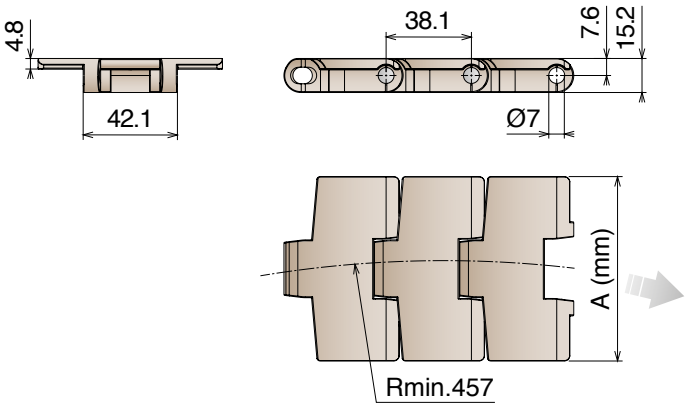

MAGNETIC SYSTEM

10 feet 3.048 m
80 links

pg. 88-89/108
pg. 115->128
pg. 651->661

Article-Nr.	Ref.	A (Plate Width) mm	R mm	Weight kg/m	Max working load N	Material
11240102	LF 879 M K325	82,5	457	1,05	2200	LF
11240105	LF 879 M K450	114,3	457	1,15		
11240302	MX 879 M K325	82,5	457	1,05	1750	MX
11240305	MX 879 M K450	114,3	457	1,15		

879 TAB

Catena curvilinea
Sideflexing chain / Kurvengängige Scharnierbandkette

Delivery: Easy | Standard

Pins: Stainless Steel | **Backflex radius min.:** 50 mm

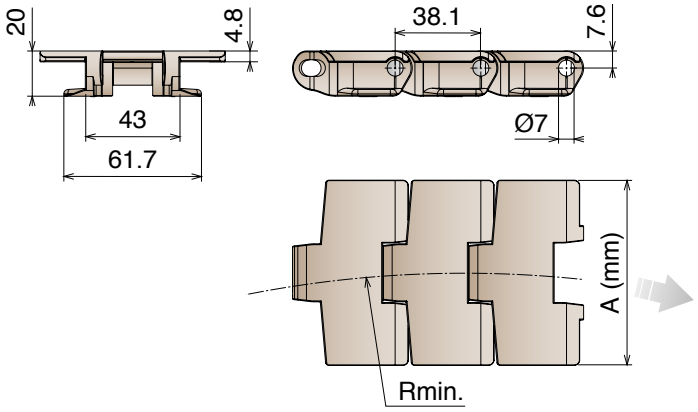

TAB SYSTEM

10 feet
3.048 m
80 links

pg. 88-89/108
pg. 163-175
pg. 651>661

Article-Nr.	Ref.	A (Plate Width) mm	R mm	Weight kg/m	Max working load N	Material
11250102	LF 879 TAB K325	82,5	457	1,01	2200	LF
11250105	LF 879 TAB K450	114,3	610	1,13		
11250302	MX 879 TAB K325	82,5	457	1,01	1750	MX
11250305	MX 879 TAB K450	114,3	610	1,13		
11252502	MPX 879 TAB K325	82,5	457	1,01	2200	MPX
11252505	MPX 879 TAB K450	114,3	610	1,13		
11251702	MWX 879 TAB K325	82,5	457	1,01	2200	MWX
11251705	MWX 879 TAB K450	114,3	610	1,13		

Oadby Core product range
Oadby Available from stock in Leicester
Easy Available from stock in Italy
Standard Produced to order in Italy

Movex

888 TAB

Catena curvilinea
Sideflexing chain / Kurvengängige Scharnierbandkette

Pins: Stainless Steel | **Backflex radius min.:** 150 mm

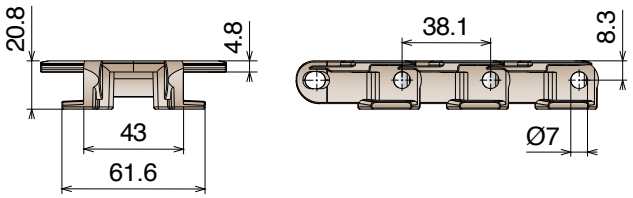

W80

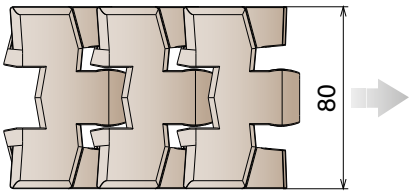

W140

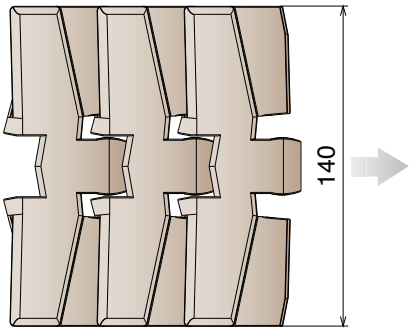

W200

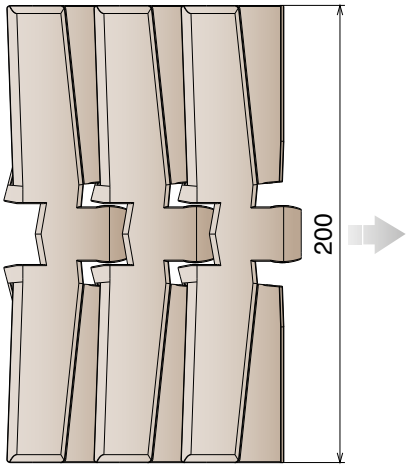

TAB SYSTEM

10 feet 3.048 m				
80 links	pg. 88-89	pg. 103-104	pg. 165-175	pg. 651>661

Article-Nr.	Ref.	Plate Width mm	R mm	Weight kg/m	Max working load N	Material
11700119	LF 888 TAB W80	80,0	200	1,05	2200	LF
11700120	LF 888 TAB W140	140,0	500	1,32		
11700121	LF 888 TAB W200	200,0	500	1,62		

888 TAB GT

Catena curvilinea
Sideflexing chain / Kurvengängige Scharnierbandkette

Pins: Stainless Steel | **Backflex radius min.:** 150 mm | **TPE Rubber:** 75 ShA

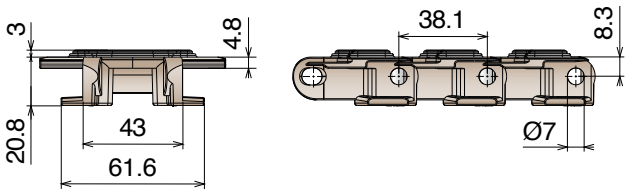

W80

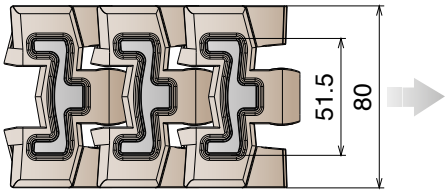

W140

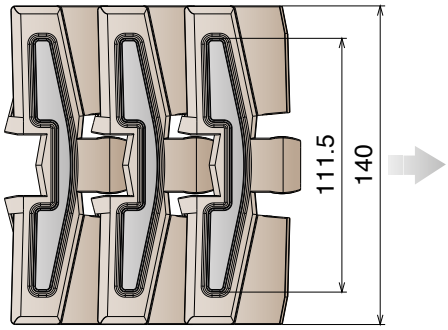

W200

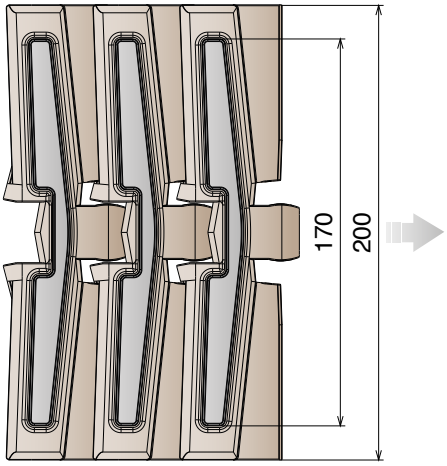

TAB SYSTEM

10 feet 3.048 m | 80 links | pg. 88-89 | pg. 103-104 | pg. 165/175 | pg. 651>661

Article-Nr.	Ref.	Plate Width mm	R mm	Weight kg/m	Max working load N	Material
11710119	LF 888 TAB GT W80	80,0	200	1,15	2200	LF
11710120	LF 888 TAB GT W140	140,0	500	1,43		
11710121	LF 888 TAB GT W200	200,0	500	1,75		

Oadby Core product range
Oadby Available from stock in Leicester | Easy Available from stock in Italy | Standard Produced to order in Italy

880 M

Catena curvilinea
Sideflexing chain / Kurvengängige Scharnierbandkette

Delivery: Easy | Standard

Pins: Ferritic Stainless Steel | **Backflex radius min.:** 50 mm

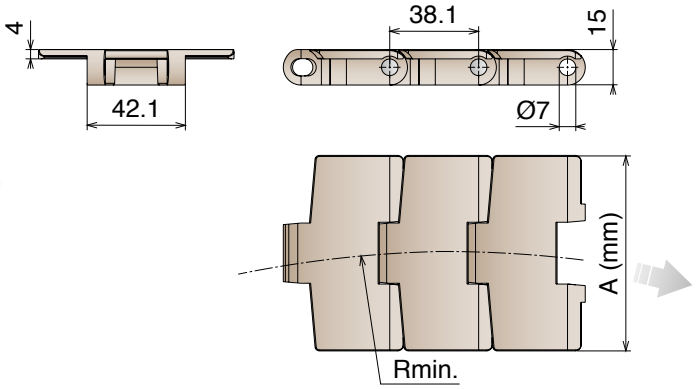

MAGNETIC SYSTEM

10 feet
3.048 m
80 links

pg. 88-89/108
pg. 115>128
pg. 651>661

Article-Nr.	Ref.	A (Plate Width) mm	R mm	Weight kg/m	Max working load N	Material
11100102	LF 880 M K325	82,5	457	1,05	2200	LF
11100103	LF 880 M K330	83,8	457	1,09		
11100105	LF 880 M K450	114,3	457	1,15		
11100302	MX 880 M K325	82,5	457	1,05	1750	MX
11100303	MX 880 M K330	83,8	457	1,09		
11100305	MX 880 M K450	114,3	457	1,15		
11103002	PFX 880 M K325	82,5	457	1,05	1750	PFX
11103003	PFX 880 M K330	83,8	457	1,09		
11103005	PFX 880 M K450	114,3	457	1,15		
11102502	MPX 880 M K325	82,5	457	1,05	2200	MPX
11102503	MPX 880 M K330	83,8	457	1,09		
11102505	MPX 880 M K450	114,3	457	1,15		
11101702	MWX 880 M K325	82,5	457	1,05	2200	MWX
11101703	MWX 880 M K330	83,8	457	1,09		
11101705	MWX 880 M K450	114,3	457	1,15		

880 TAB

Catena curvilinea
Sideflexing chain / Kurvengängige Scharnierbandkette

Delivery: Easy | Standard

Pins: Stainless Steel | **Backflex radius min.:** 40 mm

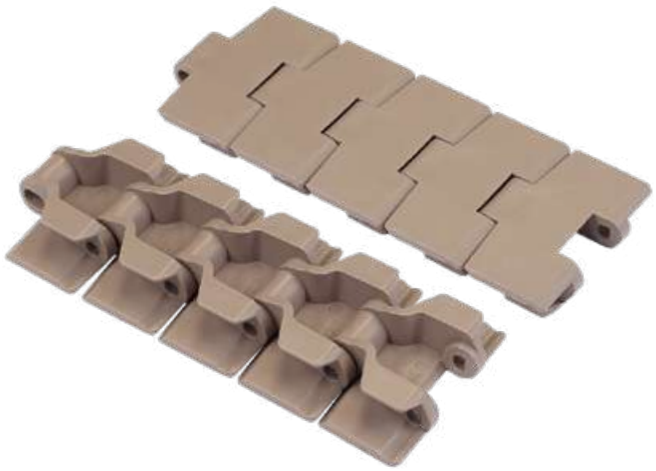

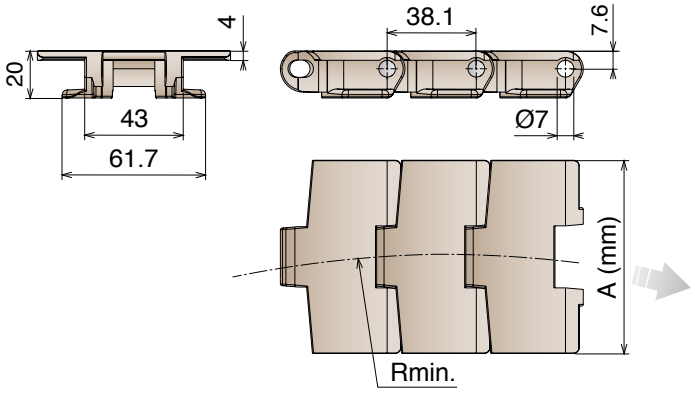

TAB SYSTEM

10 feet 3.048 m — 80 links | pg. 88-89 | pg. 163/175 | pg. 651>661

Article-Nr.	Ref.	A (Plate Width) mm	R mm	Weight kg/m	Max working load N	Material
11110102	LF 880 TAB K325	82,5	457	1,015	2200	LF
11110103	LF 880 TAB K330	83,8	457	1,018		
11110105	LF 880 TAB K450	114,3	457	1,09		
11110302	MX 880 TAB K325	82,5	457	1,015	1750	MX
11110303	MX 880 TAB K330	83,8	457	1,018		
11110305	MX 880 TAB K450	114,3	457	1,09		
11113002	PFX 880 TAB K325	82,5	457	1,015	1750	PFX
11113003	PFX 880 TAB K330	83,8	457	1,018		
11113005	PFX 880 TAB K450	114,3	457	1,09		
11112502	MPX 880 TAB K325	82,5	457	1,015	2200	MPX
11112503	MPX 880 TAB K330	83,8	457	1,018		
11112505	MPX 880 TAB K450	114,3	457	1,09		
11111602	DKM 880 TAB K325	82,5	457	1,015	2200	DKM
11111603	DKM 880 TAB K330	83,8	457	1,018		
11111605	DKM 880 TAB K450	114,3	457	1,09		
11111702	MWX 880 TAB K325	82,5	457	1,015	2200	MWX
11111703	MWX 880 TAB K330	83,8	457	1,018		
11111705	MWX 880 TAB K450	114,3	457	1,09		

Oadby Core product range
Oadby Available from stock in Leicester | Easy Available from stock in Italy | Standard Produced to order in Italy

Movex

880 V TAB

Catena curvilinea
Sideflexing chain / Kurvengängige Scharnierbandkette

Delivery: Easy | Standard

Pins: Stainless Steel | **Backflex radius min.:** 40 mm

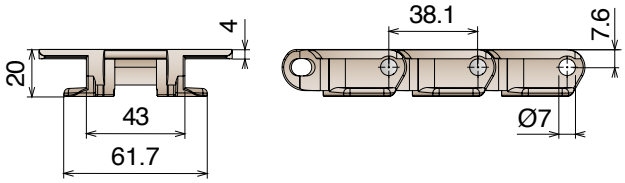

V1

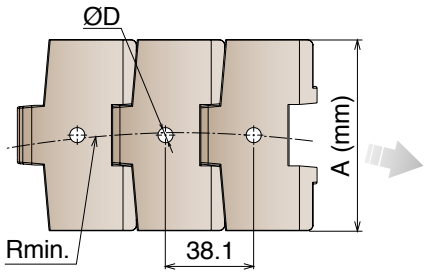

V2

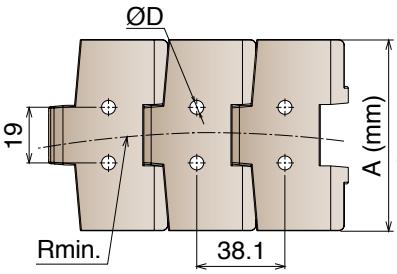

V3

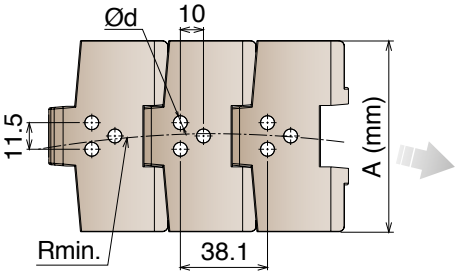

V4

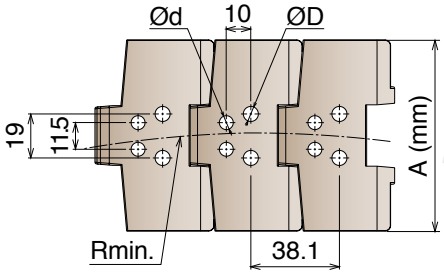

V5

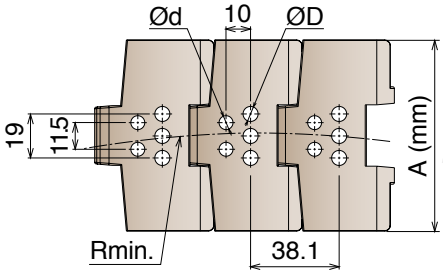

TAB SYSTEM

10 feet 3.048 m — 80 links | pg. 88-89 | pg. 163/175 | pg. 651>661

Article-Nr.	Ref.	A (Plate Width) mm	R mm	Weight kg/m	ØD mm	Ød mm	Max working load N	Material
11560102	LF 880 V1 K325	82,5	457	1,015	6,5	6	2200	LF
11570102	LF 880 V2 K325	82,5	457	1,015				
11580102	LF 880 V3 K325	82,5	457	1,015				
11560102-V4	LF 880 V4 K325	82,5	457	1,015				
11560102-V5	LF 880 V5 K325	82,5	457	1,015				
11570105	LF 880 V2 K450	114,3	457	1,09				

880 TAB *Plastic pin* Catena curvilinea con perno in plastica

Sideflexing chain with plastic pin / Kurvengängige Scharnierbandkette mit plastic bolzen

Pins: Reinforced acetal resin | **Backflex radius min.:** 40 mm

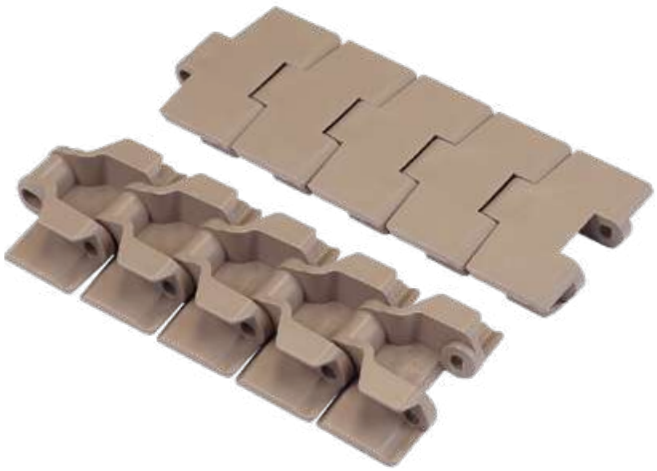

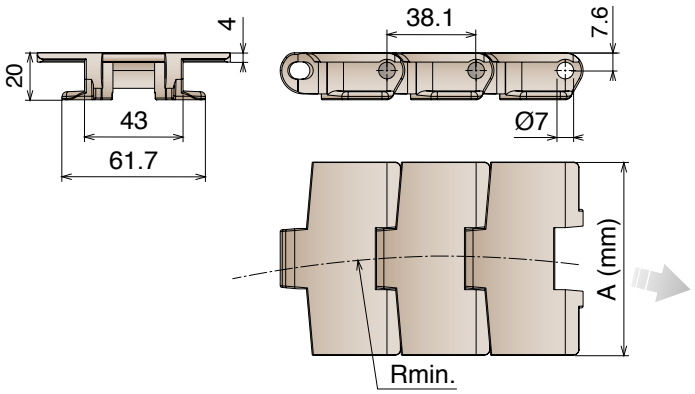

TAB SYSTEM

10 feet 3.048 m | 80 links | pg. 88-89 | pg. 163/175 | pg. 651>661

Article-Nr.	Ref.	A (Plate Width) mm	R mm	Weight kg/m	Max working load N	Material
11660102	LF 880 TAB K325	82,5	457	0,815	550	LF
11660105	LF 880 TAB K450	114,3	457	0,89		

880 TAB BO Catena curvilinea

Sideflexing chain / Kurvengängige Scharnierbandkette

Delivery: Easy Standard

Pins: Stainless Steel | **Backflex radius min.:** 40 mm

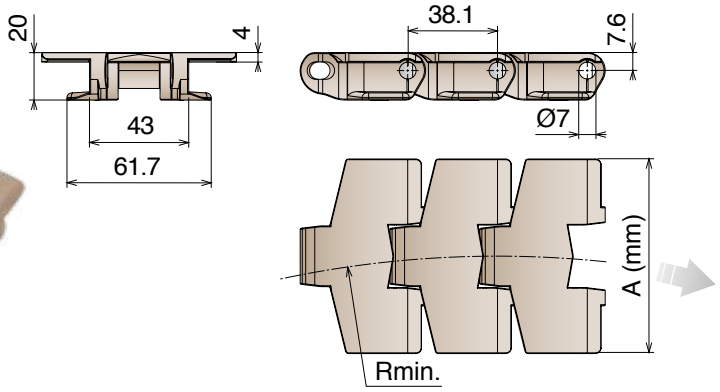

TAB SYSTEM

10 feet 3.048 m | 80 links | pg. 88-89 | pg. 164/175 | pg. 651>661

Article-Nr.	Ref.	A (Plate Width) mm	R mm	Weight kg/m	Max working load N	Material
11260102	LF 880 TAB BO K325	82,5	190	0,96	1680	LF
11260105	LF 880 TAB BO K450	114,3	190	1,10		
11260302	MX 880 TAB BO K325	82,5	190	0,96	1350	MX
11260305	MX 880 TAB BO K450	114,3	190	1,10		

Oadby Core product range
Oadby Available from stock in Leicester | Easy Available from stock in Italy | Standard Produced to order in Italy

880 B

Catena curvilinea
Sideflexing chain / Kurvengängige Scharnierbandkette

Delivery: Easy | Standard

Pins: Stainless Steel | **Backflex radius min.:** 40 mm

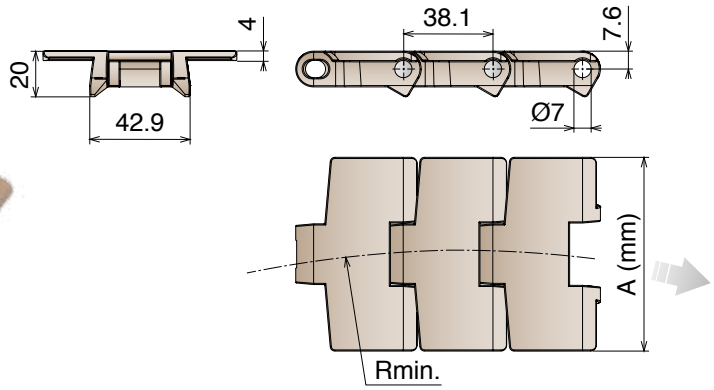

BEVEL SYSTEM

10 feet
3.048 m
80 links

pg. 88-89
pg. 174
pg. 651>661

Article-Nr.	Ref.	A (Plate Width) mm	R mm	Weight kg/m	Max working load N	Material
11120102	LF 880 B K325	82,5	457	0,89	2200	LF
11120104	LF 880 B K350	88,9	457	0,93		
11120105	LF 880 B K450	114,3	457	1,05		
11120302	MX 880 B K325	82,5	457	0,89	1750	MX
11120304	MX 880 B K350	88,9	457	0,93		
11120305	MX 880 B K450	114,3	457	1,05		

882 M

Catena curvilinea
Sideflexing chain / Kurvengängige Scharnierbandkette

Delivery: Easy | Standard

Pins: Ferritic Stainless Steel | **Backflex radius min.:** 50 mm

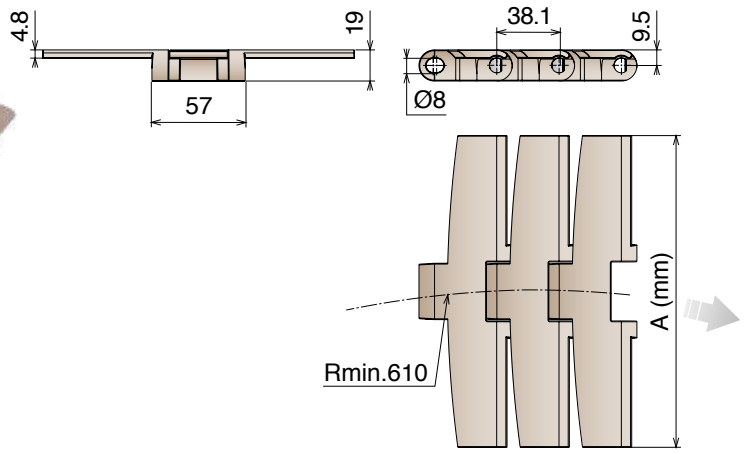

MAGNETIC SYSTEM

10 feet
3.048 m
80 links

pg. 90-91/110
pg. 131->136
pg. 651>661

Article-Nr.	Ref.	A (Plate Width) mm	Weight kg/m	Max working load N	Material
11130107	LF 882 M K750	190,5	2,14	3830	LF
11130108	LF 882 M K1000	254,0	2,45		
11130109	LF 882 M K1200	304,8	2,68		
11130307	MX 882 M K750	190,5	2,14	3050	MX
11130308	MX 882 M K1000	254,0	2,45		
11130309	MX 882 M K1200	304,8	2,68		

Oadby Core product range
Oadby Available from stock in Leicester
Easy Available from stock in Italy
Standard Produced to order in Italy
Movex

882 M GT

Catena curvilinea
Sideflexing chain / Kurvengängige Scharnierbandkette

Delivery: Easy Standard | **Pins:** Ferritic Stainless Steel | **Backflex radius min.:** 50 mm | **TPE Rubber:** 50 ShA

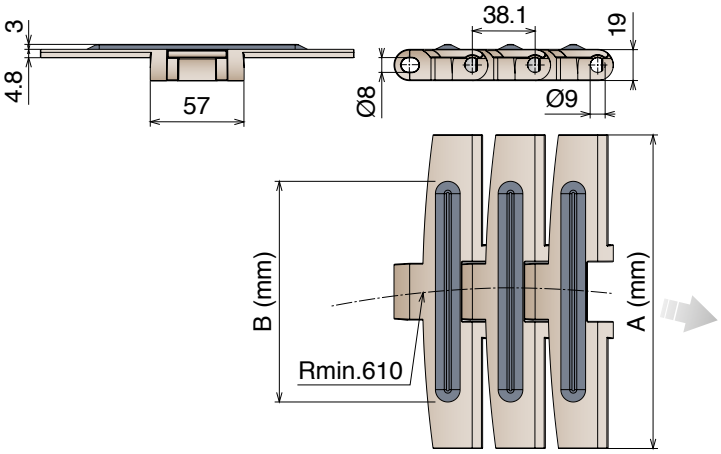

MAGNETIC SYSTEM

5 feet 1.524 m
40 links

pg. 90-91/110
pg. 131->136
pg. 651>661

Article-Nr.	Ref.	A (Plate Width) mm	B (Rubber Width) mm	Weight kg/m	Max working load N	Material
11150107	LF 882 M GT K750	190,5	134,0	2,10	3830	LF
11150108	LF 882 M GT K1000	254,0	197,0	2,45		
11150109	LF 882 M GT K1200	304,8	249,0	2,74		

882 M LBP

Catena curvilinea
Sideflexing chain / Kurvengängige Scharnierbandkette

Delivery: Easy | Standard

Pins: Ferritic Stainless Steel | **Backflex radius min.:** 150 mm

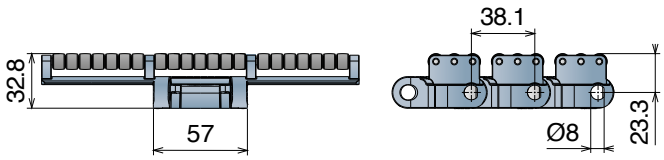

K750

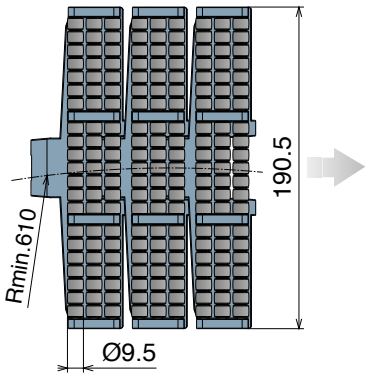

K1000

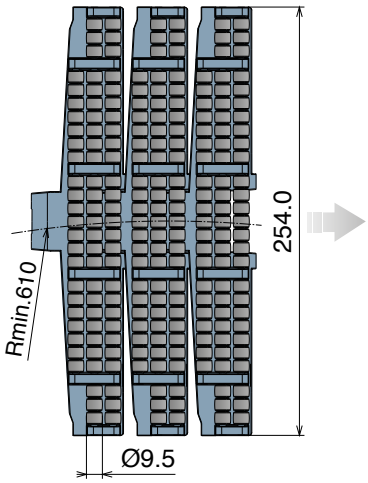

K1200

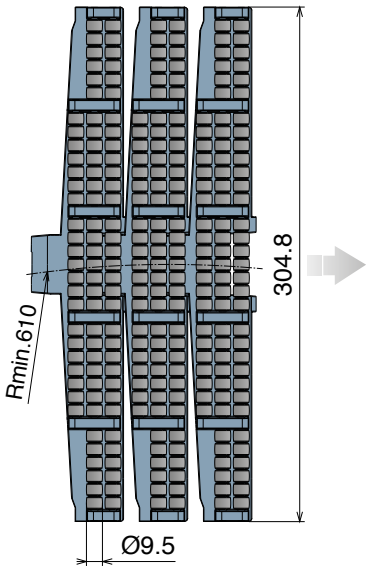

MAGNETIC SYSTEM

5 feet
1.524 m
40 links

pg. 90-91/110
pg. 137->140
pg. 651>661

Article-Nr.	Ref.	A (Plate Width) mm	Weight kg/m	Max working load N	Material
11170107	LFA 882 M LBP K750	190,5	3,92	3830	LFA
11170108	LFA 882 M LBP K1000	254,0	4,94		
11170109	LFA 882 M LBP K1200	304,8	5,82		

Oadby Core product range
Oadby Available from stock in Leicester
Easy Available from stock in Italy
Standard Produced to order in Italy

Movex

882 TAB

Catena curvilinea
Sideflexing chain / Kurvengängige Scharnierbandkette

Delivery: Easy | Standard

Pins: Stainless Steel | **Backflex radius min.:** 40 mm

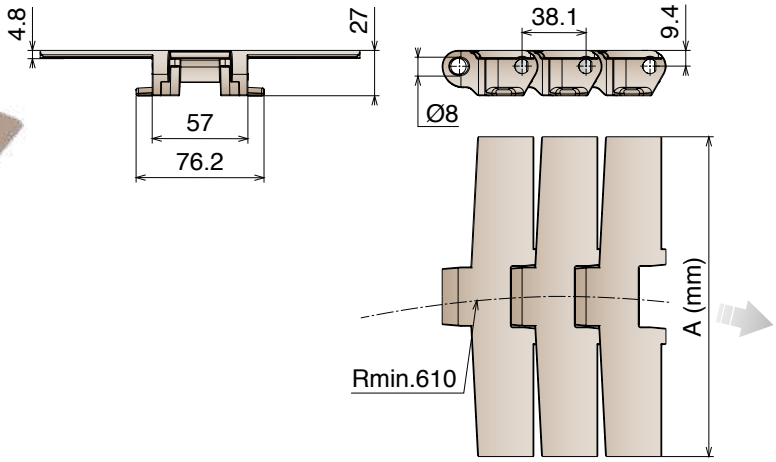

TAB SYSTEM

10 feet 3.048 m — 80 links | pg. 90-91/110 | pg. 166/175 | pg. 651>661

Article-Nr.	Ref.	A (Plate Width) mm	Weight kg/m	Max working load N	Material
11140105	LF 882 TAB K450	114,3	2,05	3830	LF
11140106	LF 882 TAB K600	152,4	2,20		
11140107	LF 882 TAB K750	190,5	2,45		
11140108	LF 882 TAB K1000	254,0	2,85		
11140109	LF 882 TAB K1200	304,8	3,40		
11140305	MX 882 TAB K450	114,3	2,05	3050	MX
11140306	MX 882 TAB K600	152,4	2,20		
11140307	MX 882 TAB K750	190,5	2,45		
11140308	MX 882 TAB K1000	254,0	2,85		
11140309	MX 882 TAB K1200	304,8	3,40		
11142505	MPX 882 TAB K450	114,3	2,05	3830	MPX
11142506	MPX 882 TAB K600	152,4	2,20		
11142507	MPX 882 TAB K750	190,5	2,45		
11142508	MPX 882 TAB K1000	254,0	2,85		
11142509	MPX 882 TAB K1200	304,8	3,40		
11141705	MWX 882 TAB K450	114,3	2,05	3830	MWX
11141706	MWX 882 TAB K600	152,4	2,20		
11141707	MWX 882 TAB K750	190,5	2,45		
11141708	MWX 882 TAB K1000	254,0	2,85		
11141709	MWX 882 TAB K1200	304,8	3,40		

882 TAB GT

Catena curvilinea
Sideflexing chain / Kurvengängige Scharnierbandkette

Delivery: Easy | Standard — **Pins:** Stainless Steel | **Backflex radius min.:** 40 mm | **TPE Rubber:** 50 ShA

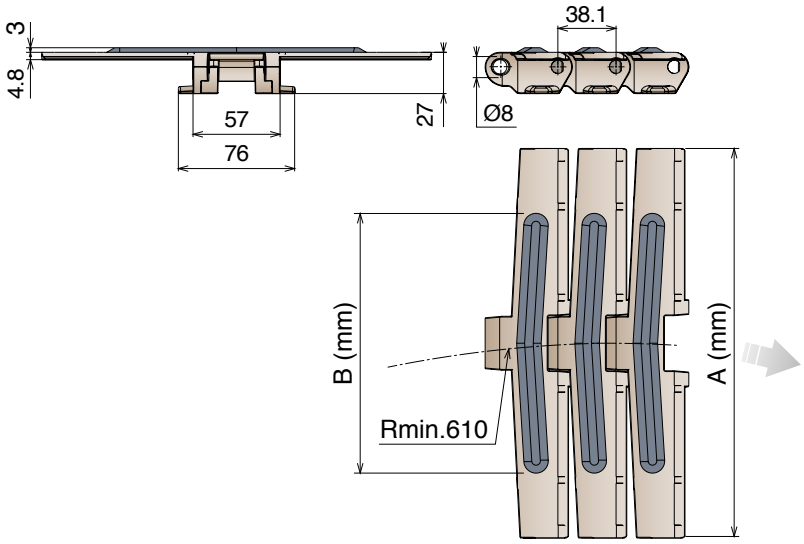

TAB SYSTEM

5 feet 1.524 m — 40 links | pg. 90-91/110 | pg. 166/175 | pg. 651>661

Article-Nr.	Ref.	A (Plate Width) mm	B (Rubber Width) mm	Weight kg/m	Max working load N	Material
11160107	LF 882 TAB GT K750	190,5	134,0	2,37	3830	LF
11160108	LF 882 TAB GT K1000	254,0	197,0	2,67		
11160109	LF 882 TAB GT K1200	304,8	249,0	2,92		
11160307	MX 882 TAB GT K750	190,5	134,0	2,37	3050	MX
11160308	MX 882 TAB GT K1000	254,0	197,0	2,67		
11160309	MX 882 TAB GT K1200	304,8	249,0	2,92		

882 TAB LBP

Catena curvilinea
Sideflexing chain / Kurvengängige Scharnierbandkette

Delivery: Easy | Standard

Pins: Stainless Steel | **Backflex radius min.:** 150 mm

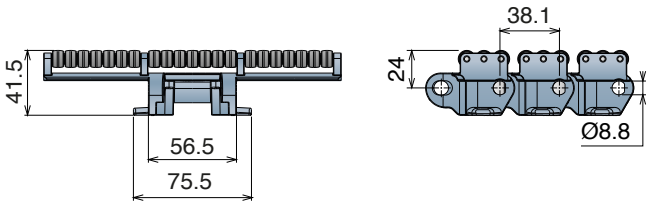

K450

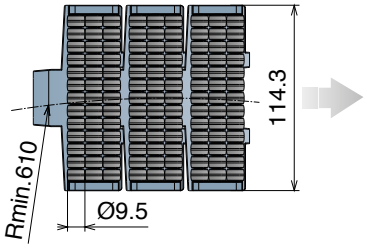

K750

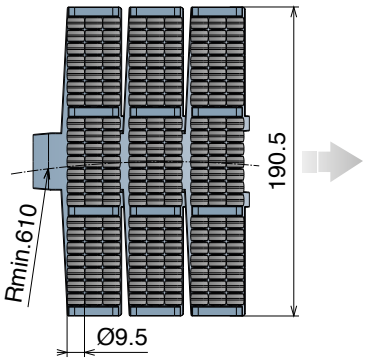

K1000

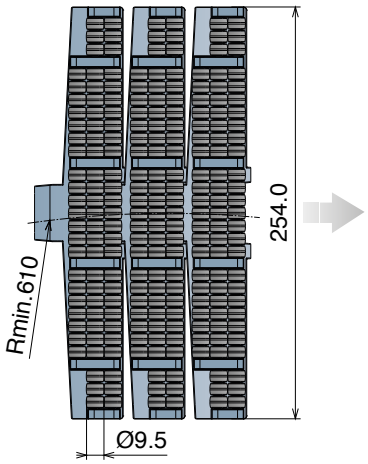

K1200

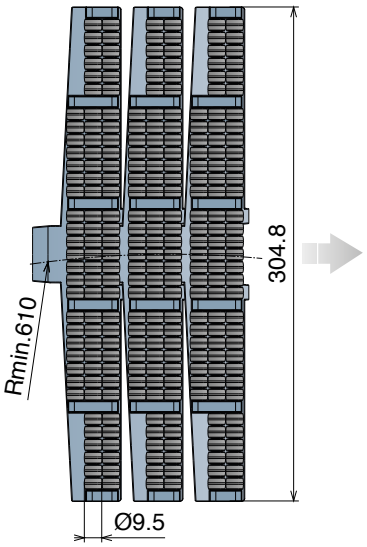

TAB SYSTEM

5 feet 1.524 m			
40 links	pg. 90-91/110	pg. 166/175	pg. 651>661

Article-Nr.	Ref.	Plate Width mm	Weight kg/m	Max working load N	Material
11180105	LFA 882 TAB LBP K450	114,3	4,00	3830	LFA
11180107	LFA 882 TAB LBP K750	190,5	4,70		
11180108	LFA 882 TAB LBP K1000	254,0	5,95		
11180109	LFA 882 TAB LBP K1200	304,8	6,55		

1873 Catena curvilinea
Sideflexing chain / Kurvengängige Plattenbandkette

Delivery: Easy Standard — *The stainless steel version is supplied with LONG-LIFE SS roller chain.* | **Backflex radius min.:** 210 mm

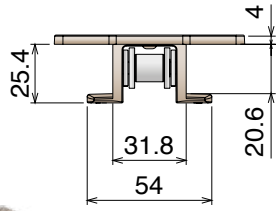

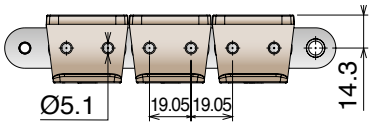

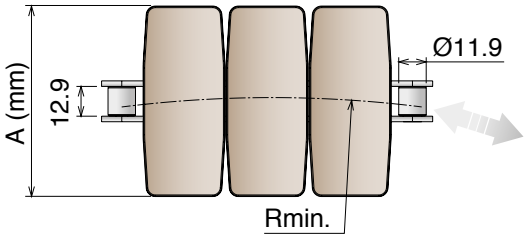

Standard lenght roller chain: 160 Pitches

TAB SYSTEM

10 feet 3.048 m — 80 flights

SPROCKET ASA 60 Standard on market

pg. 167/176

pg. 651>661

Article-Nr.	Chain	Ref.	A (Plate Width) mm	R mm	Weight kg/m	Max working load N	Backflex radius min. mm	Material
11590102	C45	LF 1873 TAB K325	82,5	355	2,10	4500	180	LF
11600102	Stainless Steel		82,5	355	2,10	3500		
11590105	C45	LF 1873 TAB K450	114,3	355	2,30	4500		
11600105	Stainless Steel		114,3	355	2,30	3500		
11590106	C45	LF 1873 TAB K600	152,4	457	2,40	4500		
11600106	Stainless Steel		152,4	457	2,40	3500		
11590107	C45	LF 1873 TAB K750	190,5	457	2,60	4500		
11600107	Stainless Steel		190,5	457	2,60	3500		
11590108	C45	LF 1873 TAB K1000	254,0	457	2,80	4500		
11600108	Stainless Steel		254,0	457	2,80	3500		
11590109	C45	LF 1873 TAB K1200	304,8	457	3,00	4500		
11600109	Stainless Steel		304,8	457	3,00	3500		
11590302	C45	MX 1873 TAB K325	82,5	355	2,10	4500	180	MX
11600302	Stainless Steel		82,5	355	2,10	3500		
11590305	C45	MX 1873 TAB K450	114,3	355	2,30	4500		
11600305	Stainless Steel		114,3	355	2,30	3500		
11590306	C45	MX 1873 TAB K600	152,4	457	2,40	4500		
11600306	Stainless Steel		152,4	457	2,40	3500		
11590307	C45	MX 1873 TAB K750	190,5	457	2,60	4500		
11600307	Stainless Steel		190,5	457	2,60	3500		
11590308	C45	MX 1873 TAB K1000	254,0	457	2,80	4500		
11600308	Stainless Steel		254,0	457	2,80	3500		
11590309	C45	MX 1873 TAB K1200	304,8	457	3,00	4500		
11600309	Stainless Steel		304,8	457	3,00	3500		

Oadby Core product range
Oadby Available from stock in Leicester — Easy Available from stock in Italy — Standard Produced to order in Italy

Movex

1873 GT

Catena curvilinea
Sideflexing chain / Kurvengängige Plattenbandkette

Delivery: Easy | Standard | *The stainless steel version is supplied with LONG-LIFE SS roller chain.* | **TPE Rubber:** 75 ShA | **Backflex radius min.:** 210 mm

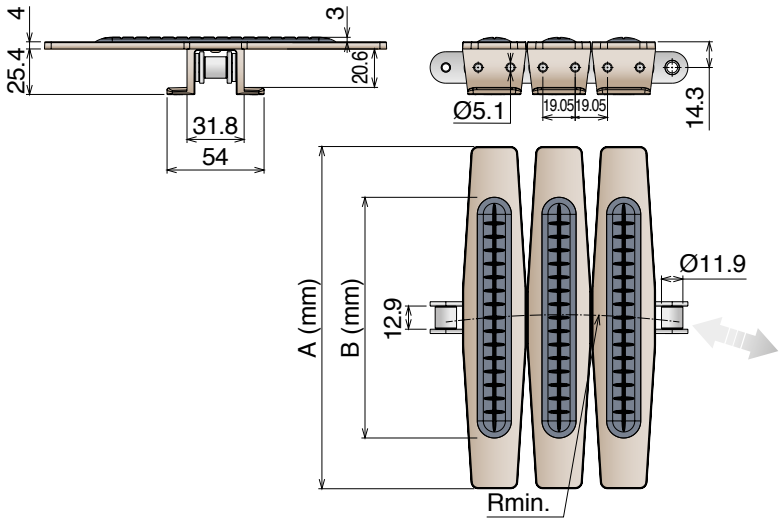

Standard lenght roller chain: 160 Pitches

TAB SYSTEM

10 feet 3.048 m — 80 flights

SPROCKET ASA 60 Standard on market

pg. 167/176

pg. 651>661

Article-Nr.	Chain	Ref.	A (Plate Width) mm	B (Rubber Width) mm	Weight kg/m	Max working load N	Sideflex radius min. mm	Material
11610107	C45	LF 1873 GT TAB K750	190,5	134,0	2,60	4500	457	LF
11620107	Stainless Steel		190,5	134,0	2,60	3500		
11610108	C45	LF 1873 GT TAB K1000	254,0	192,0	2,80	4500		
11620108	Stainless Steel		254,0	192,0	2,80	3500		
11610109	C45	LF 1873 GT TAB K1200	304,8	252,0	3,00	4500	457	
11620109	Stainless Steel		304,8	252,0	3,00	3500		

1873 GRIPPER GS1

Catena curvilinea
Sideflexing chain / Kurvengängige Plattenbandkette

Delivery: Easy | Standard — *The stainless steel version is supplied with LONG-LIFE SS roller chain.* | **Backflex radius min.:** 150 mm

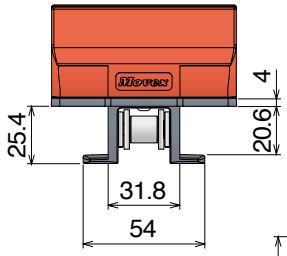

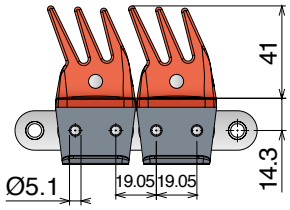

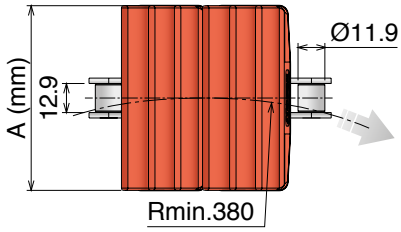

Standard lenght roller chain: 160 Pitches

TAB SYSTEM

10 feet
3.048 m
80 flights

SPROCKET
ASA 60
Standard on market

pg. 167/176

pg. 651>661

Article-Nr.	Chain	Ref.	A (Width) mm	Max working load N	Weight kg/m	Rubber	Material
11200102	C45	1873 TAB K325 GR	82,5	4500	4,354	Material: TPR Color: Red	LFD
11200105		1873 TAB K450 GR	114,3		4,945		
11200202	Nickel Plated Steel	1873 NP TAB K325 GR	82,5	4500	4,354		
11200205		1873 NP TAB K450 GR	114,3		4,945		
11200302	Stainless Steel	1873 SS TAB K325 GR	82,5	3500	4,354		
11200305		1873 SS TAB K450 GR	114,3		4,945		
11320102	C45	1873 TAB K325 GR	82,5	4500	4,354	Material: TPR Color: Red	MX
11320105		1873 TAB K450 GR	114,3		4,945		
11320202	Nickel Plated Steel	1873 NP TAB K325 GR	82,5	4500	4,354		
11320205		1873 NP TAB K450 GR	114,3		4,945		
11320302	Stainless Steel	1873 SS TAB K325 GR	82,5	3500	4,354		
11320305		1873 SS TAB K450 GR	114,3		4,945		
11210102	C45	1873 TAB K325 GR	82,5	4500	4,354	Material: EPDM-PP Color: Black	PP
11210105		1873 TAB K450 GR	114,3		4,945		
11210202	Nickel Plated Steel	1873 NP TAB K325 GR	82,5	4500	4,354		
11210205		1873 NP TAB K450 GR	114,3		4,945		
11210302	Stainless Steel	1873 SS TAB K325 GR	82,5	3500	4,354		
11210305		1873 SS TAB K450 GR	114,3		4,945		
11330102	C45	1873 TAB K325 GR	82,5	4500	4,354	Material: TPR Color: Red	MWX
11330105		1873 TAB K450 GR	114,3		4,945		
11330202	Nickel Plated Steel	1873 NP TAB K325 GR	82,5	4500	4,354		
11330205		1873 NP TAB K450 GR	114,3		4,945		
11330302	Stainless Steel	1873 SS TAB K325 GR	82,5	3500	4,354		
11330305		1873 SS TAB K450 GR	114,3		4,945		

Oadby Core product range
Oadby Available from stock in Leicester
Easy Available from stock in Italy
Standard Produced to order in Italy

Movex

1873 GRIPPER GS2

Catena curvilinea
Sideflexing chain / Kurvengängige Plattenbandkette

Delivery: Easy | Standard — *The stainless steel version is supplied with LONG-LIFE SS roller chain.* | **Backflex radius min.:** 150 mm

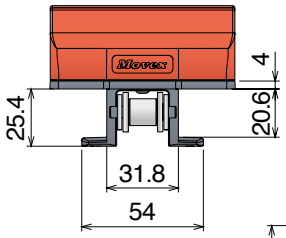

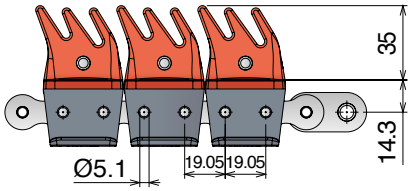

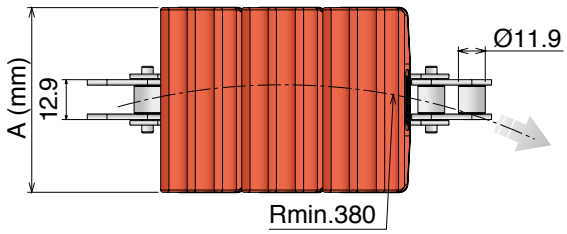

Standard lenght roller chain: 160 Pitches

TAB SYSTEM

10 feet 3.048 m — 80 flights

SPROCKET ASA 60 Standard on market

pg. 167/176

pg. 651>661

Article-Nr.	Chain	Ref.	A (Width) mm	Max working load N	Weight kg/m	Rubber	Material
11280102	C45	1873 TAB K325 GR	82,5	4500	4,354	Material: TPR Color: Red	LFD
11280105		1873 TAB K450 GR	114,3		4,945		
11280202	Nickel Plated Steel	1873 NP TAB K325 GR	82,5	4500	4,354		
11280205		1873 NP TAB K450 GR	114,3		4,945		
11280302	Stainless Steel	1873 SS TAB K325 GR	82,5	3500	4,354		
11280305		1873 SS TAB K450 GR	114,3		4,945		
11340102	C45	1873 TAB K325 GR	82,5	4500	4,354	Material: TPR Color: Red	MX
11340105		1873 TAB K450 GR	114,3		4,945		
11340202	Nickel Plated Steel	1873 NP TAB K325 GR	82,5	4500	4,354		
11340205		1873 NP TAB K450 GR	114,3		4,945		
11340302	Stainless Steel	1873 SS TAB K325 GR	82,5	3500	4,354		
11340305		1873 SS TAB K450 GR	114,3		4,945		
11290102	C45	1873 TAB K325 GR	82,5	4500	4,354	Material: EPDM-PP Color: Black	PP
11290105		1873 TAB K450 GR	114,3		4,945		
11290202	Nickel Plated Steel	1873 NP TAB K325 GR	82,5	4500	4,354		
11290205		1873 NP TAB K450 GR	114,3		4,945		
11290302	Stainless Steel	1873 SS TAB K325 GR	82,5	3500	4,354		
11290305		1873 SS TAB K450 GR	114,3		4,945		
11350102	C45	1873 TAB K325 GR	82,5	4500	4,354	Material: TPR Color: Red	MWX
11350105		1873 TAB K450 GR	114,3		4,945		
11350202	Nickel Plated Steel	1873 NP TAB K325 GR	82,5	4500	4,354		
11350205		1873 NP TAB K450 GR	114,3		4,945		
11350302	Stainless Steel	1873 SS TAB K325 GR	82,5	3500	4,354		
11350305		1873 SS TAB K450 GR	114,3		4,945		

1873 GRIPPER GS4

Catena curvilinea
Sideflexing chain / Kurvengängige Plattenbandkette

Delivery: Easy | Standard — *The stainless steel version is supplied with LONG-LIFE SS roller chain.* | **Backflex radius min.:** 400 mm

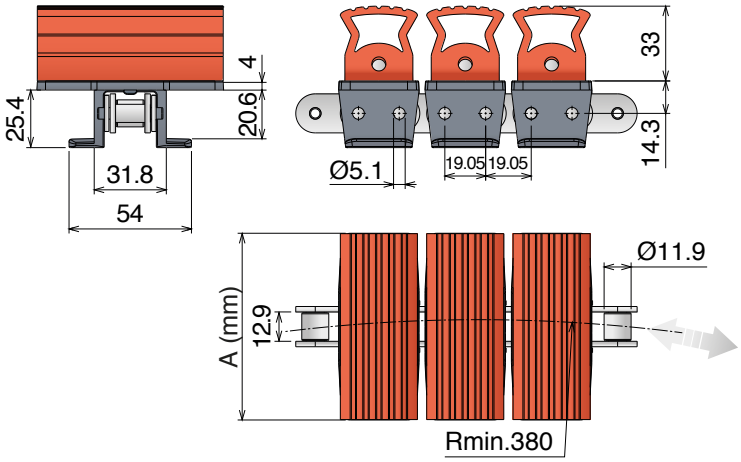

Standard lenght roller chain: 160 Pitches

TAB SYSTEM

10 feet
3.048 m
80 flights

SPROCKET
ASA 60
Standard on market

pg. 167/176
pg. 651>661

Article-Nr.	Chain	Ref.	A (Width) mm	Max working load N	Weight kg/m	Rubber	Material
11830102	C45	1873 TAB K325 GR	82,5	4500	4,15	Material: TPR Color: Red	LFD
11830105		1873 TAB K450 GR	114,3		4,70		
11830202	Nickel Plated Steel	1873 NP TAB K325 GR	82,5	4500	4,15		
11830205		1873 NP TAB K450 GR	114,3		4,70		
11830302	Stainless Steel	1873 SS TAB K325 GR	82,5	3500	4,15		
11830305		1873 SS TAB K450 GR	114,3		4,70		
11840102	C45	1873 TAB K325 GR	82,5	4500	4,15	Material: TPR Color: Red	MX
11840105		1873 TAB K450 GR	114,3		4,70		
11840202	Nickel Plated Steel	1873 NP TAB K325 GR	82,5	4500	4,15		
11840205		1873 NP TAB K450 GR	114,3		4,70		
11840302	Stainless Steel	1873 SS TAB K325 GR	82,5	3500	4,15		
11840305		1873 SS TAB K450 GR	114,3		4,70		
11850102	C45	1873 TAB K325 GR	82,5	4500	4,15	Material: EPDM-PP Color: Black	PP
11850105		1873 TAB K450 GR	114,3		4,70		
11850202	Nickel Plated Steel	1873 NP TAB K325 GR	82,5	4500	4,15		
11850205		1873 NP TAB K450 GR	114,3		4,70		
11850302	Stainless Steel	1873 SS TAB K325 GR	82,5	3500	4,15		
11850305		1873 SS TAB K450 GR	114,3		4,70		
11860102	C45	1873 TAB K325 GR	82,5	4500	4,15	Material: TPR Color: Red	MWX
11860105		1873 TAB K450 GR	114,3		4,70		
11860202	Nickel Plated Steel	1873 NP TAB K325 GR	82,5	4500	4,15		
11860205		1873 NP TAB K450 GR	114,3		4,70		
11860302	Stainless Steel	1873 SS TAB K325 GR	82,5	3500	4,15		
11860305		1873 SS TAB K450 GR	114,3		4,70		

Oadby Core product range
Oadby Available from stock in Leicester
Easy Available from stock in Italy
Standard Produced to order in Italy

Movex

1873 D-SHAPE

Catena curvilinea
Sideflexing chain / Kurvengängige Plattenbandkette

The stainless steel version is supplied with LONG-LIFE SS roller chain. | **Backflex radius min.:** 200 mm

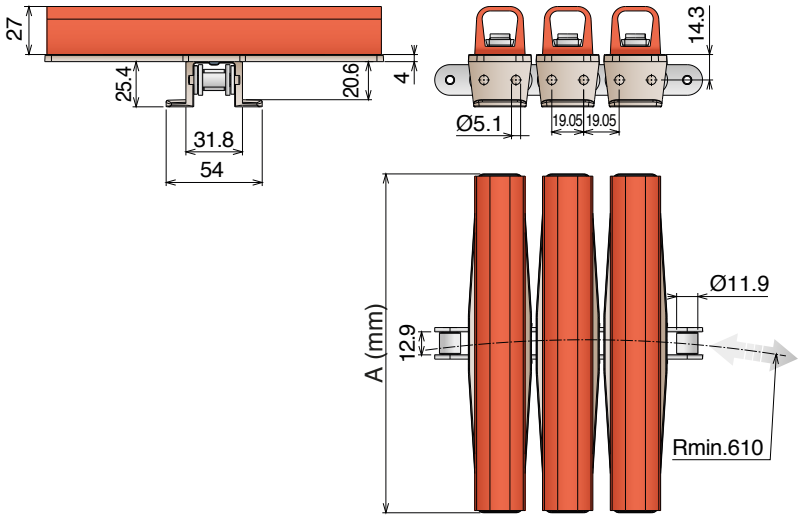

10 feet
3.048 m
80 flights

SPROCKET
ASA 60
Standard on market

pg. 167/176
pg. 651>661

TAB SYSTEM

Standard lenght roller chain: 160 Pitches

Article-Nr.	Chain	Ref.	A (Width) mm	Max working load N	Weight kg/m	Rubber	Material
11870106	C45	**1873 TAB K600 D**	152,4	4500	4,00	Material: TPR Color: Red	LF
11870107		**1873 TAB K750 D**	190,5		4,90		
11870206	Nickel Plated Steel	**1873 NP TAB K600 D**	152,4	4500	4,00		
11870207		**1873 NP TAB K750 D**	190,5		4,90		
11870306	Stainless Steel	**1873 SS TAB K600 D**	152,4	3500	4,00		
11870307		**1873 SS TAB K750 D**	190,5		4,90		
11880106	C45	**1873 TAB K600 D**	152,4	4500	4,00	Material: TPR Color: Red	MX
11880107		**1873 TAB K750 D**	190,5		4,90		
11880206	Nickel Plated Steel	**1873 NP TAB K600 D**	152,4	4500	4,00		
11880207		**1873 NP TAB K750 D**	190,5		4,90		
11880306	Stainless Steel	**1873 SS TAB K600 D**	152,4	3500	4,00		
11880307		**1873 SS TAB K750 D**	190,5		4,90		
11890106	C45	**1873 TAB K600 D**	152,4	4500	4,00	Material: EPDM-PP Color: Black	MPX
11890107		**1873 TAB K750 D**	190,5		4,90		
11890206	Nickel Plated Steel	**1873 NP TAB K600 D**	152,4	4500	4,00		
11890207		**1873 NP TAB K750 D**	190,5		4,90		
11890306	Stainless Steel	**1873 SS TAB K600 D**	152,4	3500	4,00		
11890307		**1873 SS TAB K750 D**	190,5		4,90		

1873 MX1

Catena curvilinea
Sideflexing chain / Kurvengängige Plattenbandkette

RANGE EXTENSION

The stainless steel version is supplied with LONG-LIFE SS roller chain. | **TPE Rubber:** 75 ShA | **Backflex radius min.:** 200 mm

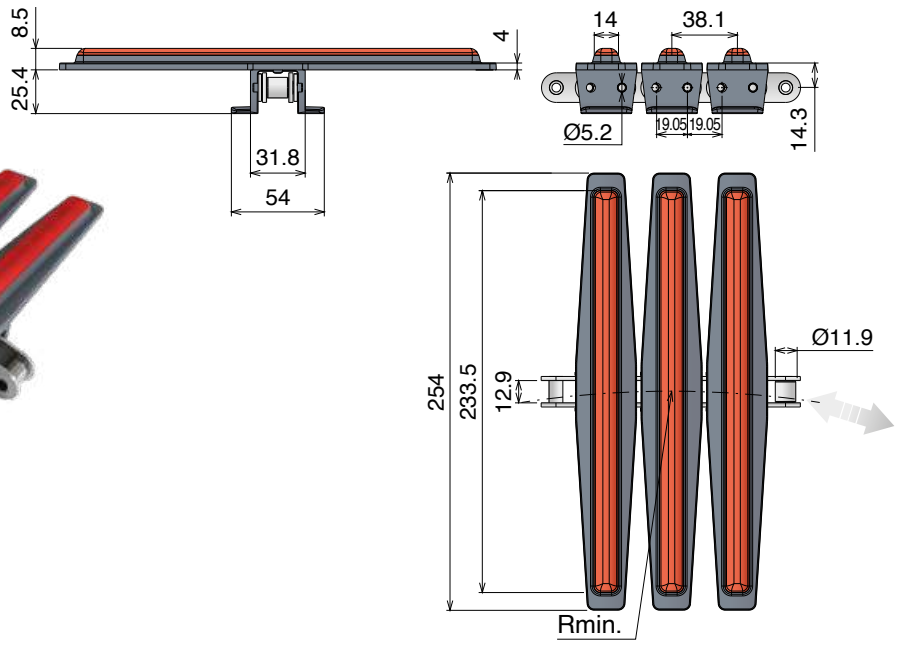

Standard lenght roller chain: 160 Pitches

TAB SYSTEM

10 feet
3.048 m
80 flights

SPROCKET
ASA 60
Standard on market

pg. 167/176
pg. 651>661

Article-Nr.	Chain	Ref.	Plate Width mm	Weight kg/m	Max working load N	Sideflex radius min. mm	Material
11790108	C45	1873 LF TAB K1000	254,0	2,80	4500	457	LF
11780108	Nickel Plated Steel				4500		
11690108	Stainless Steel				3500		
11790308	C45	1873 MX TAB K1000	254,0	2,80	4500	457	MX
11780308	Nickel Plated Steel				4500		
11690308	Stainless Steel				3500		

1873 MX1

Chain for hot-fill applications, neck & cap sterilizing.

Care
Designed to keep the products in the correct position during the twist movement.

Temperature resistance
The rubber is developed for and perfectly resistant against the higher temperatures of the hot-filled products.

Long life roller chain
Special hardened pins and bushing guarantee a longer lifetime. Chain can twist 90°in 1500 mm.

Product stability
The new developed design guarantees a perfect connection between rubber and plate.

Oadby Core product range
Oadby Available from stock in Leicester
Easy Available from stock in Italy
Standard Produced to order in Italy
Movex

1873 MX2

Catena curvilinea
Sideflexing chain / Kurvengängige Plattenbandkette

RANGE EXTENSION

The stainless steel version is supplied with LONG-LIFE SS roller chain. | **TPE Rubber:** 75 ShA | **Backflex radius min.:** 200 mm

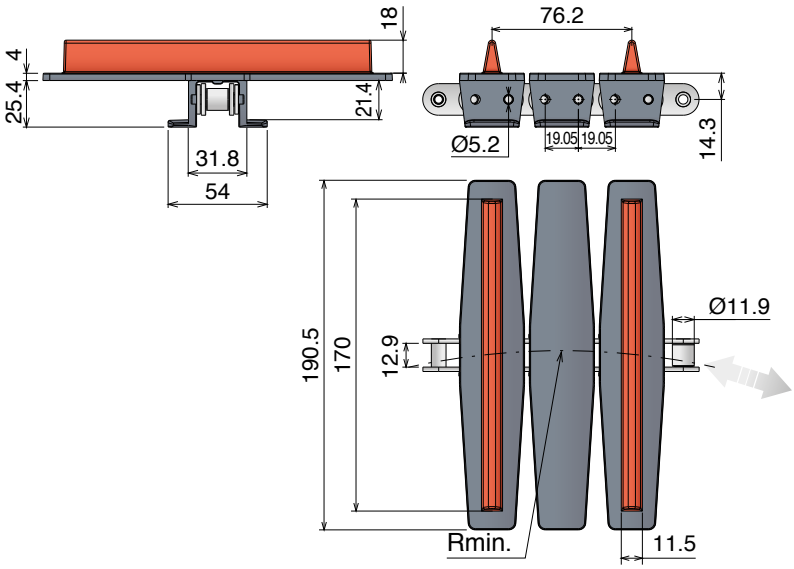

Standard lenght roller chain: 160 Pitches

TAB SYSTEM

10 feet
3.048 m
80 flights

SPROCKET
ASA 60
Standard on market

pg. 167/176
pg. 651>661

Article-Nr.	Chain	Ref.	Plate Width mm	Weight kg/m	Max working load N	Sideflex radius min. mm	Material
11770107	C45	**1873 LF TAB K750**	190,5	2,60	4500	457	LF
11760107	Nickel Plated Steel				4500		
11670107	Stainless Steel				3500		
11770307	C45	**1873 MX TAB K750**	190,5	2,60	4500	457	MX
11760307	Nickel Plated Steel				4500		
11670307	Stainless Steel				3500		

1873 MX2

Chain for twisting cans

Care
Designed to twist cans without pressure.

Temperature resistance
Materials are suitable for use at high temperatures.

Long life roller chain
Special hardened pins and bushing guarantee a longer lifetime. Chain can twist 90°in 1500 mm.

Product stability
The flights assure the position of the cans also at higher speed.

878 GRIPPER

Catena curvilinea
Sideflexing chain / Kurvengängige Scharnierbandkette

Delivery: Easy Standard

Backflex radius min. GS1: 100 mm - **GS2** 180 mm - **GS4** 380 mm

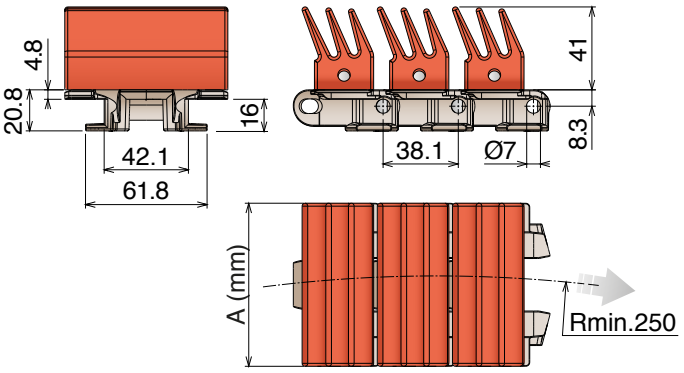

GS1

TAB SYSTEM

10 feet 3.048 m | 80 links | pg. 92-93 | pg. 163/175 | pg. 651->661

Article-Nr.	Ref.	A (Plate Width) mm	R mm	Weight kg/m	Max working load N	Rubber	Material
11800102	LF 878 GS1 K325	82,5	250	4,65	2200	TPR	LF

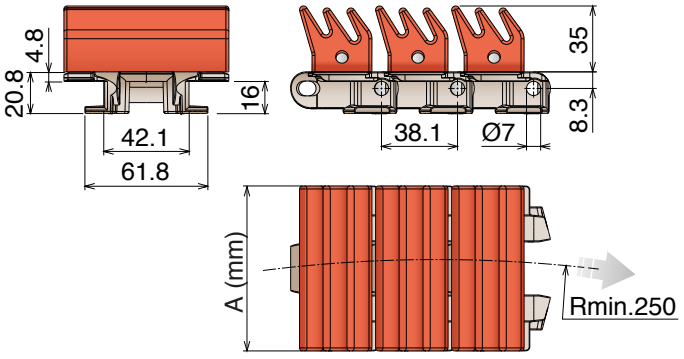

GS2

TAB SYSTEM

10 feet 3.048 m | 80 links | pg. 92-93 | pg. 163/175 | pg. 651->661

Article-Nr.	Ref.	A (Plate Width) mm	R mm	Weight kg/m	Max working load N	Rubber	Material
11810102	LF 878 GS2 K325	82,5	250	4,05	2200	TPR	LF

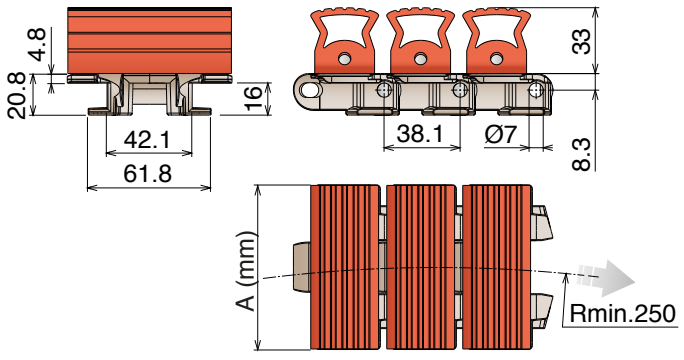

GS4

TAB SYSTEM

10 feet 3.048 m | 80 links | pg. 92-93 | pg. 163/175 | pg. 516->524

Article-Nr.	Ref.	A (Plate Width) mm	R mm	Weight kg/m	Max working load N	Rubber	Material
11820102	LF 878 GS4 K325	82,5	250	4,10	2200	TPR	LF

Oadby Core product range
Oadby Available from stock in Leicester | Easy Available from stock in Italy | Standard Produced to order in Italy

Movex

1843 Catena curvilinea
Sideflexing chain / Kurvengängige Plattenbandkette

Delivery: Easy | Standard

Backflex radius min.: 80 mm

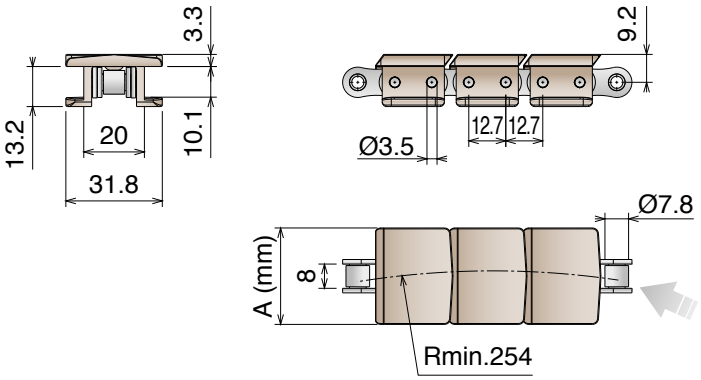

Standard lenght roller chain: 240 Pitches

TAB SYSTEM

10 feet 3.048 m
120 links

SPROCKET
ASA 40
Standard on market

pg. 168/176
pg. 651>661

Article-Nr.	Chain	Ref.	A (Plate Width) mm	R mm	Weight kg/m	Max working load N	Backflex radius min. mm	Material
11400117	C45	LF 1843 TAB K125	31,8	254	0,74	2700	50	LF
11410117	Stainless Steel		31,8	254	0,74	1900		
11400119	C45	LF 1843 TAB K200	50,8	254	0,89	2700		
11410119	Stainless Steel		50,8	254	0,89	1900		
11400317	C45	MX 1843 TAB K125	31,8	254	0,74	2700	50	MX
11410317	Stainless Steel		31,8	254	0,74	1900		
11400319	C45	MX 1843 TAB K200	50,8	254	0,89	2700		
11410319	Stainless Steel		50,8	254	0,89	1900		

SP 1883

Catena curvilinea
Sideflexing chain / Kurvengängige Plattenbandkette

Backflex radius min.: 350 mm

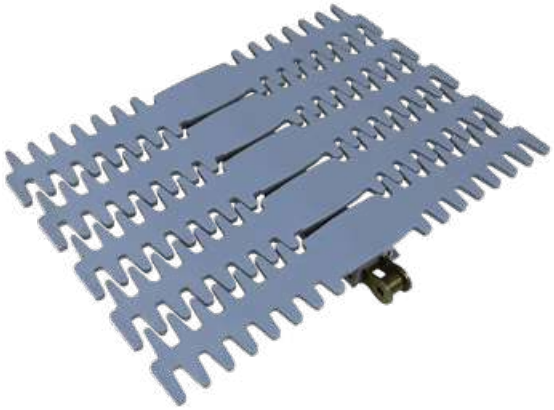

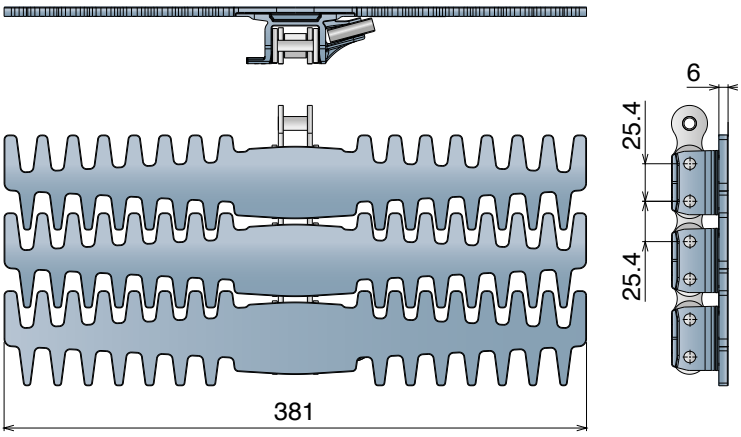

10 feet
3.048 m
60 links

SPROCKET
ASA 80
Standard on market

pg. 651>661

Standard lenght roller chain: 120 Pitches

Article-Nr.	Chain	Ref.	Plate Width mm	Weight kg/m	Max working load N	Sideflex radius min. mm	Material
11640110	C45	**LFA SP 1883 TAB K1500**	381,0	12,5	6500	711	LFA

Max Speed High Performance

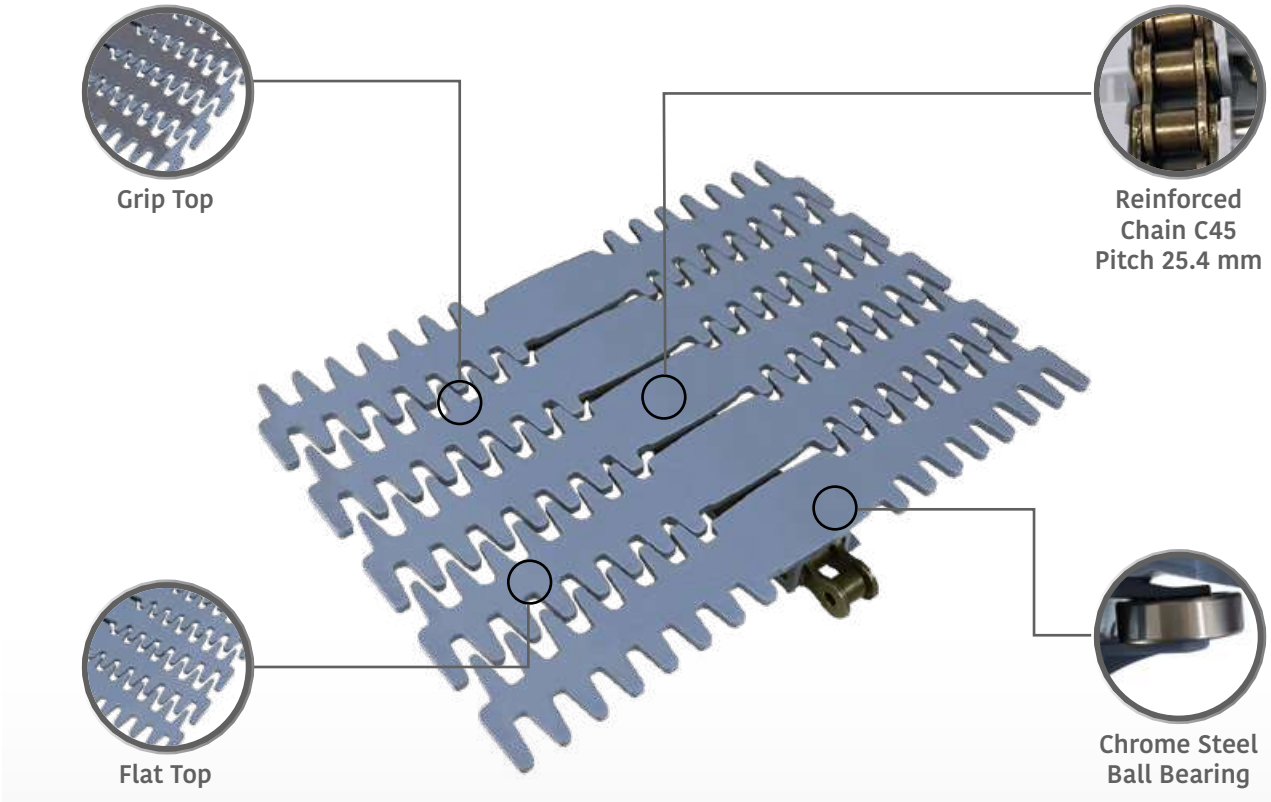

Oadby Core product range
Oadby Available from stock in Leicester
Easy Available from stock in Italy
Standard Produced to order in Italy

Movex

SP 1883 GT

Catena curvilinea
Sideflexing chain / Kurvengängige Plattenbandkette

Backflex radius min.: 350 mm

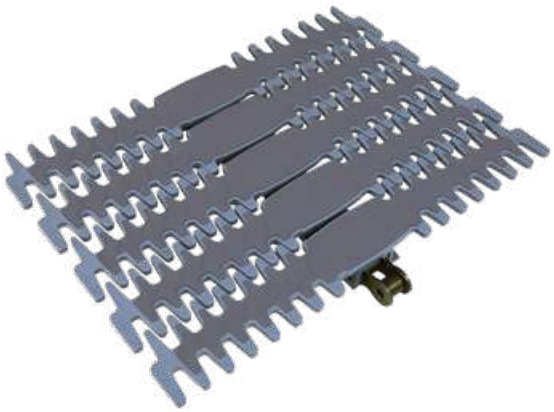

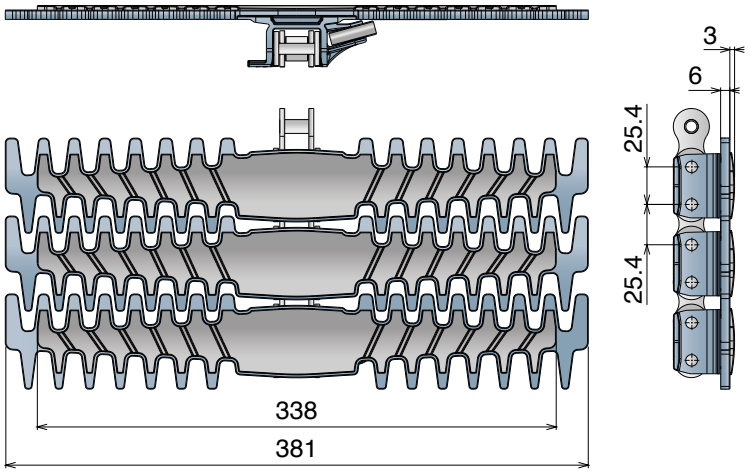

10 feet
3.048 m
60 links

SPROCKET
ASA 80
Standard on market

pg. 651->661

Standard lenght roller chain: 120 Pitches

Article-Nr.	Chain	Ref.	Plate Width mm	Weight kg/m	Max working load N	Sideflex radius min. mm	Material
11650110	C45	**LFA SP 1883 GT TAB K1500**	381,0	13,0	6500	711	**LFA**

CC 600

Catena curvilinea
Sideflexing chain / Kurvengängige Scharnierbandkette

Delivery: Easy | Standard — **Pins:** Stainless Steel | **Backflex radius min.:** 50 mm

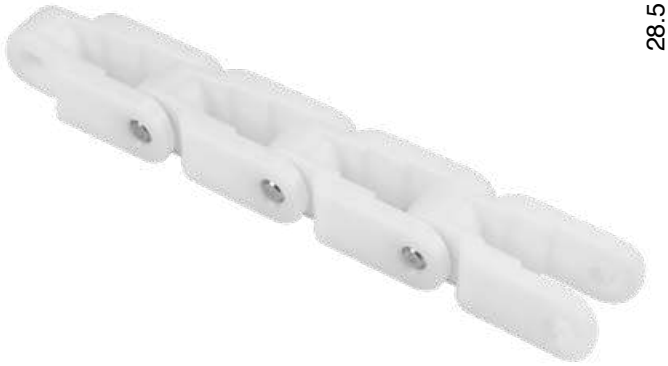

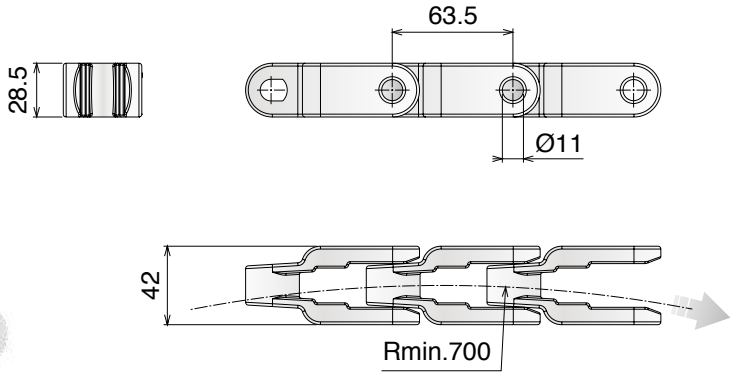

10 feet 3.048 m | 48 links | pg. 97 | pg. 651>661

Article-Nr.	Ref.	Plate Width mm	Weight kg/m	Max working load N	Material
11220400	CC 600	42	1,35	4000	LFN
11220300	CC 600	42	1,35	3200	MX

CC 600 TAB

Catena curvilinea
Sideflexing chain / Kurvengängige Scharnierbandkette

Delivery: Easy | Standard — **Pins:** Stainless Steel | **Backflex radius min.:** 50 mm

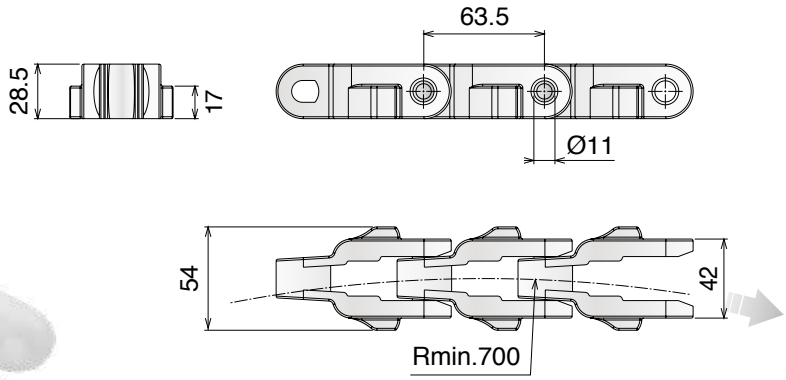

TAB SYSTEM

10 feet 3.048 m | 48 links | pg. 97 | pg. 651>661

Article-Nr.	Ref.	Plate Width mm	Weight kg/m	Max working load N	Material
11230400	CC 600 TAB	42	1,45	4000	LFN
11230300	CC 600 TAB	42	1,45	3200	MX

Oadby Core product range
Oadby Available from stock in Leicester | Easy Available from stock in Italy | Standard Produced to order in Italy

Movex

CC 600 D

Catena curvilinea
Sideflexing chain / Kurvengängige Scharnierbandkette

Delivery: Easy | Standard — **Pins:** Stainless Steel | **Backflex radius min.:** 50 mm

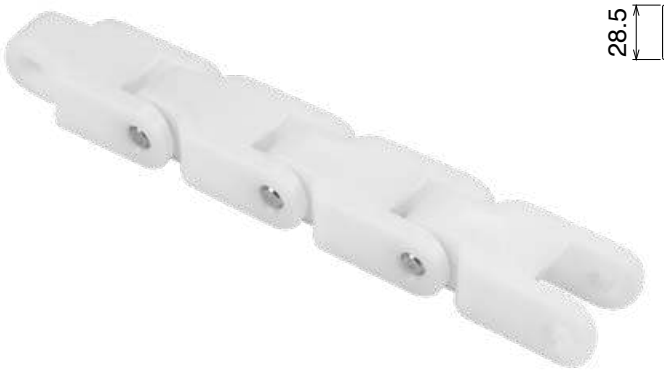

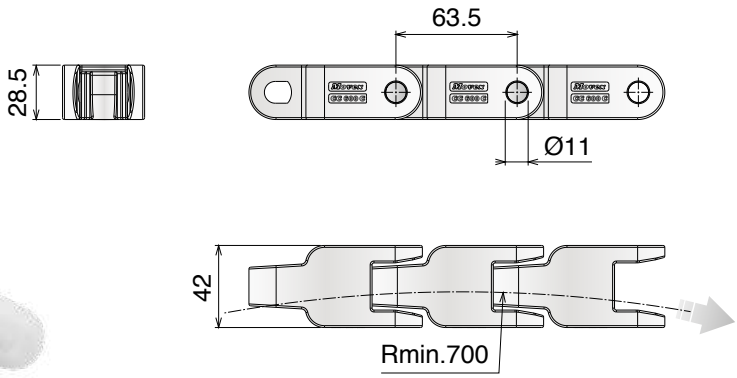

10 feet 3.048 m | 48 links | pg. 97 | pg. 651>661

Article-Nr.	Ref.	Plate Width mm	Weight kg/m	Max working load N	Material
11220410	CC 600 D	42	1,40	4000	LFN
11220310	CC 600 D	42	1,40	3200	MX

CC 600 D TAB

Catena curvilinea
Sideflexing chain / Kurvengängige Scharnierbandkette

Delivery: Easy | Standard — **Pins:** Stainless Steel | **Backflex radius min.:** 50 mm

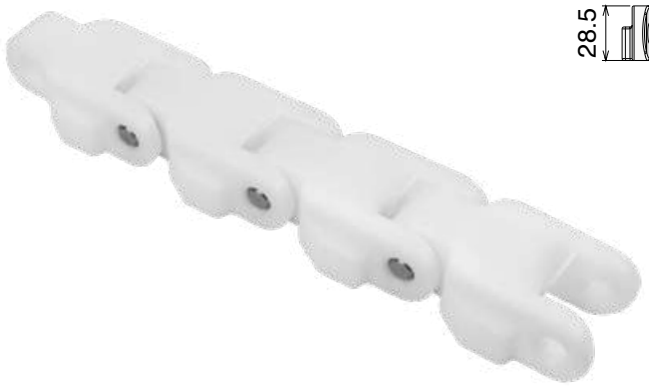

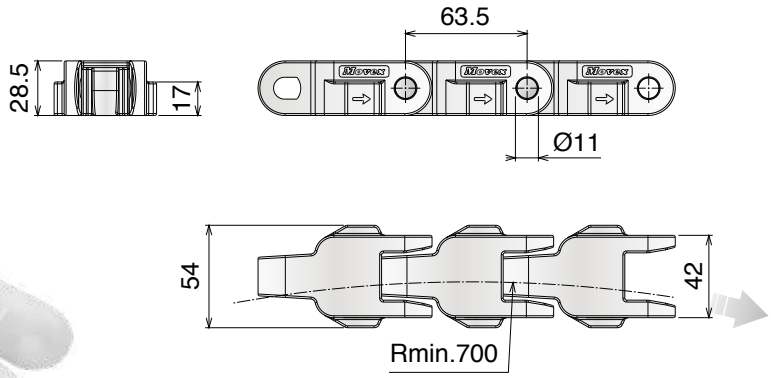

TAB SYSTEM

10 feet 3.048 m | 48 links | pg. 97 | pg. 651>661

Article-Nr.	Ref.	Plate Width mm	Weight kg/m	Max working load N	Material
11230410	CC 600 D TAB	42	1,55	4000	LFN
11230310	CC 600 D TAB	42	1,55	3200	MX

CC 1400

Catena curvilinea
Sideflexing chain / Kurvengängige Scharnierbandkette

Pins: Stainless Steel | **Backflex radius min.:** 50 mm

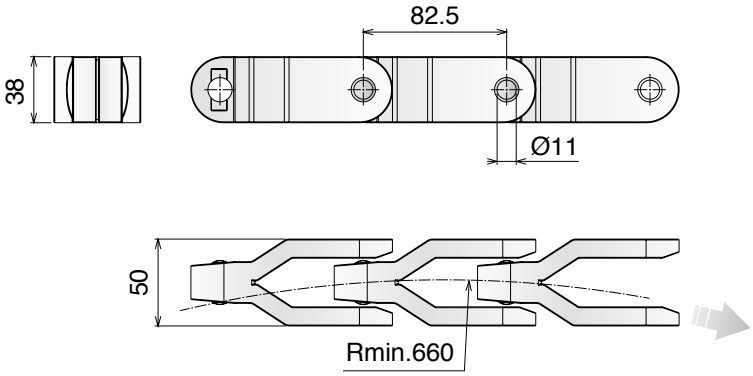

10 feet 3.052 m | 37 links | pg. 97 | pg. 651>661

Article-Nr.	Ref.	Plate Width mm	Weight kg/m	Max working load N	Material
11300400	CC 1400	50	3,24	6500	LFN
11300300	CC 1400	50	3,24	5200	MX

CC 1400 TAB

Catena curvilinea
Sideflexing chain / Kurvengängige Scharnierbandkette

Pins: Stainless Steel | **Backflex radius min.:** 50 mm

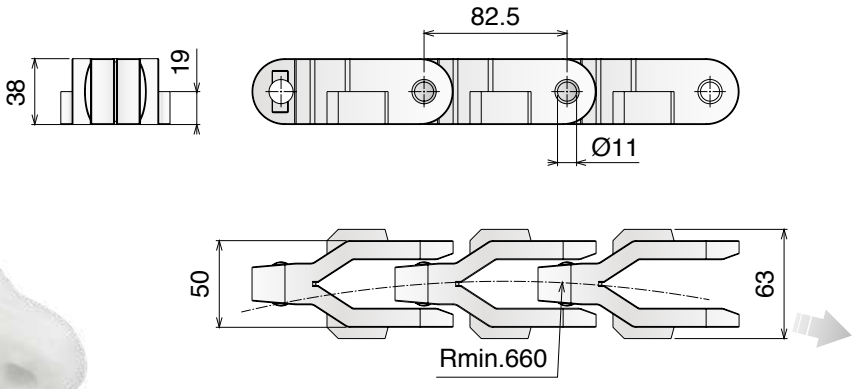

TAB SYSTEM

10 feet 3.052 m | 37 links | pg. 97 | pg. 651>661

Article-Nr.	Ref.	Plate Width mm	Weight kg/m	Max working load N	Material
11310400	CC 1400 TAB	50	3,24	6500	LFN
11310300	CC 1400 TAB	50	3,24	5200	MX

Oadby Core product range
Oadby Available from stock in Leicester
Easy Available from stock in Italy
Standard Produced to order in Italy
Movex

1701 TAB OP

Catena curvilinea
Sideflexing chain / Kardankette

Pins: Stainless Steel | **Backflex radius min.:** 50 mm

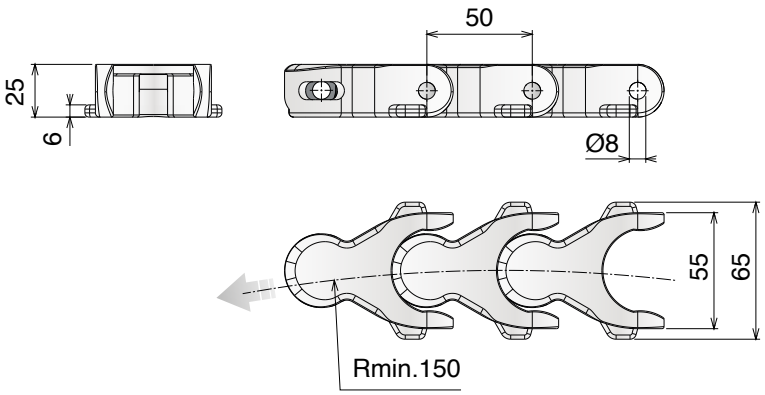

TAB SYSTEM

10 feet 3.050 m				
61 links	pg. 98	pg. 104	pg. 169/177	pg. 651>661

Article-Nr.	Ref.	Plate Width mm	Weight kg/m	Max working load N	Material
11360400	**LF 1701 TAB OP**	55	1,40	2700	**LFN**

1701 TAB OPF

Catena curvilinea
Sideflexing chain / Kardankette

Pins: Stainless Steel | **Backflex radius min. Type A/B/C:** 100 mm | **Backflex radius min. Type D:** 120 mm

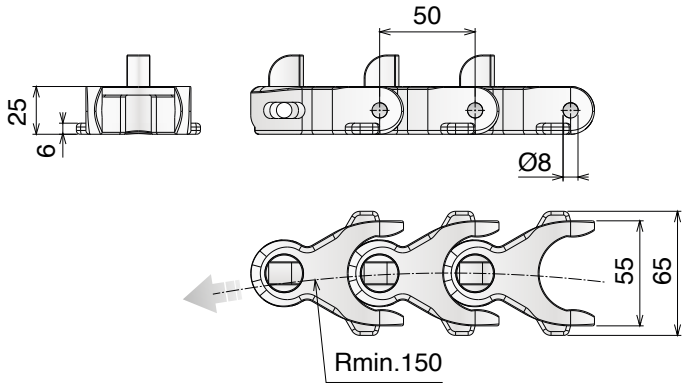

Type A

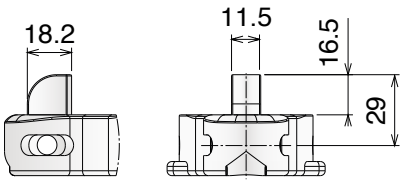

Type B

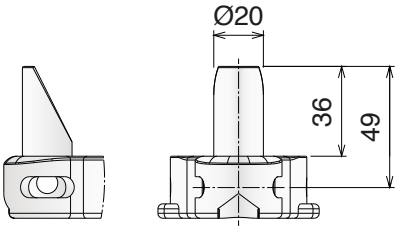

Type C

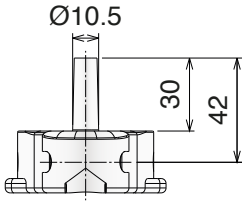

Type D

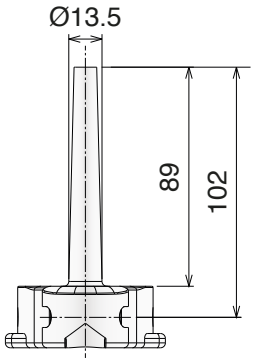

TAB SYSTEM

10 feet 3.050 m				
61 links	pg. 98	pg. 104	pg. 169/177	pg. 651>661

Article-Nr.	Ref.	Plate Width mm	Weight kg/m	Max working load N	Material
11360400-FA	1701 TAB Type A	55	1,60	2700	LFN
11360400-FB	1701 TAB Type B	55	1,60		
11360400-FC	1701 TAB Type C	55	2,00		
11360400-FD	1701 TAB Type D	55	2,30		

Oadby Core product range
Oadby Available from stock in Leicester
Easy Available from stock in Italy
Standard Produced to order in Italy

1706

Catena curvilinea
Sideflexing chain / Kardankette

Pins: Stainless Steel | **Backflex radius min.:** 80 mm

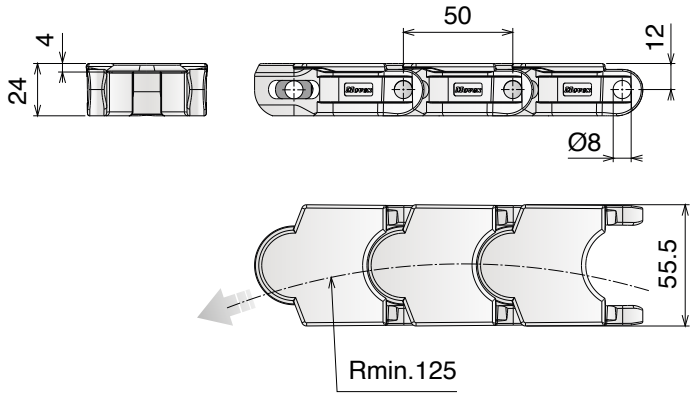

10 feet 3.050 m | 61 links | pg. 98 | pg. 105 | pg. 169/177 | pg. 651>661

Article-Nr.	Ref.	Plate Width mm	Weight kg/m	Max working load N	Material
11720400	LF 1706	55,5	1,35	2300	LFN
11720300	MX 1706	55,5	1,35	1900	MX

1706 TAB

Catena curvilinea
Sideflexing chain / Kardankette

Pins: Stainless Steel | **Backflex radius min.:** 80 mm

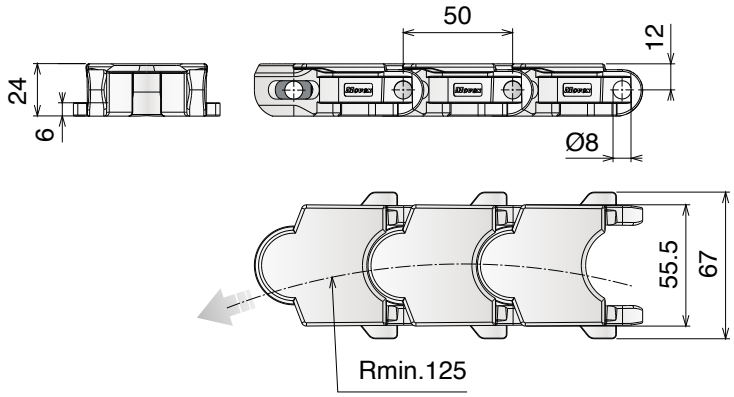

TAB SYSTEM

10 feet 3.050 m | 61 links | pg. 98 | pg. 105 | pg. 169/177 | pg. 651>661

Article-Nr.	Ref.	Plate Width mm	Weight kg/m	Max working load N	Material
11730400	LF 1706 TAB	55,5	1,38	2300	LFN
11730300	MX 1706 TAB	55,5	1,38	1900	MX

765 NO GAP

Catena curvilinea
Sideflexing chain / Kardankette

UPDATED MATERIALS

Delivery: Easy Standard

Pins: Stainless Steel | **Backflex radius min.:** 50 mm

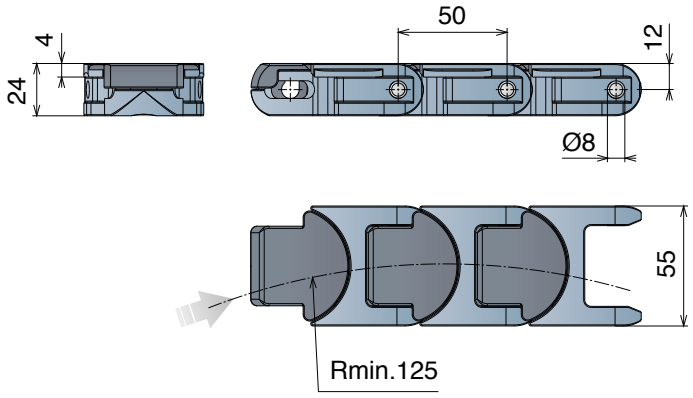

10 feet 3.050 m | 61 links | pg. 98 | pg. 105 | pg. 651>661

Article-Nr.	Ref.	Plate Width mm	Weight kg/m	Max working load N	Frame Material	Plate Material
11940100	765 LFA NO GAP	55	1,46	2670	LFA	MX
11940300	765 MX NO GAP	55	1,46	2200	MX	MK

Advantages:

- Improved safety
- Product stability
- Ideal to transport small products

Oadby Core product range
Oadby Available from stock in Leicester
Easy Available from stock in Italy
Standard Produced to order in Italy
Movex

43 MF-63 MF-83 MF-103 MF

Catena curvilinea
Sideflexing chain / Kardankette

Pins: Stainless Steel | **Backflex radius min.:** 80 mm

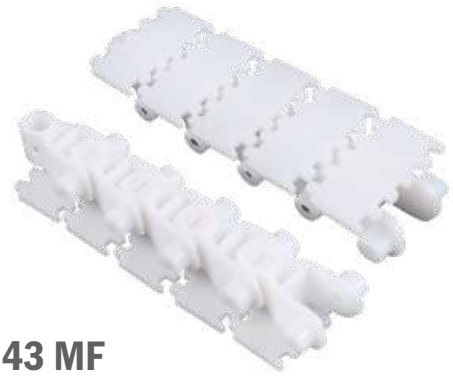

43 MF

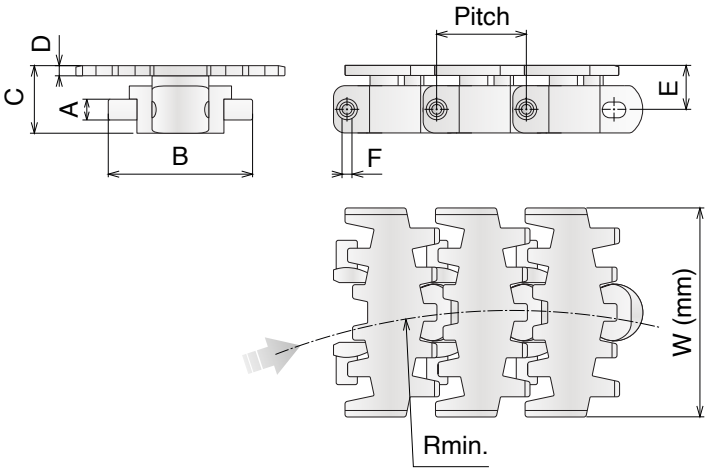

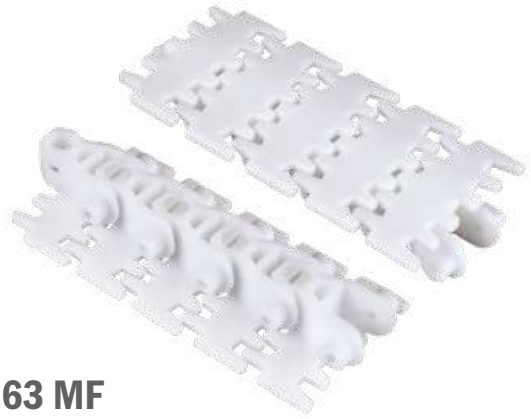

63 MF

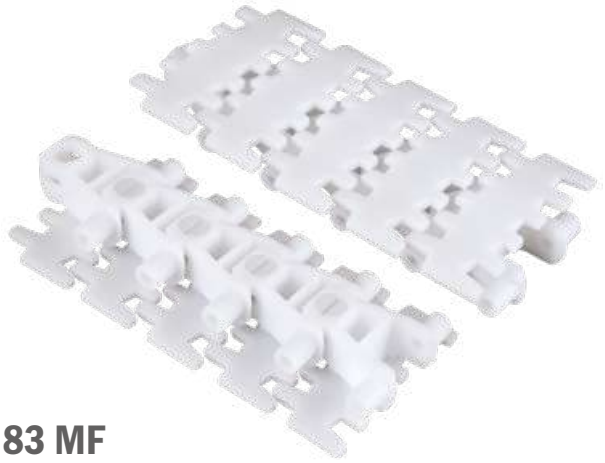

83 MF

103 MF

pg. 99-100 | pg. 105 | pg. 651>661

Article-Nr.	Ref.	W (Plate Width) mm	A mm	B mm	C mm	D mm	E mm	F mm	Weight kg/m	Pitch	Radius min.	Links	Max working load N	Material
12010400	43 MF	43	8,25	35	22	3	13,25	4	0,60	25,4	140	3.048 (120 links)	2100	LFN
12010401	63 MF	63	8,25	35	22,5	3,5	13,75	4	0,80	25,4	150	3.048 (120 links)		
12010402	83 MF	83	11	58	27	4	17	6	1,70	33,5	160	3.015 (90 links)		
12010403	103 MF	103	12	75	26	4,5	17,5	6	2,00	35,5	170	3.195 (90 links)		

83 M-140 M

Catena curvilinea
Sideflexing chain / Kardankette

Pins: Stainless Steel | **Backflex radius min.:** 150 mm

83 M

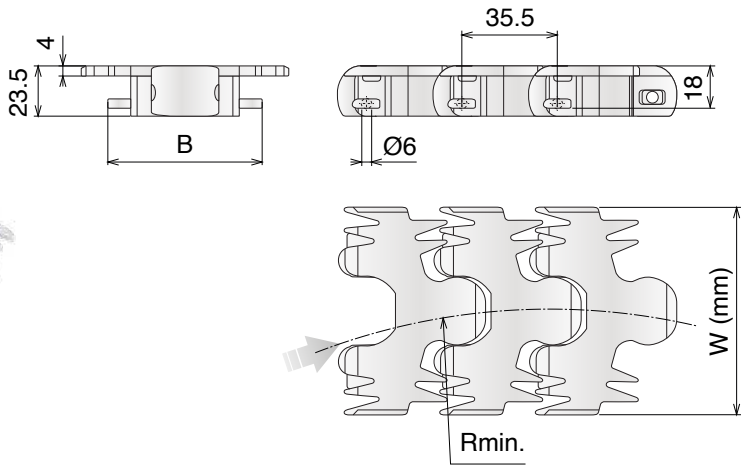

140 M

10 feet
3.048 m
80 links

pg. 101
pg. 106
pg. 651>661

Article-Nr.	Ref.	W (Plate Width) mm	B mm	Weight kg/m	Pitch	Radius min.	Max working load N	Material
12020402	**83 M**	83	63	1,35	35,5	150	2100	LFN
12020404	**140 M**	140	63	2,10	35,5	250		

Oadby Core product range
Oadby Available from stock in Leicester
Easy Available from stock in Italy
Standard Produced to order in Italy

77

For bore tolerance refers to Movex engineering manual available on our website.

Chain sprockets

815 Pag 78

815 Pag 78

815 Pag 79

815 Pag 79

881 Pag 80

881 Pag 80

881 Pag 81

881 Pag 81

805-821 Pag 82

805-821 Pag 82

8157 Pag 83

8157 Pag 83

820 Pag 84

820 Pag 84

820 Pag 85

820 Pag 85

831 Pag 86

831 Pag 86

831 Pag 87

831 Pag 87

880 Pag 88

880 Pag 88

880 Pag 89

880 Pag 89

882 Pag 90

882 Pag 90

882 Pag 91

882 Pag 91

512 Pag 92

512 Pag 92

815 Pag 93

8157 Pag 93

805 Pag 94

820 Pag 94

512 Pag 95

815 MINI Pag 96

815 MINI Pag 96

CC 600 Pag 97

CC 1400 Pag 97

1701-1706-765 Pag 98

1701-1706-765 Pag 98

43 MF-63 MF Pag 99

103 MF Pag 99

83 MF Pag 100

83 MF 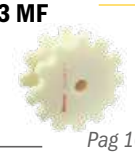 Pag 100

83 M-140 M Pag 101

83 M-140 M Pag 101

TURNING DISKS Pag 102

Material Info:

pg. 666

Materiale / *Material / Materialien:*
Poliammide/*Polyamide/Polyamid*
Viti: Acciaio inox/*Screws: Stainless steel/Schrauben: Edelstahl*
Dadi: ferro zincato/*Nuts: zinc plated steel/Mutter: verzinkter Stahl*

815 Ruota traino divisa, fresata
Split drive sprocket, machined / geteiltes Antriebskettenrad gefräst

Delivery: Easy | Standard — Also suitable for Series 881 M

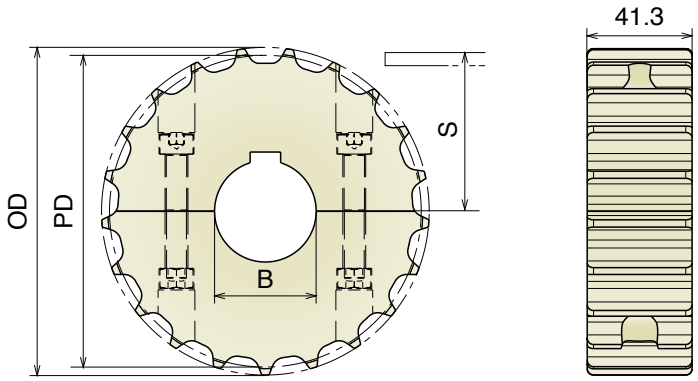

Part	Article-Nr.	Z-	Bore	PD	OD	S
501	50101	17	25	105,5	103,9	55,9
501	50102		30			
501	50103		35			
501	50104		40			
502	50201	19	25	117,3	117,0	61,9
502	50202		30			
502	50203		35			
502	50204		40			
503	50301	21	25	129,3	129,0	67,8
503	50302		30			
503	50303		35			
503	50304		40			
504	50401	23	25	141,2	142,0	73,8
504	50402		30			
504	50403		35			
504	50404		40			
505	50501	25	25	153,2	154,0	79,8
505	50502		30			
505	50503		35			
505	50504		40			
506	50601	27	25	165,2	166,8	85,8
506	50602		30			
506	50603		35			
506	50604		40			
507	50701	29	25	177,2	178,5	91,8
507	50702		30			
507	50703		35			
507	50704		40			

Ruota rinvio divisa, fresata
Split idler sprocket, machined / geteiltes Umlenkrad, gefräst

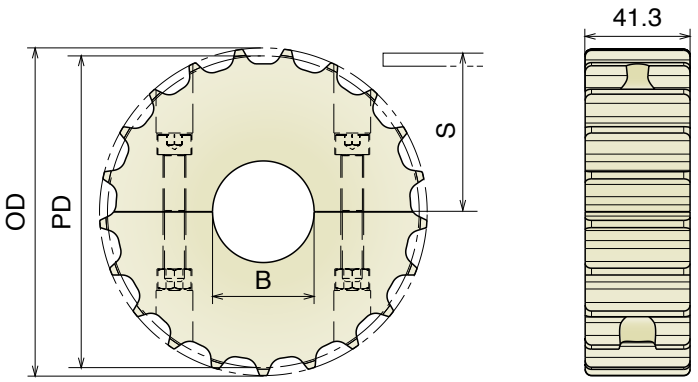

Part	Article-Nr.	Z-	Bore	PD	OD	S
501	50150	17	18*	105,5	103,9	55,9
501	50151		25			
501	50152		30			
501	50153		35			
501	50154		40			
502	50250	19	18*	117,3	117,0	61,9
502	50251		25			
502	50252		30			
502	50253		35			
502	50254		40			
503	50350	21	18*	129,3	129,0	67,8
503	50351		25			
503	50352		30			
503	50353		35			
503	50354		40			
504	50450	23	18*	141,2	142,0	73,8
504	50451		25			
504	50452		30			
504	50453		35			
504	50454		40			
505	50550	25	18*	153,2	154,0	79,8
505	50551		25			
505	50552		30			
505	50553		35			
505	50554		40			
506	50650	27	18*	165,2	166,8	85,8
506	50651		25			
506	50652		30			
506	50653		35			
506	50654		40			
507	50750	29	18*	177,2	178,5	91,8
507	50751		25			
507	50752		30			
507	50753		35			
507	50754		40			

*Plain Bore

Oadby Core product range
Oadby Available from stock in Leicester
Easy Available from stock in Italy
Standard Produced to order in Italy

Movex

815 Ruota traino divisa, stampata
Split drive sprocket, molded / geteiltes Antriebskettenrad, gespritzt

Delivery: Easy Standard Also suitable for Series 881 M

Part	Article-Nr.	Z-	Bore	PD	OD	S
508	50801	21	25	129,3	129,0	67,8
508	50802		30			
508	50803		35			
508	50804		40			
509	50901	23	25	141,2	142,0	73,8
509	50902		30			
509	50903		35			
509	50904		40			
510	51001	25	25	153,2	154,0	79,8
510	51002		30			
510	51003		35			
510	51004		40			

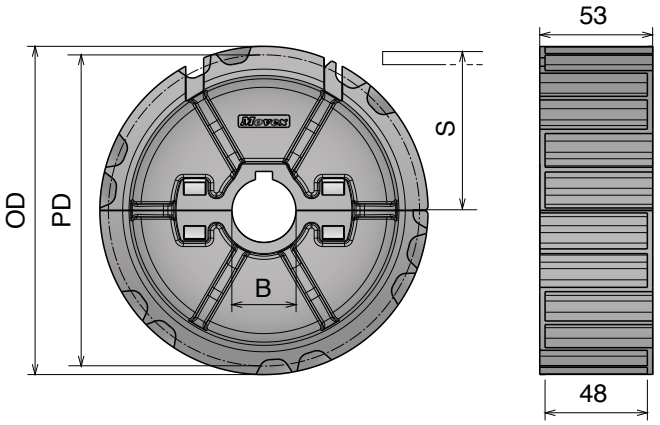

Ruota rinvio divisa, stampata
Split idler sprocket, molded / geteiltes Umlenkrad, gespritzt

Part	Article-Nr.	Z-	Bore	PD	OD	S
508	50851	21	25	129,3	129,0	67,8
508	50852		30			
508	50853		35			
508	50854		40			
509	50951	23	25	141,2	142,0	73,8
509	50952		30			
509	50953		35			
509	50954		40			
510	51051	25	25	153,2	154,0	79,8
510	51052		30			
510	51053		35			
510	51054		40			

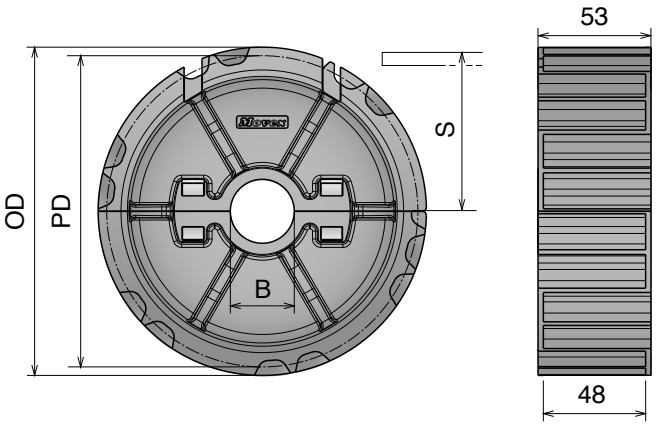

Materiale / *Material / Materialien:*
Poliammide/*Polyamide/Polyamid*
Viti: Acciaio inox/*Screws: Stainless steel/Schrauben: Edelstahl*
Dadi: ferro zincato/*Nuts: zinc plated steel/Mutter: verzinkter Stahl*

881 Ruota traino divisa, fresata
Split drive sprocket, machined / geteiltes Antriebskettenrad gefräst

Also suitable for Series 881 M, 881 B and 881 TAB

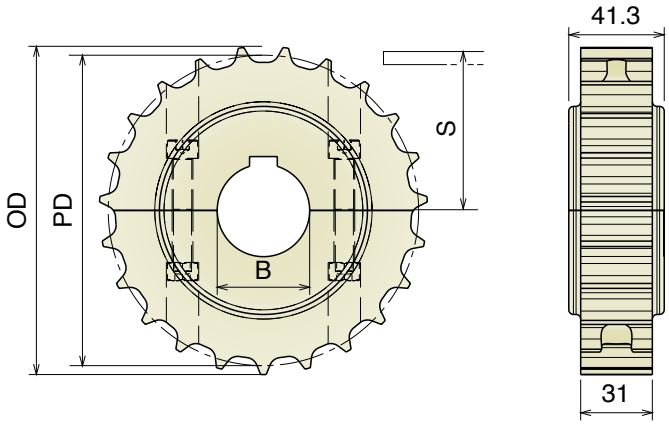

Part	Article-Nr.	Z-	Bore	PD	OD	S
511	51101	17	25	105,5	103,9	55,9
511	51102		30			
511	51103		35			
511	51104		40			
512	51201	19	25	117,3	117,0	61,9
512	51202		30			
512	51203		35			
512	51204		40			
513	51301	21	25	129,3	129,0	67,8
513	51302		30			
513	51303		35			
513	51304		40			
514	51401	23	25	141,2	142,0	73,8
514	51402		30			
514	51403		35			
514	51404		40			
515	51501	25	25	153,2	154,0	79,8
515	51502		30			
515	51503		35			
515	51504		40			
516	51601	27	25	165,2	166,8	85,8
516	51602		30			
516	51603		35			
516	51604		40			
517	51701	29	25	177,2	178,5	91,8
517	51702		30			
517	51703		35			
517	51704		40			

Ruota rinvio divisa, fresata
Split idler sprocket, machined / geteiltes Umlenkrad, gefräst

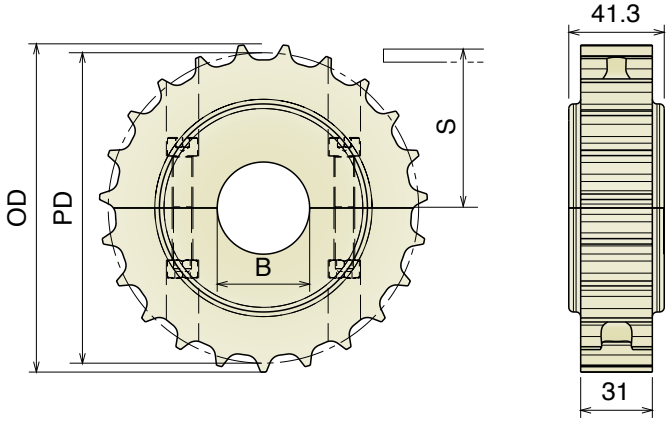

Part	Article-Nr.	Z-	Bore	PD	OD	S
511	51150	17	18*	105,5	103,9	55,9
511	51151		25			
511	51152		30			
511	51153		35			
511	51154		40			
512	51250	19	18*	117,3	117,0	61,9
512	51251		25			
512	51252		30			
512	51253		35			
512	51254		40			
513	51350	21	18*	129,3	129,0	67,8
513	51351		25			
513	51352		30			
513	51353		35			
513	51354		40			
514	51450	23	18*	141,2	142,0	73,8
514	51451		25			
514	51452		30			
514	51453		35			
514	51454		40			
515	51550	25	18*	153,2	154,0	79,8
515	51551		25			
515	51552		30			
515	51553		35			
515	51554		40			
516	51650	27	18*	165,2	166,8	85,8
516	51651		25			
516	51652		30			
516	51653		35			
516	51654		40			
517	51750	29	18*	177,2	178,5	91,8
517	51751		25			
517	51752		30			
517	51753		35			
517	51754		40			

*Plain Bore

Oadby Core product range
Oadby Available from stock in Leicester
Easy Available from stock in Italy
Standard Produced to order in Italy
Movex

Materiale / *Material / Materialien:*
Poliammide rinforzato/Polyamide reinforced/Verstärktes Polyamid
Viti: Acciaio inox/*Screws: Stainless steel/Schrauben: Edelstahl*
Dadi: Ottone nichelato/*Nuts: Nickel plated brass/Mutter: Messing*

881 Ruota traino divisa, stampata
Split drive sprocket, molded / geteiltes Antriebskettenrad, gespritzt

Delivery: Easy | Standard — Also suitable for Series 881 M, 881 B and 881 TAB

Part	Article-Nr.	Z-	Bore	PD	OD	S
518	51801	21	25	129,3	129,0	67,8
518	51802		30			
518	51803		35			
518	51804		40			
519	51901	23	25	141,2	142,0	73,8
519	51902		30			
519	51903		35			
519	51904		40			
520	52001	25	25	153,2	154,0	79,8
520	52002		30			
520	52003		35			
520	52004		40			

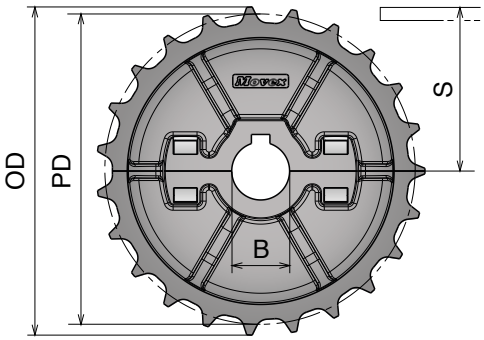

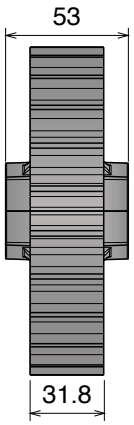

Ruota rinvio divisa, stampata
Split idler sprocket, molded / geteiltes Umlenkrad, gespritzt

Part	Article-Nr.	Z-	Bore	PD	OD	S
518	51851	21	25	129,3	129,0	67,8
518	51852		30			
518	51853		35			
518	51854		40			
519	51951	23	25	141,2	142,0	73,8
519	51952		30			
519	51953		35			
519	51954		40			
520	52051	25	25	153,2	154,0	79,8
520	52052		30			
520	52053		35			
520	52054		40			

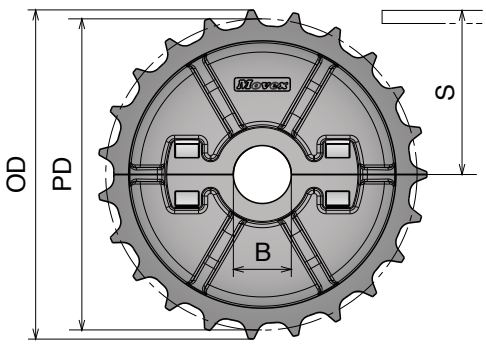

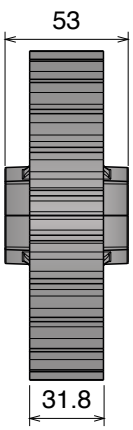

Materiale / *Material / Materialien:*
Poliammide/*Polyamide/Polyamid*
Viti: Acciaio inox/*Screws: Stainless steel/Schrauben: Edelstahl*
Dadi: ferro zincato/*Nuts: zinc plated steel/Mutter: verzinkter Stahl*

805-821

Ruota traino divisa, fresata
Split drive sprocket, machined / geteiltes Antriebskettenrad gefräst

Delivery: Easy Standard

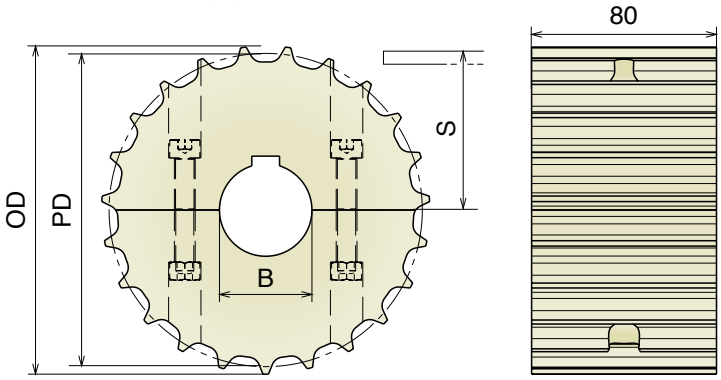

	Part	Article-Nr.	Z-	Bore	PD	OD	S
	521	52101	17	25	105,5	103,9	55,9
	521	52102		30			
	521	52103		35			
	521	52104		40			
	522	52201	19	25	117,3	117,0	61,9
	522	52202		30			
	522	52203		35			
	522	52204		40			
	523	52301	21	25	129,3	129,0	67,8
	523	52302		30			
Oadby	523	52303		35			
	523	52304		40			
	524	52401	23	25	141,2	142,0	73,8
	524	52402		30			
	524	52403		35			
	524	52404		40			
	525	52501	25	25	153,2	154,0	79,8
Oadby	525	52502		30			
Oadby	525	52503		35			
	525	52504		40			
	526	52601	27	25	165,2	166,8	85,8
	526	52602		30			
	526	52603		35			
	526	52604		40			
	527	52701	29	25	177,2	178,5	91,8
	527	52702		30			
	527	52703		35			
	527	52704		40			

Ruota rinvio divisa, fresata
Split idler sprocket, machined / geteiltes Umlenkrad, gefräst

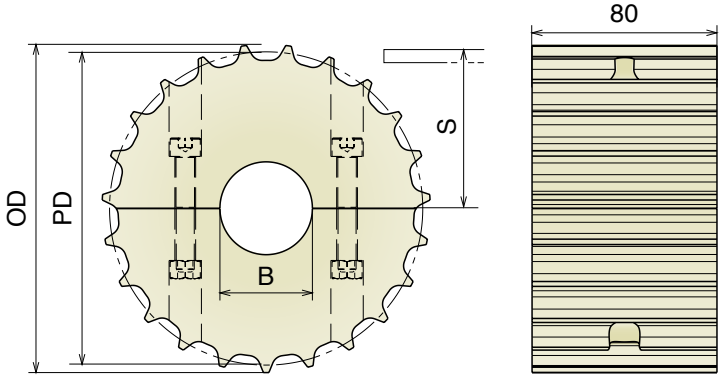

Part	Article-Nr.	Z-	Bore	PD	OD	S
521	52150	17	18*	105,5	103,9	55,9
521	52151		25			
521	52152		30			
521	52153		35			
521	52154		40			
522	52250	19	18*	117,3	117,0	61,9
522	52251		25			
522	52252		30			
522	52253		35			
522	52254		40			
523	52350	21	18*	129,3	129,0	67,8
523	52351		25			
523	52352		30			
523	52353		35			
523	52354		40			
524	52450	23	18*	141,2	142,0	73,8
524	52451		25			
524	52452		30			
524	52453		35			
524	52454		40			
525	52550	25	18*	153,2	154,0	79,8
525	52551		25			
525	52552		30			
525	52553		35			
525	52554		40			
526	52650	27	18*	165,2	166,8	85,8
526	52651		25			
526	52652		30			
526	52653		35			
526	52654		40			
527	52750	29	18*	177,2	178,5	91,8
527	52751		25			
527	52752		30			
527	52753		35			
527	52754		40			

*Plain Bore

Oadby Core product range
Oadby Available from stock in Leicester
Easy Available from stock in Italy
Standard Produced to order in Italy

Movex

Materiale / *Material / Materialien:*
Poliammide/*Polyamide/Polyamid*
Viti: Acciaio inox/*Screws: Stainless steel/Schrauben: Edelstahl*
Dadi: ferro zincato/*Nuts: zinc plated steel/Mutter: verzinkter Stahl*

8157

Ruota traino divisa, fresata
Split drive sprocket, machined / geteiltes Antriebskettenrad gefräst

Delivery: Easy | Standard — Also suitable for Series 8857 M - 8857 M GT

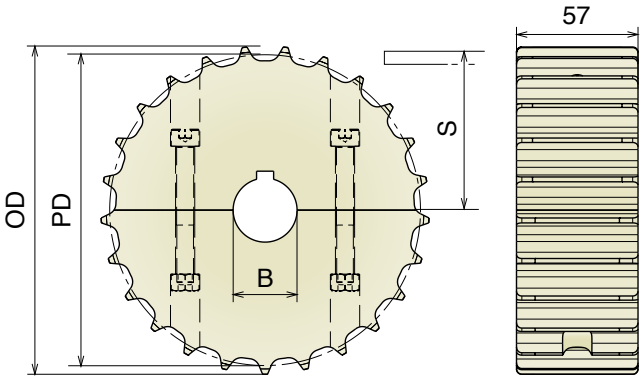

Part	Article-Nr.	Z-	Bore	PD	OD	S
528	52801	17	25	105,5	103,9	55,9
528	52802		30			
528	52803		35			
528	52804		40			
529	52901	19	25	117,3	117,0	61,9
529	52902		30			
529	52903		35			
529	52904		40			
530	53001	21	25	129,3	129,0	67,8
530	53002		30			
530	53003		35			
530	53004		40			
531	53101	23	25	141,2	142,0	73,8
531	53102		30			
531	53103		35			
531	53104		40			
532	53201	25	25	153,2	154,0	79,8
532	53202		30			
532	53203		35			
532	53204		40			
533	53301	27	25	165,2	166,8	85,8
533	53302		30			
533	53303		35			
533	53304		40			
534	53401	29	25	177,2	178,5	91,8
534	53402		30			
534	53403		35			
534	53404		40			

Ruota rinvio divisa, fresata
Split idler sprocket, machined / geteiltes Umlenkrad, gefräst

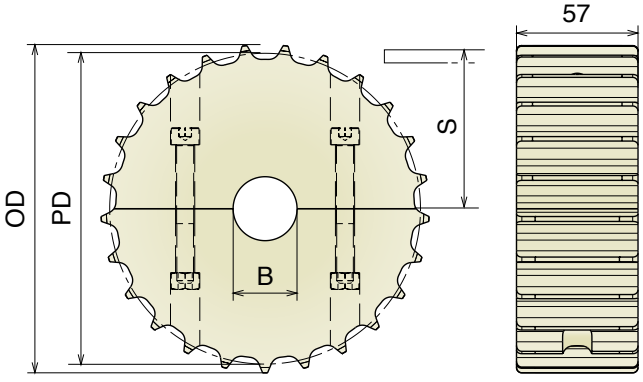

Part	Article-Nr.	Z-	Bore	PD	OD	S
528	52850	17	18*	105,5	103,9	55,9
528	52851		25			
528	52852		30			
528	52853		35			
528	52854		40			
529	52950	19	18*	117,3	117,0	61,9
529	52951		25			
529	52952		30			
529	52953		35			
529	52954		40			
530	53050	21	18*	129,3	129,0	67,8
530	53051		25			
530	53052		30			
530	53053		35			
530	53054		40			
531	53150	23	18*	141,2	142,0	73,8
531	53151		25			
531	53152		30			
531	53153		35			
531	53154		40			
532	53250	25	18*	153,2	154,0	79,8
532	53251		25			
532	53252		30			
532	53253		35			
532	53254		40			
533	53350	27	18*	165,2	166,8	85,8
533	53351		25			
533	53352		30			
533	53353		35			
533	53354		40			
534	53450	29	18*	177,2	178,5	91,8
534	53451		25			
534	53452		30			
534	53453		35			
534	53454		40			

*Plain Bore

Materiale / *Material / Materialien:*
Poliammide/*Polyamide/Polyamid*
Viti: Acciaio inox/*Screws: Stainless steel/Schrauben: Edelstahl*
Dadi: ferro zincato/*Nuts: zinc plated steel/Mutter: verzinkter Stahl*

820 Ruota traino divisa, fresata
Split drive sprocket, machined / geteiltes Antriebskettenrad gefräst

Delivery: Easy Standard

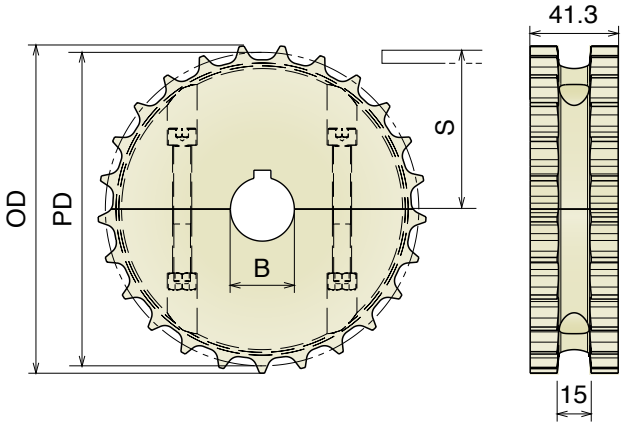

Part	Article-Nr.	Z-	Bore	PD	OD	S
535	53501	17	25	105,5	103,9	55,9
535	53502		30			
535	53503		35			
535	53504		40			
536	53601	19	25	117,3	117,0	61,9
536	53602		30			
536	53603		35			
536	53604		40			
537	53701	21	25	129,3	129,0	67,8
537	53702		30			
537	53703		35			
537	53704		40			
538	53801	23	25	141,2	142,0	73,8
538	53802		30			
538	53803		35			
538	53804		40			
539	53901	25	25	153,2	154,0	79,8
539	53902		30			
539	53903		35			
539	53904		40			
540	54001	27	25	165,2	166,8	85,8
540	54002		30			
540	54003		35			
540	54004		40			
541	54101	29	25	177,2	178,5	91,8
541	54102		30			
541	54103		35			
541	54104		40			

Ruota rinvio divisa, fresata
Split idler sprocket, machined / geteiltes Umlenkrad, gefräst

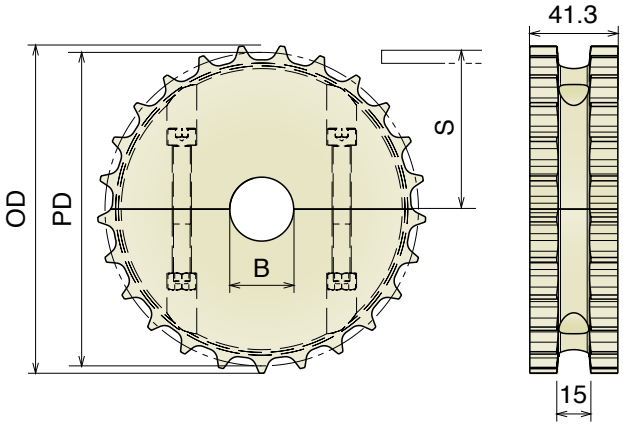

Part	Article-Nr.	Z-	Bore	PD	OD	S
535	53550	17	18*	105,5	103,9	55,9
535	53551		25			
535	53552		30			
535	53553		35			
535	53554		40			
536	53650	19	18*	117,3	117,0	61,9
536	53651		25			
536	53652		30			
536	53653		35			
536	53654		40			
537	53750	21	18*	129,3	129,0	67,8
537	53751		25			
537	53752		30			
537	53753		35			
537	53754		40			
538	53850	23	18*	141,2	142,0	73,8
538	53851		25			
538	53852		30			
538	53853		35			
538	53854		40			
539	53950	25	18*	153,2	154,0	79,8
539	53951		25			
539	53952		30			
539	53953		35			
539	53954		40			
540	54050	27	18*	165,2	166,8	85,8
540	54051		25			
540	54052		30			
540	54053		35			
540	54054		40			
541	54150	29	18*	177,2	178,5	91,8
541	54151		25			
541	54152		30			
541	54153		35			
541	54154		40			

*Plain Bore

Oadby Core product range
Oadby Available from stock in Leicester
Easy Available from stock in Italy
Standard Produced to order in Italy

Movex

Materiale / ***Material*** / ***Materialien:***
Poliammide rinforzato/Polyamide reinforced/Verstärktes Polyamid
Viti: Acciaio inox/*Screws: Stainless steel/Schrauben: Edelstahl*
Dadi: Ottone nichelato/*Nuts: Nickel plated brass/Mutter: Messing*

820 Ruota traino divisa, stampata
Split drive sprocket, molded / geteiltes Antriebskettenrad, gespritzt

Delivery: Easy Standard

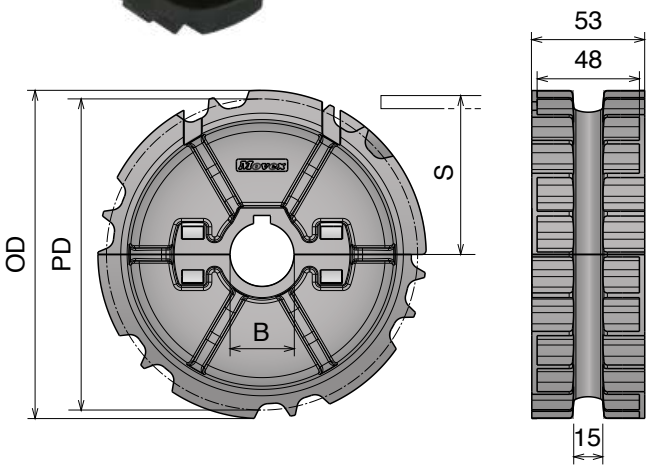

	Part	Article-Nr.	Z-	Bore	PD	OD	S
Oadby	542	54201	21	25	129,3	129,0	67,8
Oadby	542	54202		30			
	542	54203		35			
	542	54204		40			
Oadby	543	54301	23	25	141,2	142,0	73,8
Oadby	543	54302		30			
	543	54303		35			
	543	54304		40			
Oadby	544	54401	25	25	153,2	154,0	79,8
Oadby	544	54402		30			
	544	54403		35			
	544	54404		40			

Ruota rinvio divisa, stampata
Split idler sprocket, molded / geteiltes Umlenkrad, gespritzt

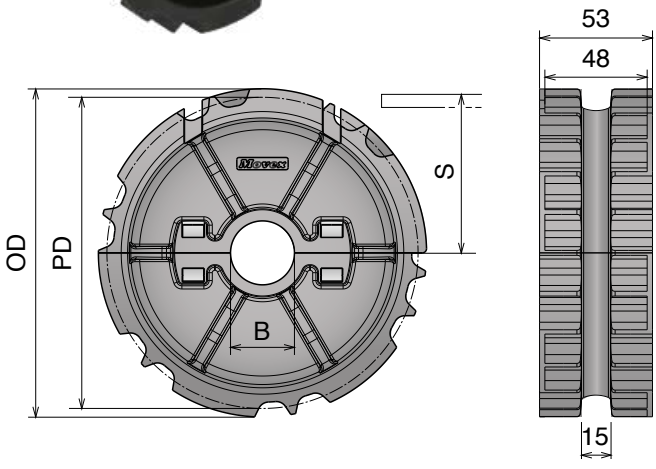

Part	Article-Nr.	Z-	Bore	PD	OD	S
542	54251	21	25	129,3	129,0	67,8
542	54252		30			
542	54253		35			
542	54254		40			
543	54351	23	25	141,2	142,0	73,8
543	54352		30			
543	54353		35			
543	54354		40			
544	54451	25	25	153,2	154,0	79,8
544	54452		30			
544	54453		35			
544	54454		40			

Materiale / *Material / Materialien:*
Poliammide/*Polyamide/Polyamid*
Viti: Acciaio inox/*Screws: Stainless steel/Schrauben: Edelstahl*
Dadi: ferro zincato/*Nuts: zinc plated steel/Mutter: verzinkter Stahl*

831

Ruota traino divisa, fresata
Split drive sprocket, machined / geteiltes Antriebskettenrad gefräst

Delivery: Easy Standard

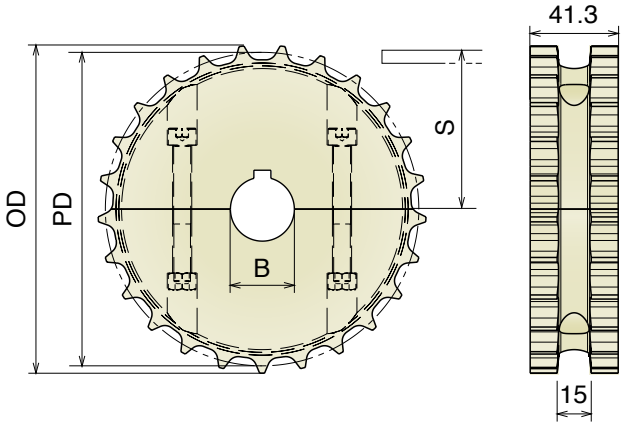

Part	Article-Nr.	Z-	Bore	PD	OD	S
535	53501	17	25	105,5	103,9	55,1
535	53502		30			
535	53503		35			
535	53504		40			
536	53601	19	25	117,3	117,0	61,1
536	53602		30			
536	53603		35			
536	53604		40			
537	53701	21	25	129,3	129,0	67,0
537	53702		30			
537	53703		35			
537	53704		40			
538	53801	23	25	141,2	142,0	73,0
538	53802		30			
538	53803		35			
538	53804		40			
539	53901	25	25	153,2	154,0	79,0
539	53902		30			
539	53903		35			
539	53904		40			
540	54001	27	25	165,2	166,8	85,0
540	54002		30			
540	54003		35			
540	54004		40			
541	54101	29	25	177,2	178,5	91,0
541	54102		30			
541	54103		35			
541	54104		40			

Ruota rinvio divisa, fresata
Split idler sprocket, machined / geteiltes Umlenkrad, gefräst

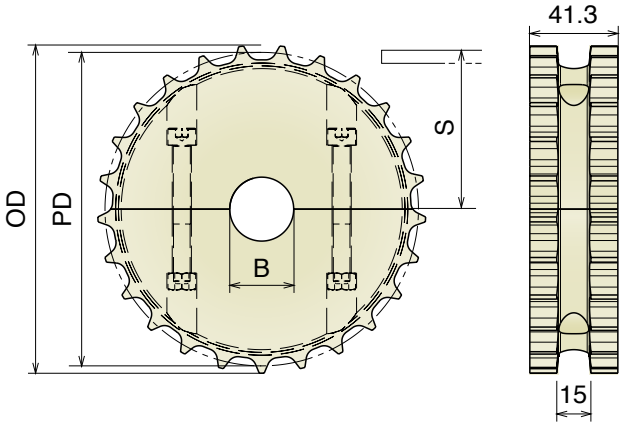

Part	Article-Nr.	Z-	Bore	PD	OD	S
535	53550	17	18*	105,5	103,9	55,1
535	53551		25			
535	53552		30			
535	53553		35			
535	53554		40			
536	53650	19	18*	117,3	117,0	61,1
536	53651		25			
536	53652		30			
536	53653		35			
536	53654		40			
537	53750	21	18*	129,3	129,0	67,0
537	53751		25			
537	53752		30			
537	53753		35			
537	53754		40			
538	53850	23	18*	141,2	142,0	73,0
538	53851		25			
538	53852		30			
538	53853		35			
538	53854		40			
539	53950	25	18*	153,2	154,0	79,0
539	53951		25			
539	53952		30			
539	53953		35			
539	53954		40			
540	54050	27	18*	165,2	166,8	85,0
540	54051		25			
540	54052		30			
540	54053		35			
540	54054		40			
541	54150	29	18*	177,2	178,5	91,0
541	54151		25			
541	54152		30			
541	54153		35			
541	54154		40			

*Plain Bore

Oadby Core product range
Oadby Available from stock in Leicester
Easy Available from stock in Italy
Standard Produced to order in Italy

Movex

831 Ruota traino divisa, stampata
Split drive sprocket, molded / geteiltes Antriebskettenrad, gespritzt

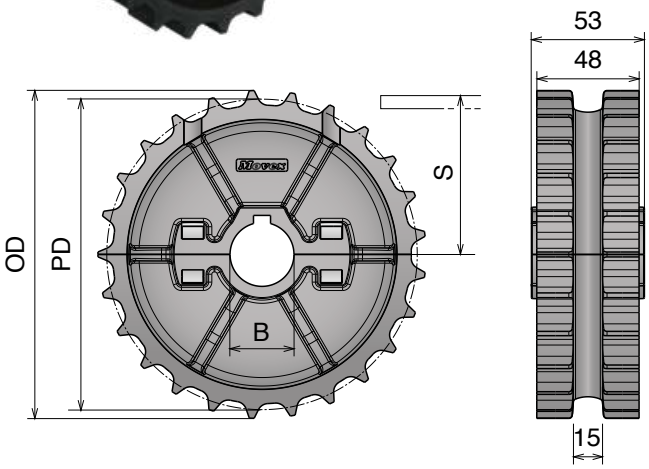

Part	Article-Nr.	Z-	Bore	PD	OD	S
542	54201-2L	21	25	129,3	129,0	67,0
542	54202-2L		30			
542	54203-2L		35			
542	54204-2L		40			
543	54301-2L	23	25	141,2	142,0	73,0
543	54302-2L		30			
543	54303-2L		35			
543	54304-2L		40			
544	54401-2L	25	25	153,2	154,0	79,0
544	54402-2L		30			
544	54403-2L		35			
544	54404-2L		40			

Ruota rinvio divisa, stampata
Split idler sprocket, molded / geteiltes Umlenkrad, gespritzt

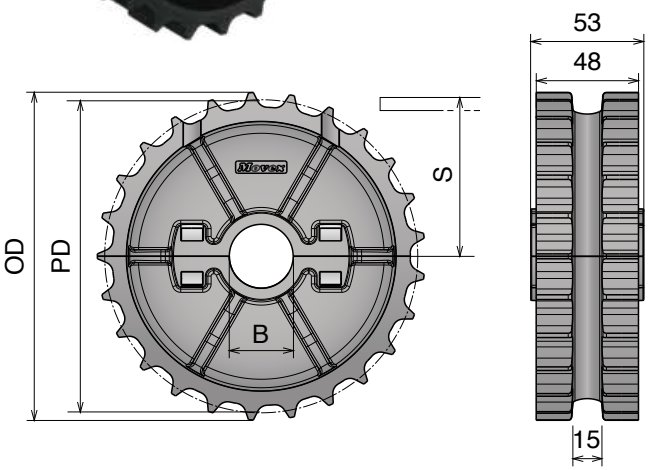

Part	Article-Nr.	Z-	Bore	PD	OD	S
542	54251-2L	21	25	129,3	129,0	67,0
542	54252-2L		30			
542	54253-2L		35			
542	54254-2L		40			
543	54351-2L	23	25	141,2	142,0	73,0
543	54352-2L		30			
543	54353-2L		35			
543	54354-2L		40			
544	54451-2L	25	25	153,2	154,0	79,0
544	54452-2L		30			
544	54453-2L		35			
544	54454-2L		40			

Materiale / *Material / Materialien:*
Poliammide/*Polyamide/Polyamid*
Viti: Acciaio inox/*Screws: Stainless steel/Schrauben: Edelstahl*
Dadi: ferro zincato/*Nuts: zinc plated steel/Mutter: verzinkter Stahl*

880 Ruota traino divisa, fresata
Split drive sprocket, machined / geteiltes Antriebskettenrad gefräst

Delivery: Easy Standard — Used also for Series 828 - 878 TAB - 879 M - 879 TAB - 888 TAB - 888 TAB GT

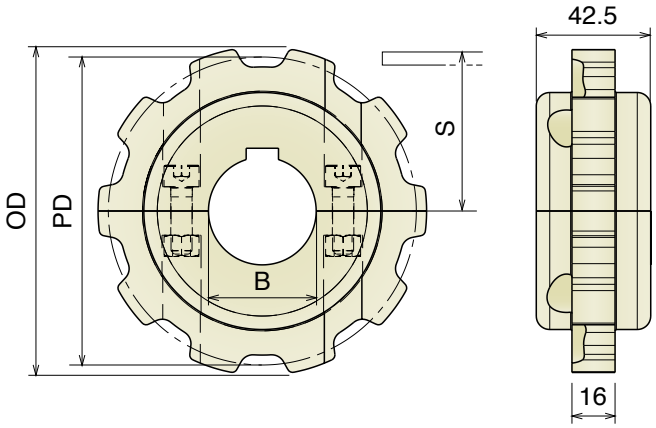

Part	Article-Nr.	Z-	Bore	PD	OD	S
545	54501	9	25	111,4	110,0	59,3
545	54502		30			
545	54503		35			
545	54504		40			
546	54601	10	25	123,3	122,0	65,25
546	54602		30			
546	54603		35			
546	54604		40			
547	54701	11	25	135,2	135,0	71,2
547	54702		30			
547	54703		35			
547	54704		40			
548	54801	12	25	147,2	147,3	77,2
548	54802		30			
548	54803		35			
548	54804		40			

Ruota rinvio divisa, fresata
Split idler sprocket, machined / geteiltes Umlenkrad, gefräst

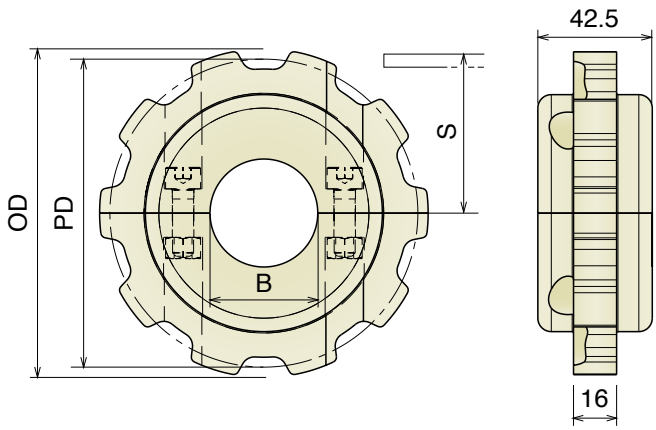

Part	Article-Nr.	Z-	Bore	PD	OD	S
545	54550	9	18*	111,4	110,0	59,3
545	54551		25			
545	54552		30			
545	54553		35			
545	54554		40			
546	54650	10	18*	123,3	122,0	65,25
546	54651		25			
546	54652		30			
546	54653		35			
546	54654		40			
547	54750	11	18*	135,2	135,0	71,2
547	54751		25			
547	54752		30			
547	54753		35			
547	54754		40			
548	54850	12	18*	147,2	147,3	77,2
548	54851		25			
548	54852		30			
548	54853		35			
548	54854		40			

*Plain Bore

Oadby Core product range
Oadby Available from stock in Leicester
Easy Available from stock in Italy
Standard Produced to order in Italy

Movex

Materiale / ***Material / Materialien:***
Poliammide rinforzato/Polyamide reinforced/Verstärktes Polyamid
Viti: Acciaio inox/*Screws: Stainless steel/Schrauben: Edelstahl*
Dadi: Ottone nichelato/*Nuts: Nickel plated brass/Mutter: Messing*

880 Ruota traino divisa, stampata
Split drive sprocket, molded / geteiltes Antriebskettenrad, gespritzt

Delivery: Easy | Standard — Used also for Series 828 - 878 TAB - 879 M - 879 TAB - 888 TAB - 888 TAB GT

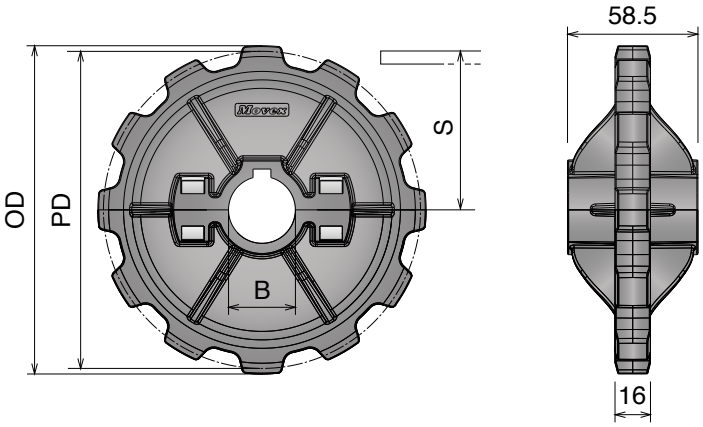

	Part	Article-Nr.	Z-	Bore	PD	OD	S
Oadby	549	54901	10	25	123,3	122,0	65,25
Oadby	549	54902		30			
	549	54903		35			
	549	54904		40			
Oadby	550	55001	12	25	147,2	147,3	77,2
Oadby	550	55002		30			
	550	55003		35			
	550	55004		40			

Ruota rinvio divisa, stampata
Split idler sprocket, molded / geteiltes Umlenkrad, gespritzt

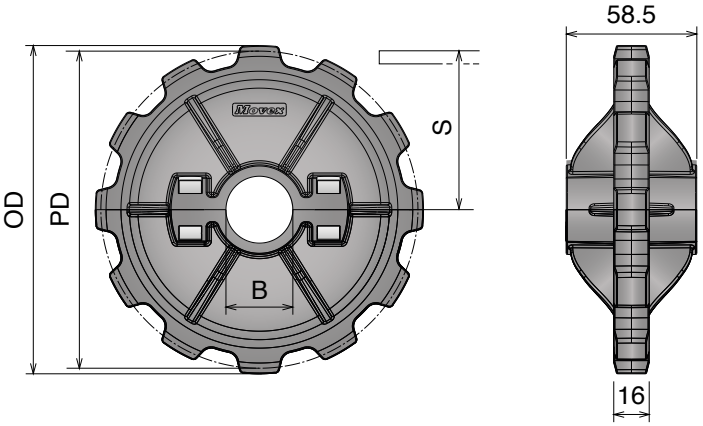

	Part	Article-Nr.	Z-	Bore	PD	OD	S
Oadby	549	54951	10	25	123,3	122,0	65,25
Oadby	549	54952		30			
	549	54953		35			
	549	54954		40			
Oadby	550	55051	12	25	147,2	147,3	77,2
Oadby	550	55052		30			
	550	55053		35			
	550	55054		40			

Materiale / *Material / Materialien:*
Poliammide/*Polyamide/Polyamid*
Viti: Acciaio inox/*Screws: Stainless steel/Schrauben: Edelstahl*
Dadi: ferro zincato/*Nuts: zinc plated steel/Mutter: verzinkter Stahl*

882 Ruota traino divisa, fresata
Split drive sprocket, machined / geteiltes Antriebskettenrad gefräst

Delivery: Easy Standard Also suitable for Series 8257

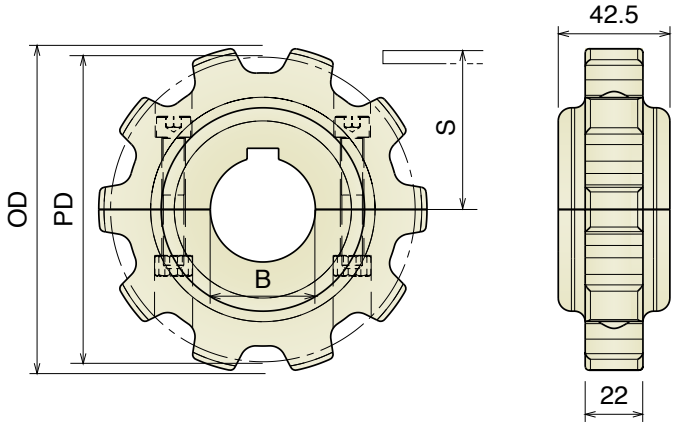

Part	Article-Nr.	Z-	Bore	PD	OD	S
551	55101	9	25	111,4	112,0	60,5
551	55102		30			
551	55103		35			
551	55104		40			
552	55201	10	25	123,2	125,0	66,4
552	55202		30			
552	55203		35			
552	55204		40			
553	55301	11	25	135,2	137,0	72,4
553	55302		30			
553	55303		35			
553	55304		40			
554	55401	12	25	147,2	149,0	78,4
554	55402		30			
554	55403		35			
554	55404		40			
554	55406		50			

Ruota rinvio divisa, fresata
Split idler sprocket, machined / geteiltes Umlenkrad, gefräst

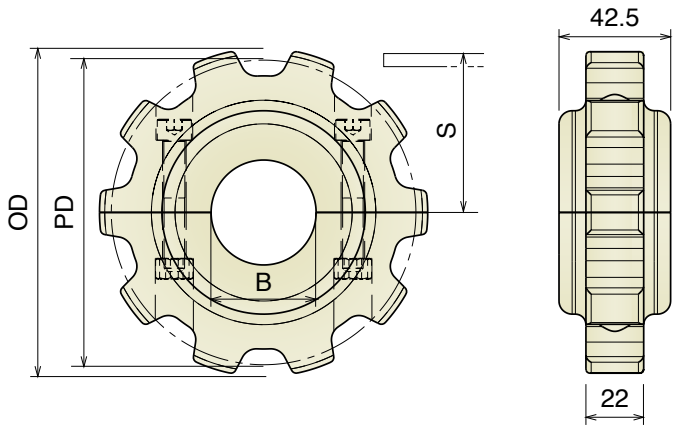

Part	Article-Nr.	Z-	Bore	PD	OD	S
551	55150	9	18*	111,4	112,0	60,5
551	55151		25			
551	55152		30			
551	55153		35			
551	55154		40			
552	55250	10	18*	123,2	125,0	66,4
552	55251		25			
552	55252		30			
552	55253		35			
552	55254		40			
553	55350	11	18*	135,2	137,0	72,4
553	55351		25			
553	55352		30			
553	55353		35			
553	55354		40			
554	55450	12	18*	147,2	149,0	78,4
554	55451		25			
554	55452		30			
554	55453		35			
554	55454		40			

*Plain Bore

Oadby Core product range
Oadby Available from stock in Leicester
Easy Available from stock in Italy
Standard Produced to order in Italy
Movex

Materiale / ***Material / Materialien:***
Poliammide rinforzato/Polyamide reinforced/Verstärktes Polyamid
Viti: Acciaio inox/*Screws: Stainless steel/Schrauben: Edelstahl*
Dadi: Ottone nichelato/*Nuts: Nickel plated brass/Mutter: Messing*

882 Ruota traino divisa, stampata
Split drive sprocket, molded / geteiltes Antriebskettenrad, gespritzt

Delivery: Easy Standard Also suitable for Series 8257

Part	Article-Nr.	Z-	Bore	PD	OD	S
556	55601	12	25	147,2	149,0	78,4
556	55602		30			
556	55603		35			
556	55604		40			

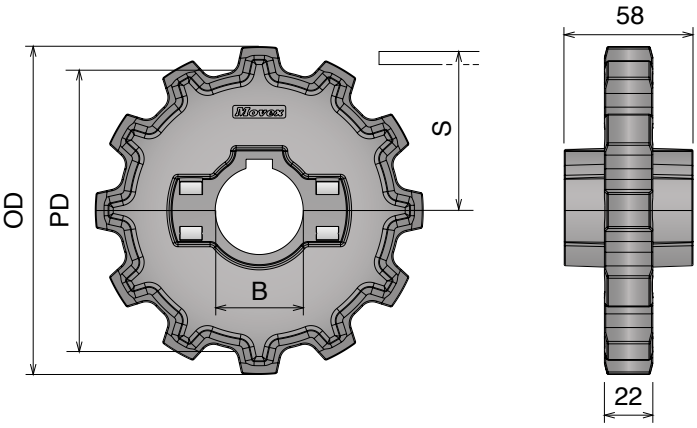

Ruota rinvio divisa, stampata
Split idler sprocket, molded / geteiltes Umlenkrad, gespritzt

Part	Article-Nr.	Z-	Bore	PD	OD	S
556	55651	12	25	147,2	149,0	78,4
556	55652		30			
556	55653		35			
556	55654		40			

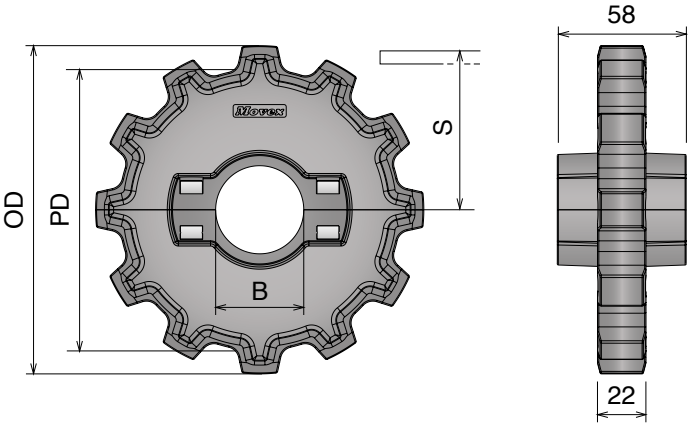

Materiale / *Material / Materialien:*
Poliammide/*Polyamide/Polyamid*
Viti: Acciaio inox/*Screws: Stainless steel/Schrauben: Edelstahl*
Dadi: ferro zincato/*Nuts: zinc plated steel/Mutter: verzinkter Stahl*

512 Ruota traino divisa, fresata
Split drive sprocket, machined / geteiltes Antriebskettenrad gefräst

Delivery: Easy Standard

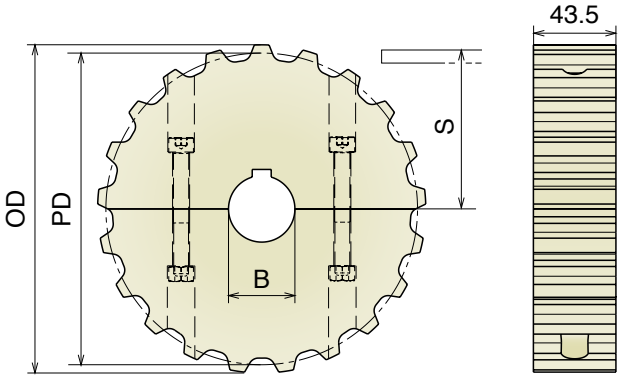

Part	Article-Nr.	Z-	Bore	PD	OD	S
557	55701	13	25	108,0	106,1	57,2
557	55702		30			
557	55703		35			
557	55704		40			
558	55801	15	25	124,0	122,2	65,2
558	55802		30			
558	55803		35			
558	55804		40			
559	55901	17	25	138,2	138,2	72,3
559	55902		30			
559	55903		35			
559	55904		40			
560	56001	18	25	146,3	146,4	76,4
560	56002		30			
560	56003		35			
560	56004		40			
561	56101	19	25	154,3	155,7	80,4
561	56102		30			
561	56103		35			
561	56104		40			
562	56201	21	25	170,4	173,0	88,4
562	56202		30			
562	56203		35			
562	56204		40			
563	56301	23	25	186,5	190,0	96,5
563	56302		30			
563	56303		35			
563	56304		40			
564	56401	25	25	202,7	204,0	104,6
564	56402		30			
564	56403		35			
564	56404		40			

Ruota rinvio divisa, fresata
Split idler sprocket, machined / geteiltes Umlenkrad, gefräst

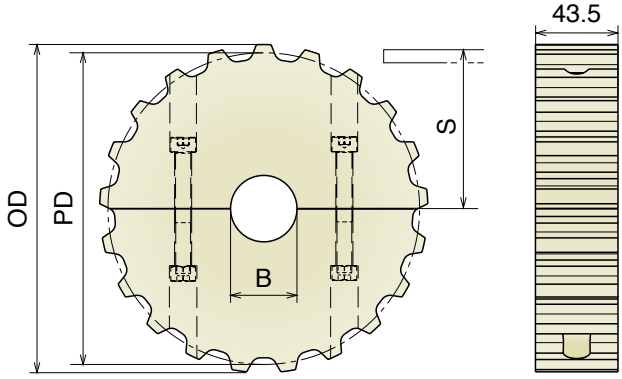

Part	Article-Nr.	Z-	Bore	PD	OD	S
557	55750	13	18*	108,0	106,1	57,2
557	55751		25			
557	55752		30			
557	55753		35			
557	55754		40			
558	55850	15	18*	124,0	122,2	65,2
558	55851		25			
558	55852		30			
558	55853		35			
558	55854		40			
559	55950	17	18*	138,2	138,2	72,3
559	55951		25			
559	55952		30			
559	55953		35			
559	55954		40			
560	56050	18	18*	146,3	146,4	76,4
560	56051		25			
560	56052		30			
560	56053		35			
560	56054		40			
561	56150	19	18*	154,3	155,7	80,4
561	56151		25			
561	56152		30			
561	56153		35			
561	56154		40			
562	56250	21	18*	170,4	173,0	88,4
562	56251		25			
562	56252		30			
562	56253		35			
562	56254		40			
563	56350	23	18*	186,5	190,0	96,5
563	56351		25			
563	56352		30			
563	56353		35			
563	56354		40			
564	56450	25	18*	202,7	204,0	104,6
564	56451		25			
564	56452		30			
564	56453		35			
564	56454		40			

*Plain Bore

Oadby Core product range
Oadby Available from stock in Leicester
Easy Available from stock in Italy
Standard Produced to order in Italy

Movex

Materiale / *Material / Materialien:*
Poliammide/*Polyamide/Polyamid*
Viti: Acciaio inox/*Screws: Stainless steel/Schrauben: Edelstahl*
Dadi: ferro zincato/*Nuts: zinc plated steel/Mutter: verzinkter Stahl*

815

Ruota flangiata divisa, fresata
Split sprocket with guides, machined / Geteiltes Kettenrad mit Bordscheibe, gefräst

RANGE EXTENSION

Delivery: Easy Standard — Anelli Inox / SS Guide-rings / Edelstahl Bordscheibe

Also suitable for Series 881 M

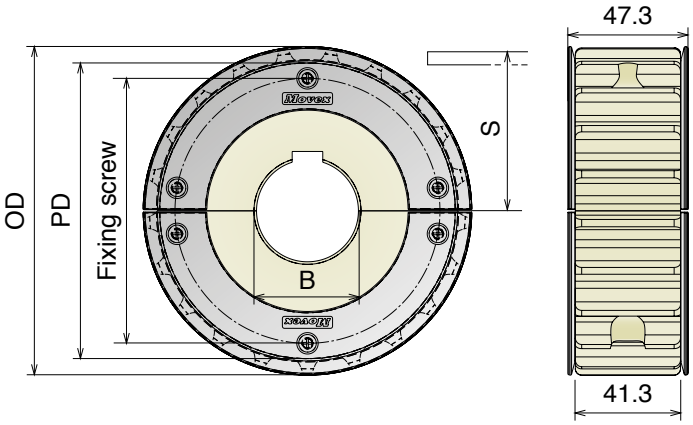

Part	Article-Nr.	Z-	Bore	PD	OD	S	Ø screw
501	50101G	17	25	105,5	103,9	55,9	80,0
501	50102G		30				
501	50103G		35				
501	50104G		40				
503	50301G	21	25	129,3	129,0	67,8	104,0
503	50302G		30				
503	50303G		35				
503	50304G		40				
504	50401G	23	25	141,2	142,0	73,8	116,0
504	50402G		30				
504	50403G		35				
504	50404G		40				
505	50501G	25	25	153,2	154,0	79,8	128,0
505	50502G		30				
505	50503G		35				
505	50504G		40				

8157

Ruota flangiata divisa, fresata
Split sprocket with guides, machined / Geteiltes Kettenrad mit Bordscheibe, gefräst

RANGE EXTENSION

Anelli Inox / SS Guide-rings / Edelstahl Bordscheibe

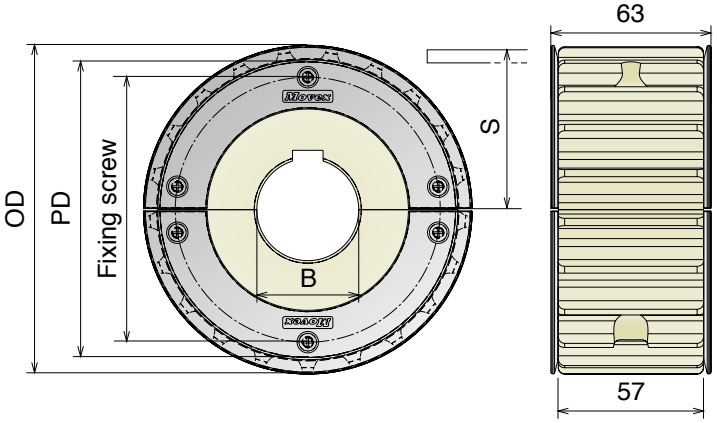

Part	Article-Nr.	Z-	Bore	PD	OD	S	Ø screw
528	52801G	17	25	105,5	103,9	55,9	80,0
528	52802G		30				
528	52803G		35				
528	52804G		40				
530	53001G	21	25	129,3	129,0	67,8	104,0
530	53002G		30				
530	53003G		35				
530	53004G		40				
531	53101G	23	25	141,2	142,0	73,8	116,0
531	53102G		30				
531	53103G		35				
531	53104G		40				
532	53201G	25	25	153,2	154,0	79,8	128,0
532	53202G		30				
532	53203G		35				
532	53204G		40				

Materiale / *Material / Materialien:*
Poliammide/*Polyamide/Polyamid*
Viti: Acciaio inox/*Screws: Stainless steel/Schrauben: Edelstahl*
Dadi: ferro zincato/*Nuts: zinc plated steel/Mutter: verzinkter Stahl*

805

Ruota flangiata divisa, fresata
Split sprocket with guides, machined / Geteiltes Kettenrad mit Bordscheibe, gefräst

RANGE EXTENSION

Delivery: Easy Standard — Anelli Inox / SS Guide-rings / Edelstahl Bordscheibe

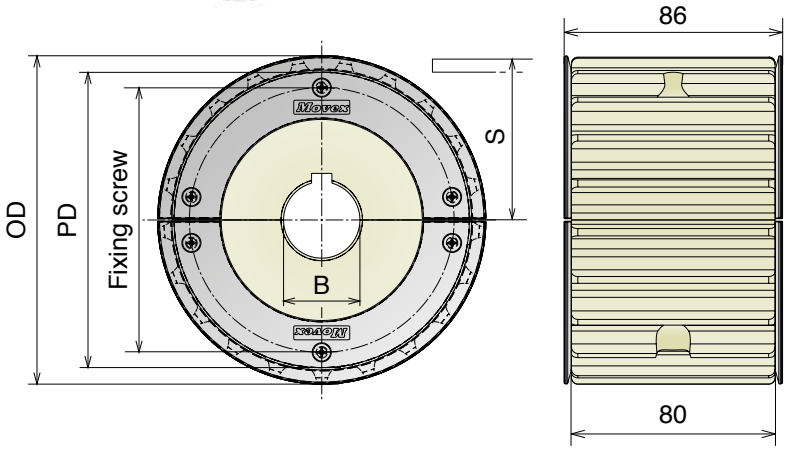

Part	Article-Nr.	Z-	Bore	PD	OD	S	Ø screw
521	52101G	17	25	105,5	103,9	55,9	80,0
521	52102G		30				
521	52103G		35				
521	52104G		40				
523	52301G	21	25	129,3	129,0	67,8	104,0
523	52302G		30				
523	52303G		35				
523	52304G		40				
524	52401G	23	25	141,2	142,0	73,8	116,0
524	52402G		30				
524	52403G		35				
524	52404G		40				
525	52501G	25	25	153,2	154,0	79,8	128,0
525	52502G		30				
525	52503G		35				
525	52504G		40				

820

Ruota flangiata divisa, fresata
Split sprocket with guides, machined / Geteiltes Kettenrad mit Bordscheibe, gefräst

RANGE EXTENSION

Anelli Inox / SS Guide-rings / Edelstahl Bordscheibe

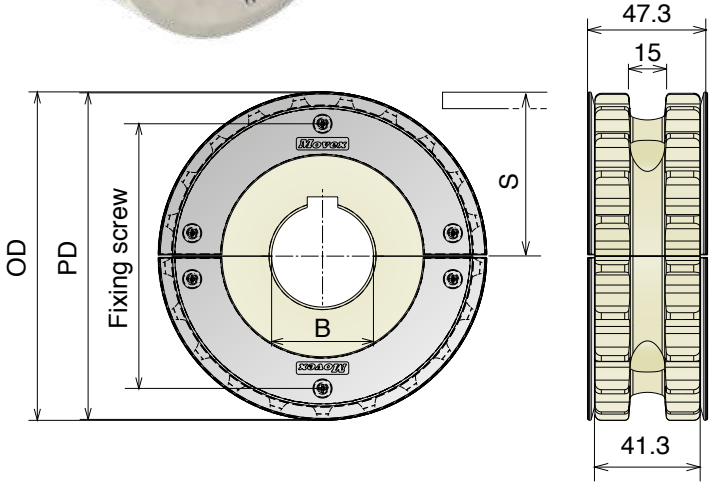

Part	Article-Nr.	Z-	Bore	PD	OD	S	Ø screw
535	53501G	17	25	105,5	103,9	55,9	80,0
535	53502G		30				
535	53503G		35				
535	53504G		40				
537	53701G	21	25	129,3	129,0	67,8	104,0
537	53702G		30				
537	53703G		35				
537	53704G		40				
538	53801G	23	25	141,2	142,0	73,8	116,0
538	53802G		30				
538	53803G		35				
538	53804G		40				
539	53901G	25	25	153,2	154,0	79,8	128,0
539	53902G		30				
539	53903G		35				
539	53904G		40				

Oadby Core product range
Oadby Available from stock in Leicester
Easy Available from stock in Italy
Standard Produced to order in Italy

Movex®

512 Ruota flangiata divisa, fresata
Split sprocket with guides, machined / Geteiltes Kettenrad mit Bordscheibe, gefräst

Anelli Inox / SS Guide-rings / Edelstahl Bordscheibe

Part	Article-Nr.	Z-	Bore	PD	OD	S	Ø screw
576	57601G	18	25	146,3	147,0	76,4	110,0
576	57602G		30				
576	57603G		35				
576	57604G		40				

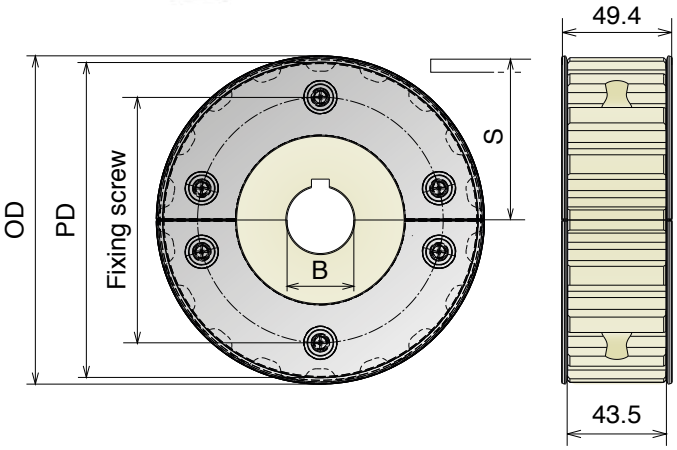

Materiale / *Material / Materialien:*
Poliammide/*Polyamide/Polyamid*
Viti: Acciaio inox/*Screws: Stainless steel/Schrauben: Edelstahl*
Dadi: ferro zincato/*Nuts: zinc plated steel/Mutter: verzinkter Stahl*

815 MINI

Ruota traino divisa, fresata
Split drive sprocket, machined / geteiltes Antriebskettenrad gefräst

Delivery: Easy Standard

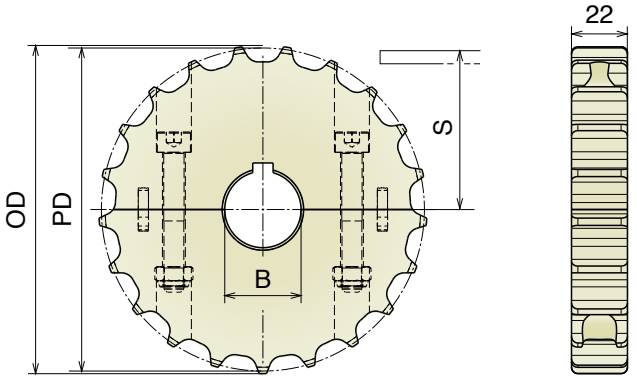

Part	Article-Nr.	Z-	Bore	PD	OD	S
580	58001	19	25	117,3	117,0	61,9
580	58002		30			
580	58003		35			
580	58004		40			
581	58101	21	25	129,3	129,0	67,8
581	58102		30			
581	58103		35			
581	58104		40			
582	58201	23	25	141,2	142,0	73,8
582	58202		30			
582	58203		35			
582	58204		40			
583	58301	25	25	153,2	154,0	79,8
583	58302		30			
583	58303		35			
583	58304		40			

Ruota rinvio divisa, fresata
Split idler sprocket, machined / geteiltes Umlenkrad, gefräst

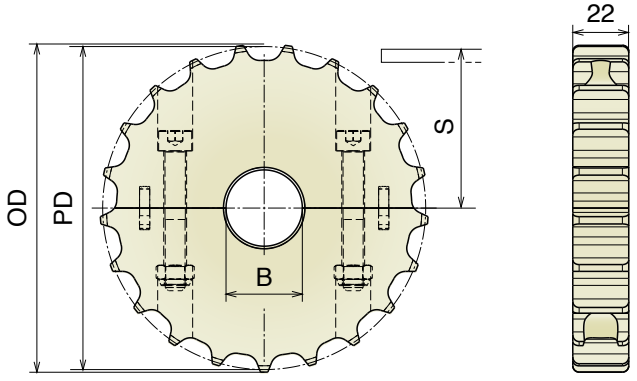

Part	Article-Nr.	Z-	Bore	PD	OD	S
580	58050	19	18*	117,3	117,0	61,9
580	58051		25			
580	58052		30			
580	58053		35			
580	58054		40			
581	58150	21	18*	129,3	129,0	67,8
581	58151		25			
581	58152		30			
581	58153		35			
581	58154		40			
582	58250	23	18*	141,2	142,0	73,8
582	58251		25			
582	58252		30			
582	58253		35			
582	58254		40			
583	58350	25	18*	153,2	154,0	79,8
583	58351		25			
583	58352		30			
583	58353		35			
583	58354		40			

*Plain Bore

Oadby Core product range
Oadby Available from stock in Leicester
Easy Available from stock in Italy
Standard Produced to order in Italy

Movex

Materiale / *Material / Materialien:*
Poliammide/*Polyamide/Polyamid*
Viti: Acciaio inox/*Screws: Stainless steel/Schrauben: Edelstahl*
Dadi: ferro zincato/*Nuts: zinc plated steel/Mutter: verzinkter Stahl*

CC 600

Ruota rinvio divisa, fresata
Split idler sprocket, machined / geteiltes Umlenkrad, gefräst

For adequate quantities these sprockets can be delivered with finished bore.

Part	Article-Nr.	Z-	Bore	PD	OD	S
565	56550	8	20	166,0	172,0	70,0
566	56650	10	20	205,0	215,0	89,5
567	56750	12	20	246,0	256,0	110,0
568	56850	14	20	286,0	297,0	130,0

Other bores available on request

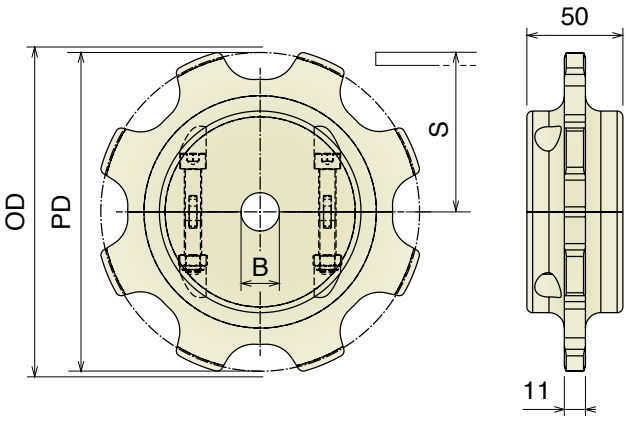

CC 1400

Ruota rinvio, fresata
Idler sprocket, machined / Umlenkrad, gefräst

For adequate quantities these sprockets can be delivered with finished bore.

Part	Article-Nr.	Z-	Bore	PD	OD	S
570	57050E	7	20	190,0	202,0	78,0
571	57150E	8	20	218,0	227,6	92,0
572	57250E	10	20	267,0	279,0	116,0

Other bores available on request

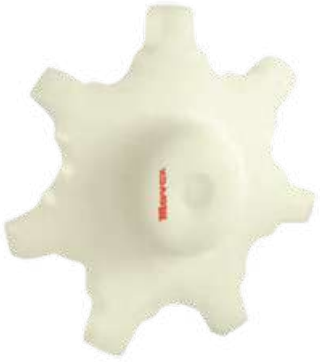

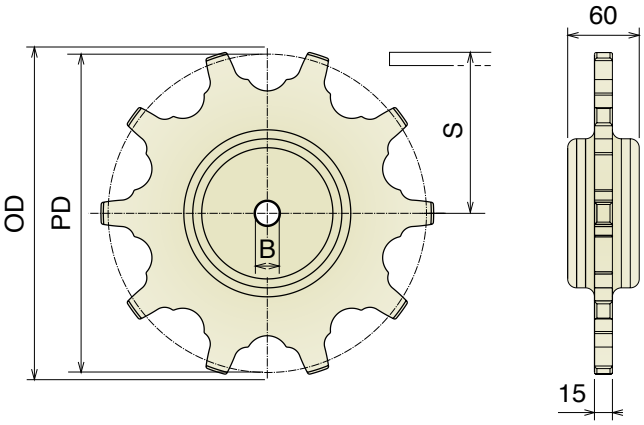

Materiale / *Material / Materialien:*
Poliammide/*Polyamide/Polyamid*
Viti: Acciaio inox/*Screws: Stainless steel/Schrauben: Edelstahl*
Dadi: ferro zincato/*Nuts: zinc plated steel/Mutter: verzinkter Stahl*

1701-1706-765 NO GAP

Ruota traino divisa, fresata
Split drive sprocket, machined / geteiltes Antriebskettenrad gefräst

Delivery: Easy Standard

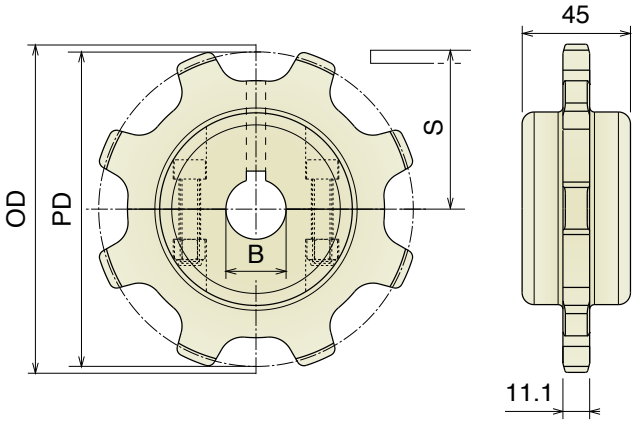

Part	Article-Nr.	Z-	Bore	PD	OD	S
573	57301	8	25	130,7	132,75	53,0
573	57302		30			
573	57303		35			
573	57304		40			
574	57401	10	25	161,8	165,1	69,0
574	57402		30			
574	57403		35			
574	57404		40			
575	57501	13	25	208,9	215,0	93,5
575	57502		30			
575	57503		35			
575	57504		40			

Ruota rinvio divisa, fresata
Split idler sprocket, machined / geteiltes Umlenkrad, gefräst

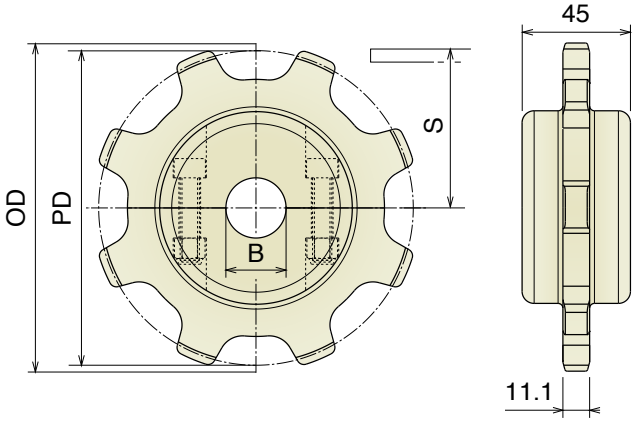

Part	Article-Nr.	Z-	Bore	PD	OD	S
573	57350	8	18*	130,7	132,75	53,0
573	57351		25			
573	57352		30			
573	57353		35			
573	57354		40			
574	57450	10	18*	161,8	165,1	69,0
574	57451		25			
574	57452		30			
574	57453		35			
574	57454		40			
575	57550	13	18*	208,9	215,0	93,5
575	57551		25			
575	57552		30			
575	57553		35			
575	57554		40			

*Plain Bore

Oadby Core product range
Oadby Available from stock in Leicester
Easy Available from stock in Italy
Standard Produced to order in Italy

Movex

43 MF-63 MF

Ruota traino, stampata
Drive sprocket, molded / Antriebskettenrad, gespritzt

Delivery: Easy Standard

Part	Article-Nr.	Z-	Bore	PD	OD	S
586	58600	11	20	90,2	94,5	56,5

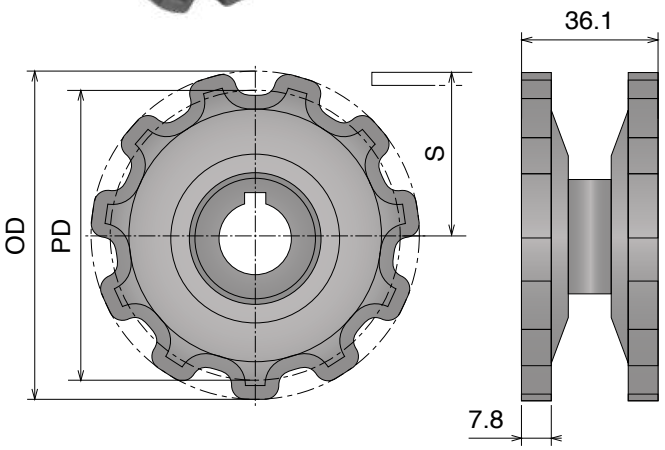

103 MF

Ruota traino, stampata
Drive sprocket, molded / Antriebskettenrad, gespritzt

Delivery: Easy Standard

Part	Article-Nr.	Z-	Bore	PD	OD	OD
587	58701	12	25	129,4	144,5	82,5

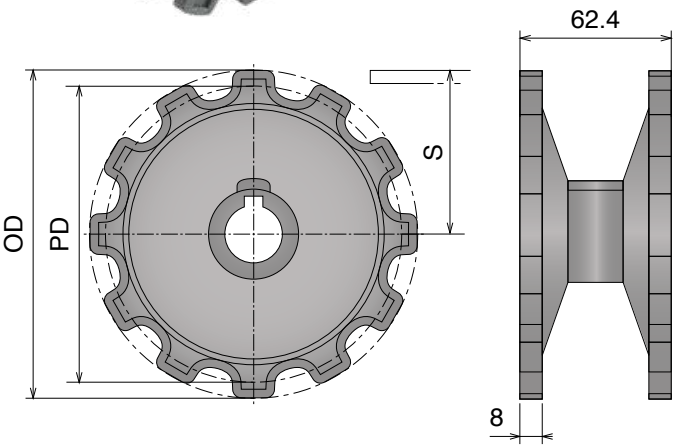

Materiale / *Material / Materialien:*
Poliammide/*Polyamide/Polyamid*

83 MF

Ruota traino, fresata
Drive sprocket, machined / Antriebskettenrad gefräst

Part	Article-Nr.	Z-	Bore	PD	OD	S
589	58901E	9	25	97,9	108,5	62,0
589	58902E		30			
589	58903E		35			
589	58904E		40			
588	58801E	12	25	129,4	140,0	77,7
588	58802E		30			
588	58803E		35			
588	58804E		40			

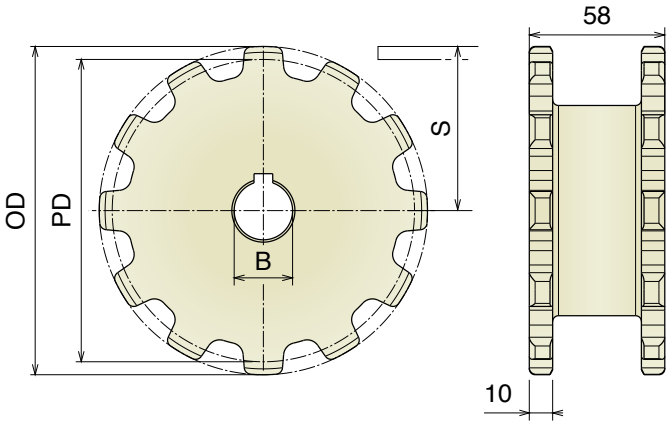

Ruota rinvio, fresata
Idler sprocket, machined / Umlenkrad, gefräst

Part	Article-Nr.	Z-	Bore	PD	OD	S
589	58950E	9	18*	97,9	108,5	62,0
589	58951E		25			
589	58952E		30			
589	58953E		35			
589	58954E		40			
588	58850E	12	18*	129,4	140,0	77,7
588	58851E		25			
588	58852E		30			
588	58853E		35			
588	58854E		40			

*Plain Bore

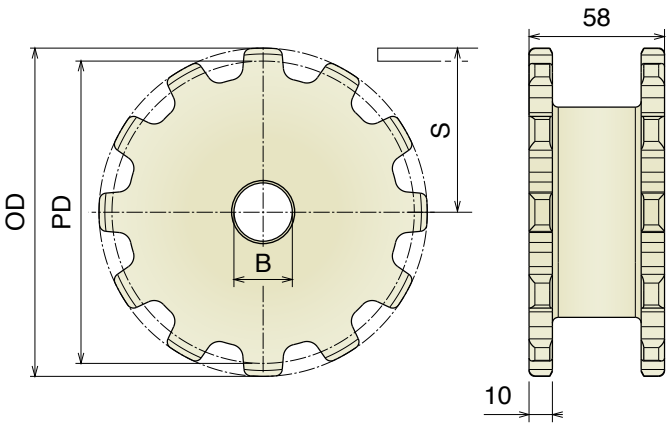

Oadby Core product range
Oadby Available from stock in Leicester
Easy Available from stock in Italy
Standard Produced to order in Italy
Movex

83 M-140 M

Ruota traino divisa, fresata
Split drive sprocket, machined / geteiltes Antriebskettenrad gefräst

Part	Article-Nr.	Z-	Bore	PD	OD	S
590	59001	9	25	111,4	108,0	68,5
590	59002		30			
590	59003		35			
590	59004		40			
591	59101	12	25	147,2	145,3	86
591	59102		30			
591	59103		35			
591	59104		40			

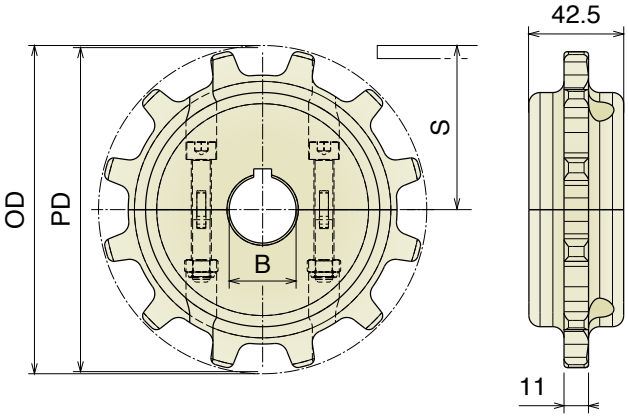

Ruota rinvio divisa, fresata
Split idler sprocket, machined / geteiltes Umlenkrad, gefräst

Part	Article-Nr.	Z-	Bore	PD	OD	S
590	59050	9	18*	111,4	108,0	68,5
590	59051		25			
590	59052		30			
590	59053		35			
590	59054		40			
591	59150	12	18*	147,2	145,3	86
591	59151		25			
591	59152		30			
591	59153		35			
591	59154		40			

*Plain Bore

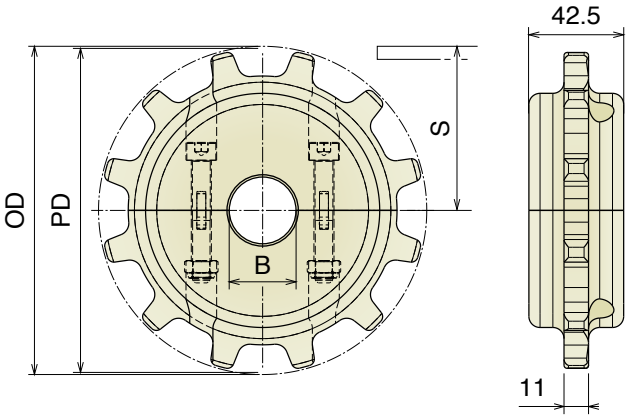

Materiale / *Material* / *Materialien:*
Polietilene UHMW-PE
Polyethylene UHMW-PE
Polyäthylen UHMW-PE

Turning disks

RANGE EXTENSION

The use of drive disks, idler disks and turnings disks enables the design of the conveyor to be realized with many curves, greatly reducing the PV and guaranteeing exceeding performances compared to traditional system.

Thanks to our machined versions, superior tolerances and planarity are provided; it will then become easier to realize longer conveyors either at the same level or staggered, inclined or declined.

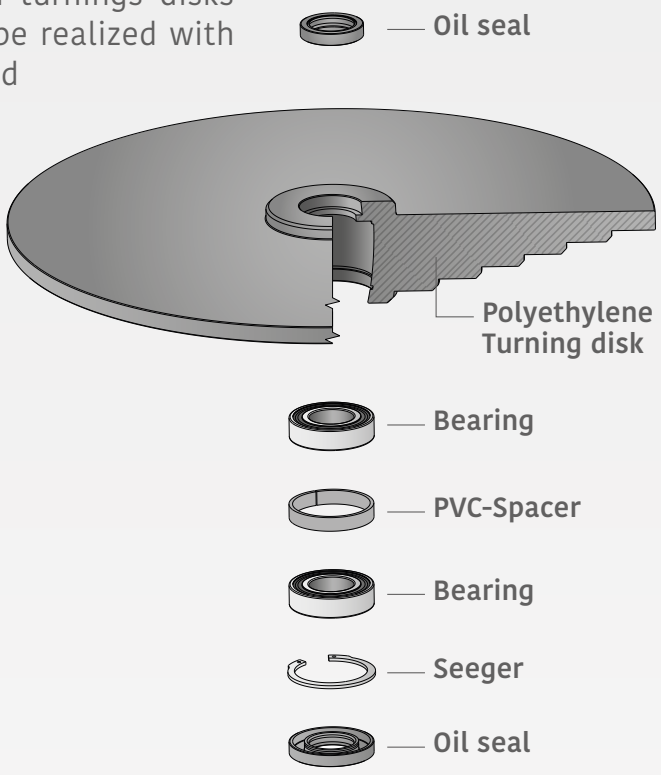

DRIVE DISK

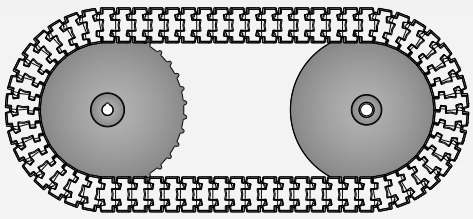

TURNING DISK

TYPES AVAILABLE

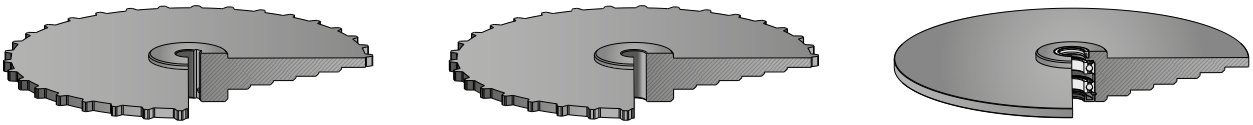

DRIVE DISK

IDLER DISK

TURNING DISK

POSSIBLE APPLICATIONS

MACHINED DISK
OPTION A

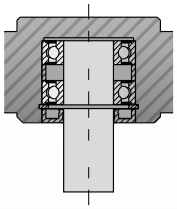

CLOSED VERSION

MACHINED DISK
OPTION B

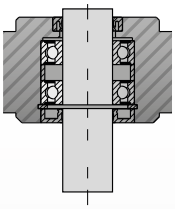

OPEN VERSION

MACHINED DISK
OPTION C

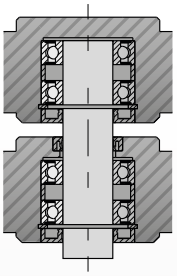

CLOSED VERSION
+ OPEN VERSION

MACHINED DISK
OPTION D

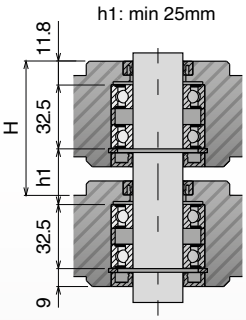

OPEN VERSION
+ OPEN VERSION

MOLDED DISK
OPTION A

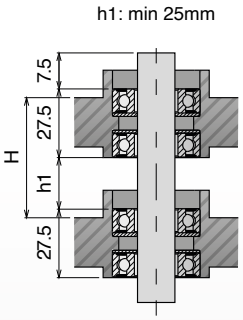

OPEN VERSION
+ OPEN VERSION

For a correct installation of the shaft and the position of the circlips, please contact your sales representative.

NEW

878 TAB
Ruota tangenziale
Tangential sprockets / Tangentiale kettenräder

Suitable for 878 TAB | Drive disk with grub screws included

Drive disk, machined

pg. 164

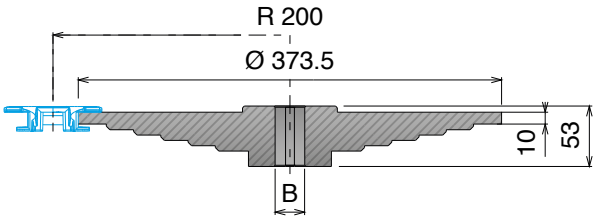

OPEN VERSION

ROUNDBORE
WITH KEYWAY

Article-Nr.	Z-	Bore
59300	34	20
59301		25
59302		30
59303		35
59304		40

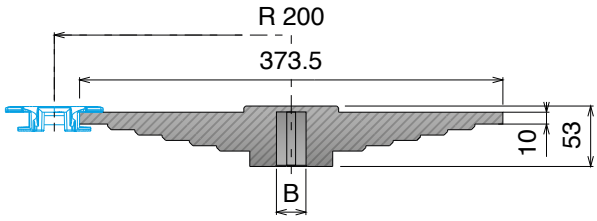

CLOSED VERSION

ROUNDBORE
WITH KEYWAY

Article-Nr.	Z-	Bore
59300C	34	20
59301C		25
59302C		30
59303C		35
59304C		40

Idler disk, machined

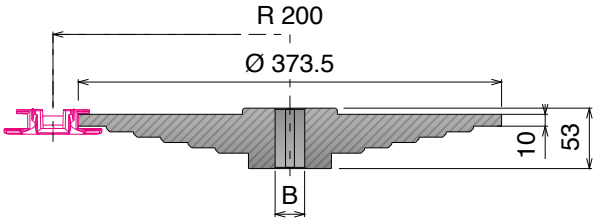

OPEN VERSION

ROUNDBORE

Article-Nr.	Z-	Bore
59361	34	20
59362		25
59363		30
59364		35
59365		40

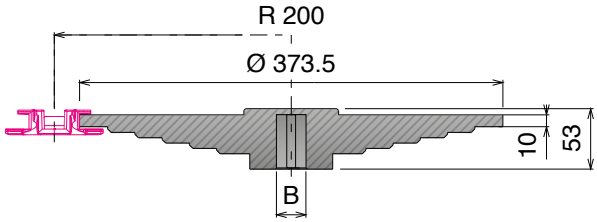

CLOSED VERSION

ROUNDBORE

Article-Nr.	Z-	Bore
59371C	34	20
59372C		25
59373C		30
59374C		35
59375C		40

NEW

878 TAB
Disco di ritorno
Turning disk / Umlenkscheibe

Suitable for 878 TAB | Bearings and oils seal included

Turning disk, machined - Carry and return side

pg. 164

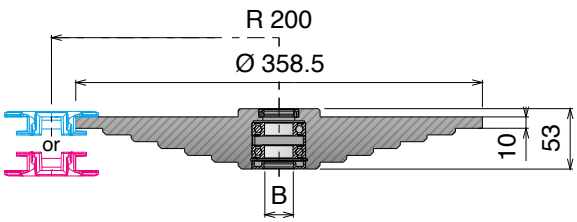

OPEN VERSION
ROUNDBORE

Article-Nr.	Bore
593510	25

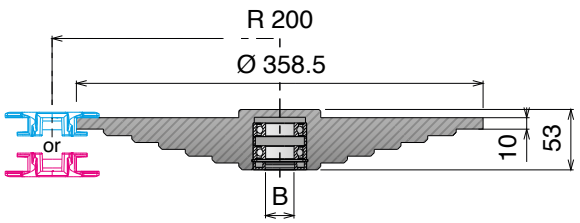

CLOSED VERSION
ROUNDBORE

Article-Nr.	Bore
59351C	25

Materiale / *Material* / *Materialien:*
Polietilene UHMW-PE
Polyethylene UHMW-PE
Polyäthylen UHMW-PE

NEW 878 TAB *Curves*

Specific for drive, idler and turning disk applications

Chain Reference | **878 TAB - K325/K450**

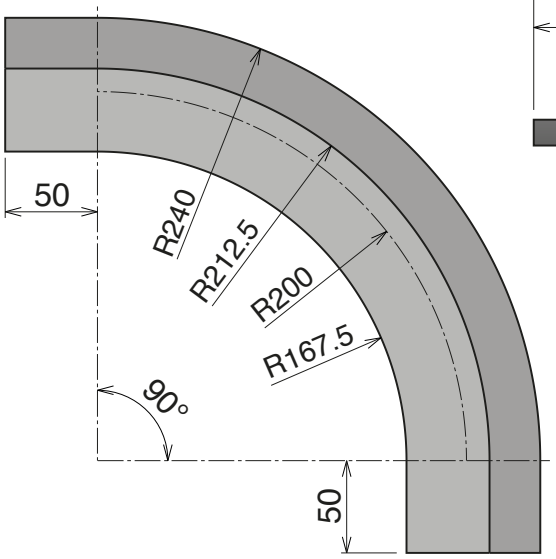

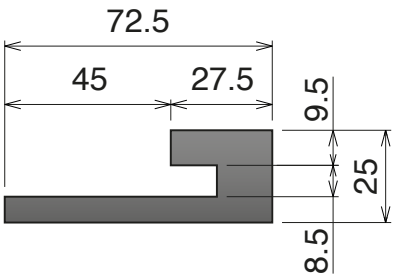

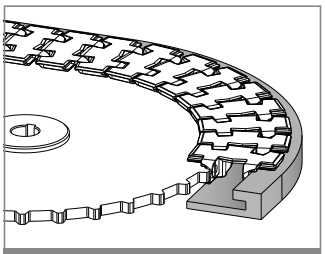
Example of application

TAB SYSTEM

Part	α 90°	α 180°	Tracks	W
K325				
764	**76411072**	**76421072**	1	72,5
K450				
764	**76411087**	**76421087**	1	87,5

NEW 1701 TAB OP-1701 TAB OPF

Disco di ritorno
Turning disk / Umlenkscheibe

Suitable for 1701 TAB OP - 1701 TAB OPF | Bearings and oils seal included

pg. 169

Turning disk, machined - Carry side

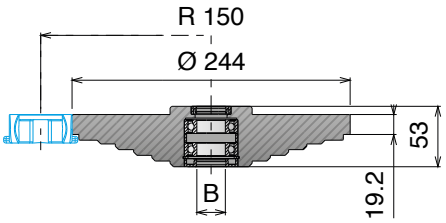

OPEN VERSION
ROUNDBORE

Article-Nr.	Bore
594010	25

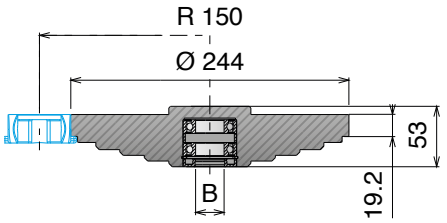

CLOSED VERSION
ROUNDBORE

Article-Nr.	Bore
59401C	25

Turning disk, machined - Return side

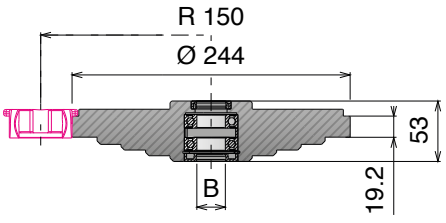

OPEN VERSION
ROUNDBORE

Article-Nr.	Bore
594210	25

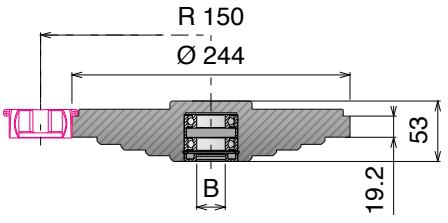

CLOSED VERSION
ROUNDBORE

Article-Nr.	Bore
59421C	25

NEW

1706-1706 TAB-765 NO GAP

Disco di ritorno
Turning disk / Umlenkscheibe

Suitable for 1706 - 1706 TAB - 765 NO GAP | Bearings and oils seal included

pg. 169

Turning disk, machined - Carry side

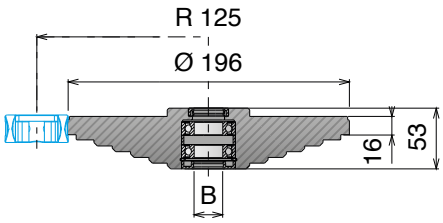

OPEN VERSION
ROUNDBORE

Article-Nr.	Bore
595010	25

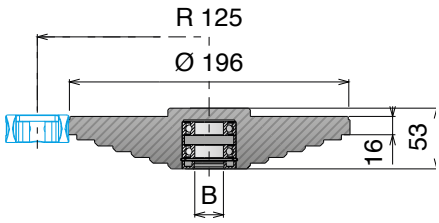

CLOSED VERSION
ROUNDBORE

Article-Nr.	Bore
59501C	25

Turning disk, machined - Return side

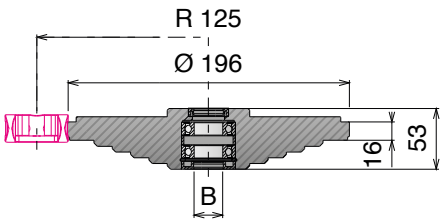

OPEN VERSION
ROUNDBORE

Article-Nr.	Bore
595210	25

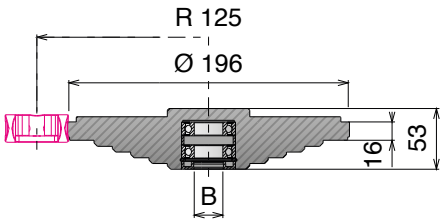

CLOSED VERSION
ROUNDBORE

Article-Nr.	Bore
59521C	25

NEW

43 MF-63 MF-83 MF-103 MF

Disco di ritorno
Turning disk / Umlenkscheibe

Suitable for 43 MF - 63 MF - 83 MF - 103 MF | Bearings included

Drive turning disk, molded - Carry side

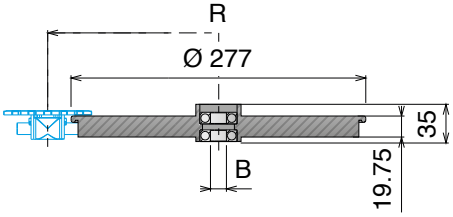

OPEN VERSION
ROUNDBORE

Article-Nr.	Bore
170000	15

R: **43 MF-63 MF** 150 **83 MF** 160 **103 MF** 170

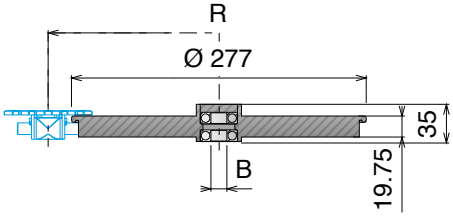

CLOSED VERSION
ROUNDBORE

Article-Nr.	Bore
170000C	15

R: **43 MF-63 MF** 150 **83 MF** 160 **103 MF** 170

Materiale / *Material* / *Materialien:*
Polietilene UHMW-PE
Polyethylene UHMW-PE
Polyäthylen UHMW-PE

NEW

83 M

Disco di ritorno
Turning disk / Umlenkscheibe

Suitable for 83 M | Bearing and screws included

Turning disk, machined - Carry and return side

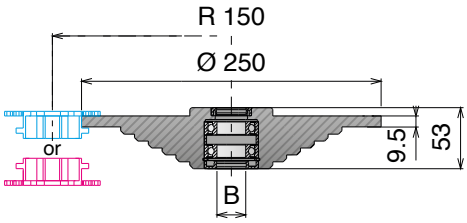

OPEN VERSION
ROUNDBORE

Article-Nr.	Bore
596010	25

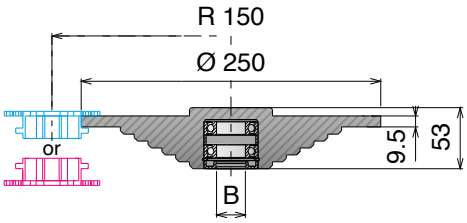

CLOSED VERSION
ROUNDBORE

Article-Nr.	Bore
59601C	25

NEW

140 M

Disco di ritorno
Turning disk / Umlenkscheibe

Suitable for 140 M | Bearing and screws included

Turning disk, machined - Carry and return side

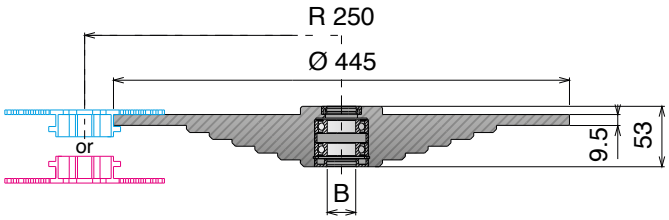

OPEN VERSION
ROUNDBORE

Article-Nr.	Bore
596210	25

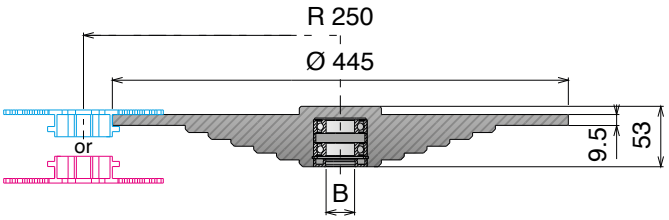

CLOSED VERSION
ROUNDBORE

Article-Nr.	Bore
59621C	25

Oadby Core product range
Oadby Available from stock in Leicester
Easy Available from stock in Italy
Standard Produced to order in Italy

Movex

107

For bore tolerance refers to Movex engineering manual available on our website.

815

Pag 108

815

Pag 108

805

Pag 109

821

Pag 109

881 TAB

Pag 110

882 M

Pag 110

Chain idler wheels

Material Info:

pg. 666

Materiale / *Material / Materialien:*
Poliammide/*Polyamide/Polyamid*
Viti: Acciaio inox/*Screws: Stainless steel/Schrauben: Edelstahl*
Dadi: ferro zincato/*Nuts: zinc plated steel/Mutter: verzinkter Stahl*
Dadi: ottone nichelato per stampate/Nuts: nickel plated brass for molded/Mutter: Messing vernickelt für gespritzt Version

815 Ruota rinvio liscia, divisa, fresata
Split idler wheel, machined / geteilte Umlenkrolle, gefräst

Delivery: Easy | Standard — Also suitable for Series 881 M - 820 - 831 - 828 - 879 M - 880 - 880 M

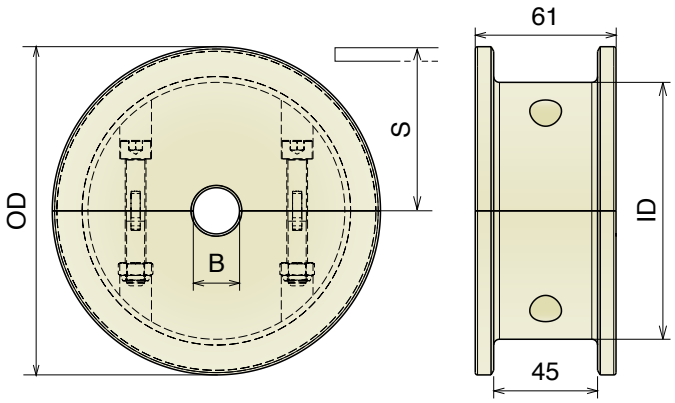

Part	Article-Nr.	ecq. Z-	Bore	OD	ID	S
601	60100	17	20	104,0	75,2	56,2
601	60101		25			
601	60102		30			
601	60103		35			
601	60104		40			
602	60200	19	20	117,0	92,2	62,6
602	60201		25			
602	60202		30			
602	60203		35			
602	60204		40			
603	60300	21	20	129,8	105,0	68,6
603	60301		25			
603	60302		30			
603	60303		35			
603	60304		40			
604	60400	23	20	142,2	111,3	74,6
604	60401		25			
604	60402		30			
604	60403		35			
604	60404		40			
605	60500	25	20	154,7	124,7	80,5
605	60501		25			
605	60502		30			
605	60503		35			
605	60504		40			
606	60600	27	20	167,2	135,0	88,5
606	60601		25			
606	60602		30			
606	60603		35			
606	60604		40			
607	60700	29	20	179,3	140,0	92,8
607	60701		25			
607	60702		30			
607	60703		35			
607	60704		40			

815 Ruota rinvio liscia, divisa, stampata
Split idler wheel, molded / geteilte Umlenkrolle, gespritzt

Delivery: Easy | Standard — Also suitable for Series 881 M - 820 - 831 - 828 - 879 M - 880 - 880 M

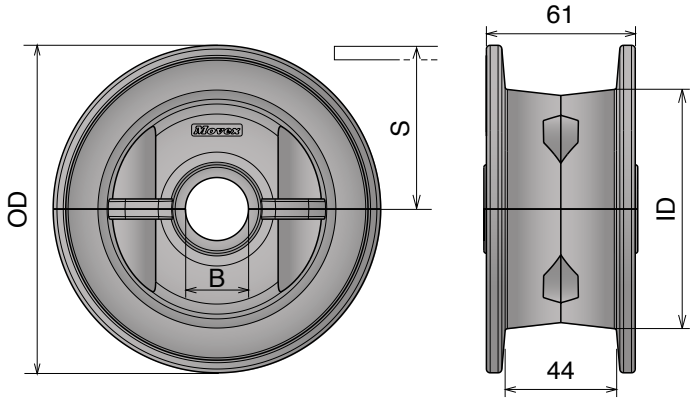

Part	Article-Nr.	ecq. Z-	Bore	OD	ID	S
608	60801	21	25	129,8	94,8	68,6
608	60802		30			
608	60803		35			
608	60804		40			
609	60901	23	25	142,2	99,3	74,6
609	60902		30			
609	60903		35			
609	60904		40			
610	61001	25	25	154,7	102,0	80,5
610	61002		30			
610	61003		35			
610	61004		40			

Oadby Core product range
Oadby Available from stock in Leicester | Easy Available from stock in Italy | Standard Produced to order in Italy

Movex

Materiale / ***Material*** / ***Materialien:***
Poliammide/*Polyamide/Polyamid*
Viti: Acciaio inox/*Screws: Stainless steel/Schrauben: Edelstahl*
Dadi: ferro zincato/*Nuts: zinc plated steel/Mutter: verzinkter Stahl*

805

Ruota rinvio liscia, divisa, fresata
Split idler wheel, machined / geteilte Umlenkrolle, gefräst

Delivery: Easy Standard

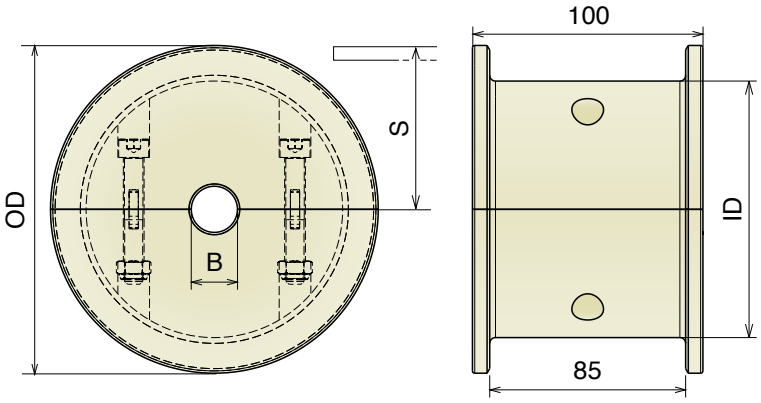

Part	Article-Nr.	ecq. Z-	Bore	OD	ID	S
611	61100	17	20	104,0	75,2	56,2
611	61101		25			
611	61102		30			
611	61103		35			
611	61104		40			
612	61200	19	20	117,0	92,2	62,6
612	61201		25			
612	61202		30			
612	61203		35			
612	61204		40			
613	61300	21	20	129,8	105,0	68,6
613	61301		25			
613	61302		30			
613	61303		35			
613	61304		40			
614	61400	23	20	142,2	111,3	74,6
614	61401		25			
614	61402		30			
614	61403		35			
614	61404		40			
615	61500	25	20	154,7	124,7	80,5
615	61501		25			
615	61502		30			
615	61503		35			
615	61504		40			
616	61600	27	20	167,2	135,0	88,5
616	61601		25			
616	61602		30			
616	61603		35			
616	61604		40			
617	61700	29	20	179,3	140,0	92,8
617	61701		25			
617	61702		30			
617	61703		35			
617	61704		40			

821

Ruota rinvio liscia, divisa, fresata
Split idler wheel, machined / geteilte Umlenkrolle, gefräst

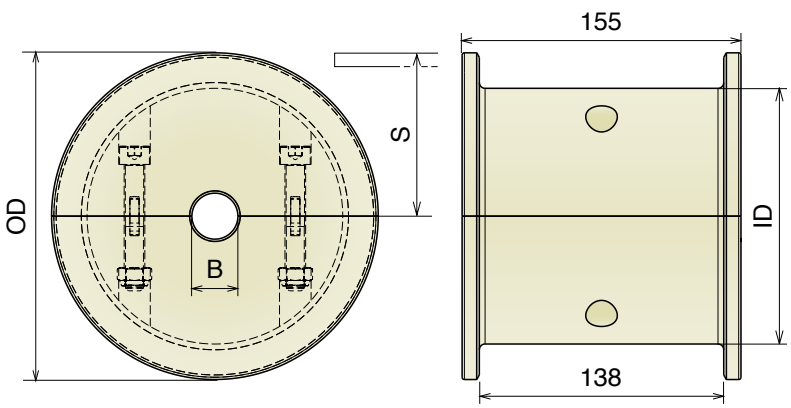

Part	Article-Nr.	ecq. Z-	Bore	OD	ID	S
625	62500	19	20	117,0	92,2	62,6
625	62501		25			
625	62502		30			
625	62503		35			
625	62504		40			
626	62600	21	20	129,8	105,0	68,6
626	62601		25			
626	62602		30			
626	62603		35			
626	62604		40			
627	62700	23	20	142,2	111,3	74,6
627	62701		25			
627	62702		30			
627	62703		35			
627	62704		40			
628	62800	25	20	154,7	124,7	80,5
628	62801		25			
628	62802		30			
628	62803		35			
628	62804		40			

881 TAB-882 M

Ruote folli per catene / *Chain idler wheels / Umlenkrollen für Scharnierbandketten*

Materiale / *Material / Materialien:*
Poliammide/*Polyamide/Polyamid*
Viti: Acciaio inox/*Screws: Stainless steel/Schrauben: Edelstahl*
Dadi: ferro zincato/*Nuts: zinc plated steel/Mutter: verzinkter Stahl*

881 TAB

Ruota rinvio liscia, divisa, fresata
Split idler wheel, machined / geteilte Umlenkrolle, gefräst

Delivery: Easy | Standard

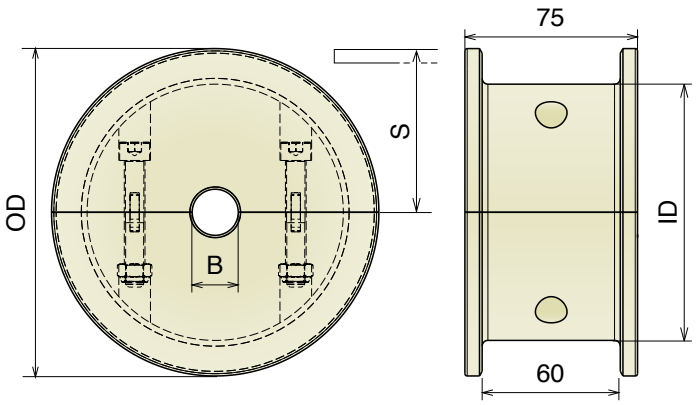

Part	Article-Nr.	ecq. Z-	Bore	OD	ID	S
618	61800	17	20	104,0	66,0	56,2
618	61801		25			
618	61802		30			
618	61803		35			
618	61804		40			
619	61900	19	20	117,0	75,0	62,6
619	61901		25			
619	61902		30			
619	61903		35			
619	61904		40			
620	62000	21	20	129,8	95,0	68,6
620	62001		25			
620	62002		30			
620	62003		35			
620	62004		40			
621	62100	23	20	142,2	108,0	74,6
621	62101		25			
621	62102		30			
621	62103		35			
621	62104		40			
622	62200	25	20	154,7	112,0	80,5
622	62201		25			
622	62202		30			
622	62203		35			
622	62204		40			
623	62300	27	20	167,2	120,0	88,5
623	62301		25			
623	62302		30			
623	62303		35			
623	62304		40			
624	62400	29	20	179,3	130,0	92,8
624	62401		25			
624	62402		30			
624	62403		35			
624	62404		40			

882 M

Ruota rinvio liscia, divisa, fresata
Split idler wheel, machined / geteilte Umlenkrolle, gefräst

Delivery: Easy | Standard | Also suitable for Series 8157 - 8257 - 8857 M - 8857 M GT

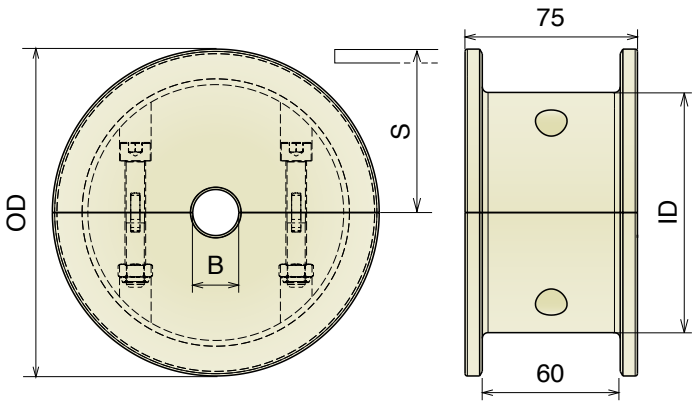

Part	Article-Nr.	ecq. Z-	Bore	OD	ID	S
629	62900	17	20	104,0	75,2	56,2
629	62901		25			
629	62902		30			
629	62903		35			
629	62904		40			
630	63000	19	20	117,0	92,2	62,6
630	63001		25			
630	63002		30			
630	63003		35			
630	63004		40			
631	63100	21	20	129,8	105,0	68,6
631	63101		25			
631	63102		30			
631	63103		35			
631	63104		40			
632	63200	23	20	142,2	111,3	74,6
632	63201		25			
632	63202		30			
632	63203		35			
632	63204		40			
633	63300	25	20	154,7	124,7	80,5
633	63301		25			
633	63302		30			
633	63303		35			
633	63304		40			
634	63400	27	20	167,2	135,0	88,5
634	63401		25			
634	63402		30			
634	63403		35			
634	63404		40			
635	63500	29	20	179,3	140,0	92,8
635	63501		25			
635	63502		30			
635	63503		35			
635	63504		40			

Oadby Core product range
Oadby Available from stock in Leicester | Easy Available from stock in Italy | Standard Produced to order in Italy

Movex

Movex® Corner tracks

MAGNETIC, TAB and BEVEL

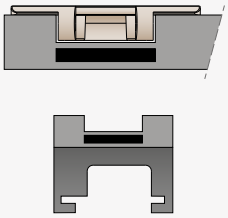

Magnetic

The magnetic corner track is the most effective and reliable system for the table top conveyor design.

The magnets are carefully selected and positioned to provide the correct magnetic field to hold the chain on the corner track and this provides a flat carrying surface for the chain; thus, improving product stability and support for the product.

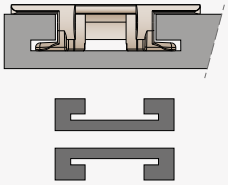

TAB

TAB type corner tracks are a more economical solution compared to magnetic curves.

In those applications where cleaning and product support are less important, they can perfectly be used.

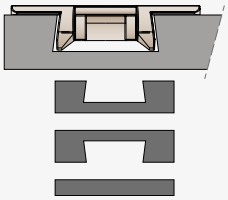

Bevel

Bevel corner tracks are another alternative to magnetic and TAB corner track solutions.

Compared with TAB system it is more accessible but an additional support in the return is required.

Standard

UHMW-PE

e.g. lubricated steel & plastic chains and belts

C Abrasive

CONDITIONS

e.g. Dry running steel chains or polluted circumstances

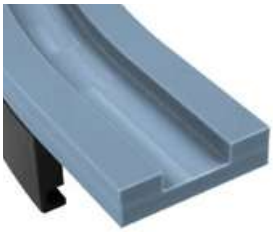

BluLub®

HIGH PERFORMANCE

e.g. Dry running plastic chains and belts & high speed application

Depending on application conditions various curve materials are suitable.

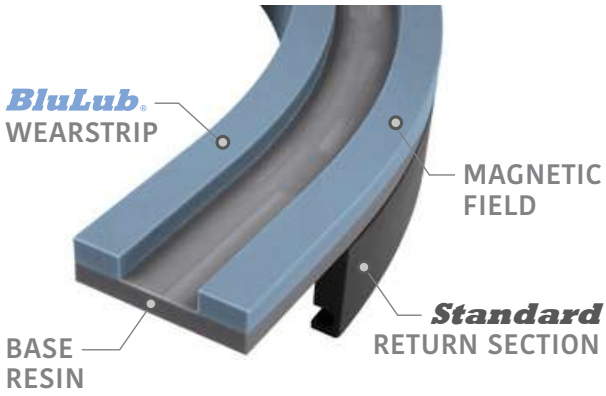

RS® Curves

SPECIFIC FOR HIGH LOAD APPLICATIONS

RS magnetic curves are designed to offer better conveyor performance.

RS curves equipped with **Blulub®** inserts require less energy consumption and reach a lower coefficient of friction which improves the product stability and elongate the wear life of chains and belts.

The curves **RS** are perfectly interchangeable with the traditional versions.

Movex RS PRO

SUPER RS MAGNETIC CURVE

PATENTED

A new concept of Magnetic curve.

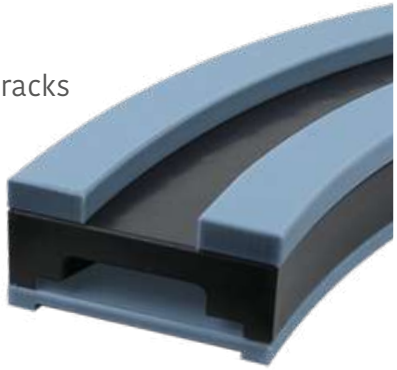

RS PRO is a patented system that consists of machined plastic curve tracks equipped with permanent magnets with a new curve return concept.

This new return section-plate provides a total support of the chain or belt in the return of the curve.

RS PRO is equipped with wear-strips in **BluLub**, which contributes to improved PV-properties and reduce the energy consumption especially in applications with limited lubrication or higher loads.

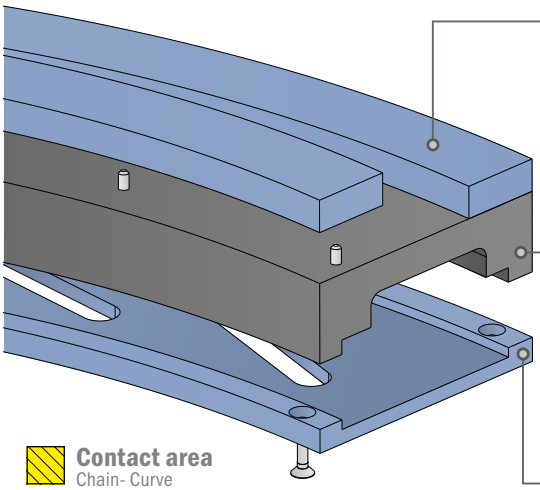

Wear strip made in BluLub

The assembly system reduces the maintenance-time in case of replacement and **BluLub** material guarantees great performance and due the lower friction which also improves the product stability and wearlife of chains and belts.

Return section made in Standard UHMW-PE

The return section of the **RS PRO** curve is designed to reduce the distance between chain and magnets; ensuring steady magnetic force and keeping the chain in the correct position.

New support plate made in BluLub

The new return-section plate creates a full support of the chain or belt in this return-section.

RS PRO patented curves can be used for **880 M** chain as well as **260 M** chain-belt.

Depending on the installation of the return-section plate, the correct space is created in the return.

Basically, two executions in one design!

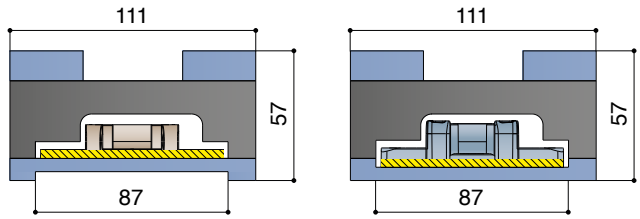

• Lower Friction • Less Wear • Easy to maintain• Lower TCO • Less Energy • Easy to install

NEW

RS CRATES

Specific for high load applications.

RS CRATES is the perfect solution for all the applications but specific abrasive conditions, able to guarantee great functionality even under high working load.

Also availble in C Abrasive Version.

Movex

113

Magnetic, Tab & Bevel corner tracks

RS PRO

Series
Pag 115

879-880-881

M6 Series
Pag 116

M7 Series
Pag 117

M10 Series
Pag 118

M4 Series
Pag 119

M1 Series
Pag 120

M5 A/C/D Series
Pag 121

M8 Series
Pag 122

M42 Series
Pag 123

M9 Series
Pag 124

M43 Series
Pag 125

M21A Series
K450 Pag 126

M22A Series
K450 Pag 127

M27 Series
K450 Pag 128

M61 Series
K750 Pag 129

M62/66/65 Series
K750 Pag 130

882-8857

M81 Series
K750 Pag 131

M85 Series
K750 Pag 132

M86 Series
K750 Pag 133

M80 Series
K750 Pag 134

882 M

M93/M94 Series
K1000 Pag 135

M97/M98 Series
K1200 Pag 136

882 LBP

MP861 Series
K750 Pag 137

MP931/MP941 Series
K1000 Pag 138

MP91 Series
K1000 Pag 139

MP971/MP981 Series
K1200 Pag 140

260 M

MB7 Series
Pag 141

MB6 Series
Pag 142

MB4 Series
Pag 143

MB8 Series
Pag 144

MB5D Series
Pag 145

MB22 Series
K450 Pag 146

MB27 Series
K450 Pag 147

261 M

MC7 Series
Pag 148

MC6 Series
Pag 149

MC4 Series
Pag 150

MC8 Series
Pag 151

MCD5 Series
Pag 152

MC22 Series
K450 Pag 153

MC27 Series
K450 Pag 154

520 M

MA7 Series
Pag 155

MA6 Series
Pag 156

MA4 Series
Pag 157

MA8 Series
Pag 158

MA42 Series
Pag 159

MA43 Series
Pag 160

MA5D Series
Pag 161

550 PRO M

Series
Pag 162

Material Info:
pg. 111

movexii.com

TAB Version

878-879-880-881-888-260-261 TAB Pag 163

878 TAB-880 TAB BO Pag 164

888 TAB Pag 165

882 TAB Pag 166

1873-1874 TAB Pag 167

1843 TAB Pag 168

1701 TAB-1706 TAB Pag 169

Bevel Version

880-881-8811 B Pag 174

Straight section

878-879-880-881-888-260-261 TAB Pag 175

882 TAB Pag 175

1873-1874 TAB Pag 176

1843 TAB Pag 176

1701 TAB-1706 TAB Pag 177

600 Series

Standard and Small radius Pag 170

Standard and Small radius - TAB Version Pag 171

Heavy duty and Heavy duty/Small radius Pag 172

With Bearings Pag 173

Movex®

RS PRO

PATENTED

Chain Reference	879 M - K325	880 M - K325	880 M - K330	881 M - K325	881 M - K330	260 M - K330	Delivery:	Easy	Standard

Curva Larghezza Base = 111 mm
Curve Basic Width = 111 mm
Kurve Basisbreite = 111 mm

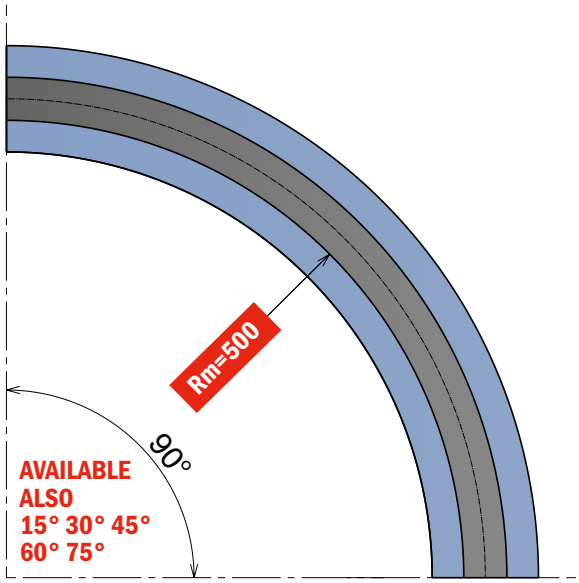

IN & OUT
AVAILABLE ALSO
125 mm - 100 mm - 50 mm

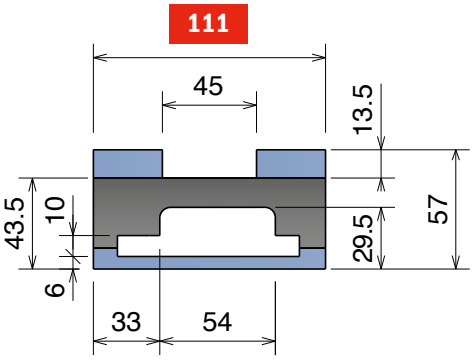

SINGLE TRACK for 260 M

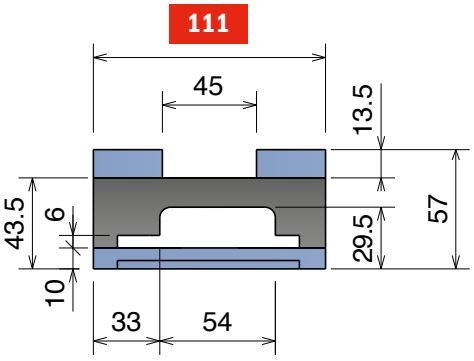

SINGLE TRACK for 880 M

Available in
BluLub®

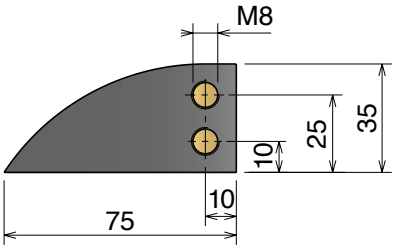

MAGNETIC SYSTEM

Part	Article-Nr.	Tracks	W	Material
712	71211610RSPRO	1	111	

RS PRO CURVE

On request available
with different radius.

RS PRO
ONE curve, FOUR chains!

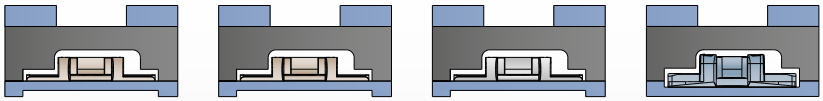

879 M | 880 M | 881 M | 260 M

Materiale / *Material / Materialien:*
Polietilene UHMW-PE
Polyethylene UHMW-PE
Polyäthylen UHMW-PE

879-880-881 *M6 Series*

Chain Reference	879 M - K325	880 M - K325	880 M - K330	881 M - K325	881 M - K330	Delivery:	Easy	Standard

Curva Larghezza Base = 100 mm; Passo = 85 mm
Curve Basic Width = 100 mm; Pitch = 85 mm
Kurve Basisbreite = 100 mm; Teilung = 85 mm

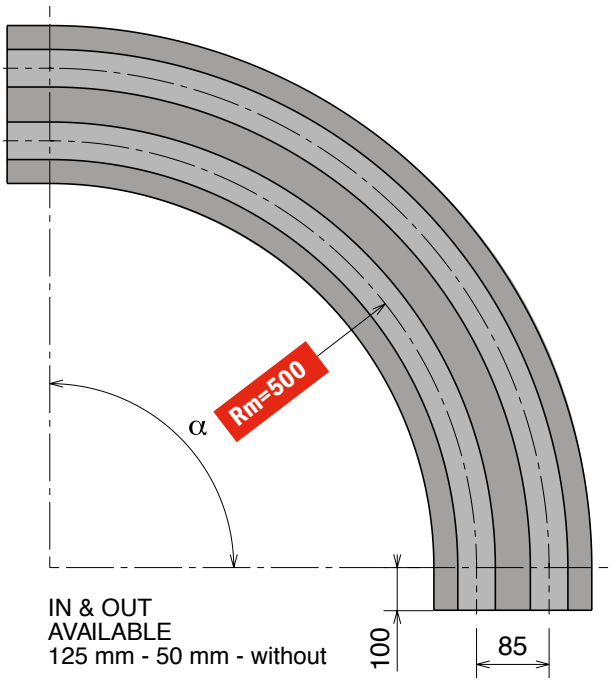

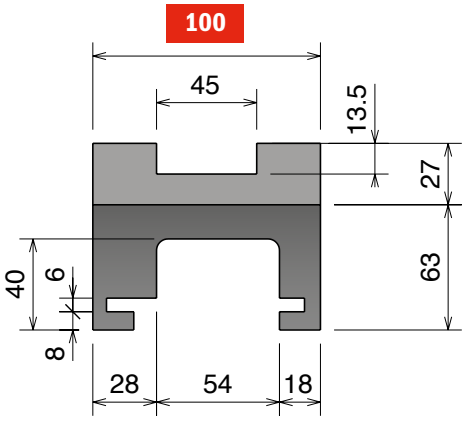

SINGLE TRACK

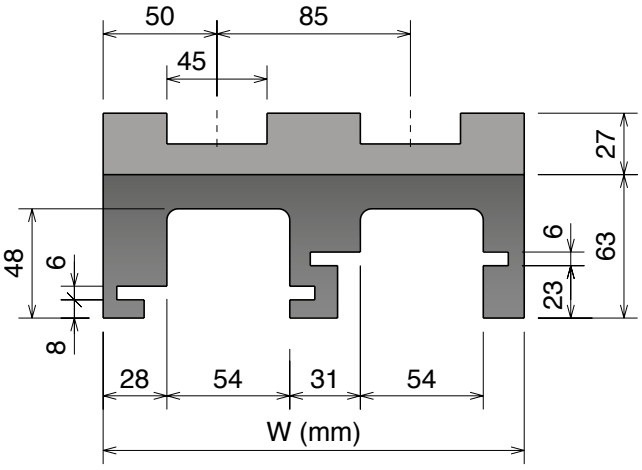

MULTI TRACK

Available in
BluLub®

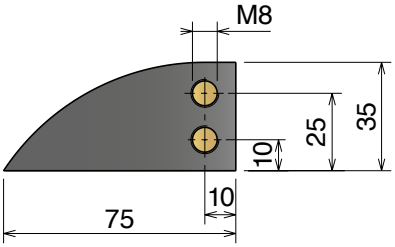

MAGNETIC SYSTEM

Upper part available, on request, also in BluLub® and for abrasive applications.

Part	α 15°	α 30°	α 45°	α 60°	α 75°	α 90°	Tracks	W	Material
701	70111114	70111214	70111314	70111414	70111514	70111614	1	100	
701	70111124	70111224	70111324	70111424	70111524	70111624	2	185	
701	70111134	70111234	70111334	70111434	70111534	70111634	3	270	
701	70111144	70111244	70111344	70111444	70111544	70111644	4	355	
701	70111154	70111254	70111354	70111454	70111554	70111654	5	440	
701	70111164	70111264	70111364	70111464	70111564	70111664	6	525	
701	70111174	70111274	70111374	70111474	70111574	70111674	7	610	
701	70111184	70111284	70111384	70111484	70111584	70111684	8	695	

Standard codes on table

add "**B**" for BluLub®

add "**C**" for abrasive

Part	α 15°	α 30°	α 45°	α 60°	α 75°	α 90°	Tracks	W	Material
701	70111114RS	70111214RS	70111314RS	70111414RS	70111514RS	70111614RS	1	100	
701	70111124RS	70111224RS	70111324RS	70111424RS	70111524RS	70111624RS	2	185	
701	70111134RS	70111234RS	70111334RS	70111434RS	70111534RS	70111634RS	3	270	
701	70111144RS	70111244RS	70111344RS	70111444RS	70111544RS	70111644RS	4	355	
701	70111154RS	70111254RS	70111354RS	70111454RS	70111554RS	70111654RS	5	440	
701	70111164RS	70111264RS	70111364RS	70111464RS	70111564RS	70111664RS	6	525	
701	70111174RS	70111274RS	70111374RS	70111474RS	70111574RS	70111674RS	7	610	
701	70111184RS	70111284RS	70111384RS	70111484RS	70111584RS	70111684RS	8	695	

RS
add "**RS**" for RS-version

Oadby Core product range
Oadby Available from stock in Leicester
Easy Available from stock in Italy
Standard Produced to order in Italy

Movex®

879-880-881 *M7 Series*

Chain Reference	879 M - K325	880 M - K325	880 M - K330	881 M - K325	881 M - K330

Curva Larghezza Base = 100 mm; Passo = 85 mm
Curve Basic Width = 100 mm; Pitch = 85 mm
Kurve Basisbreite = 100 mm; Teilung = 85 mm

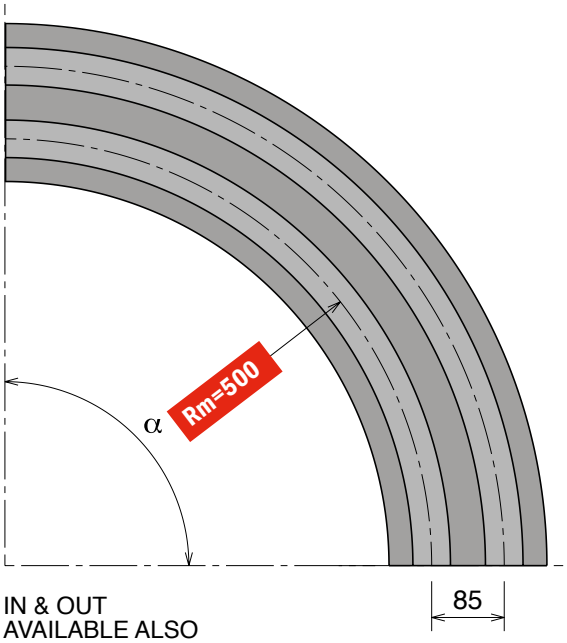

IN & OUT
AVAILABLE ALSO
125 mm - 100 mm - 50 mm

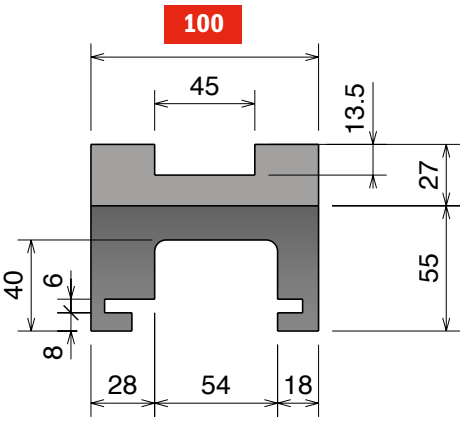

SINGLE TRACK

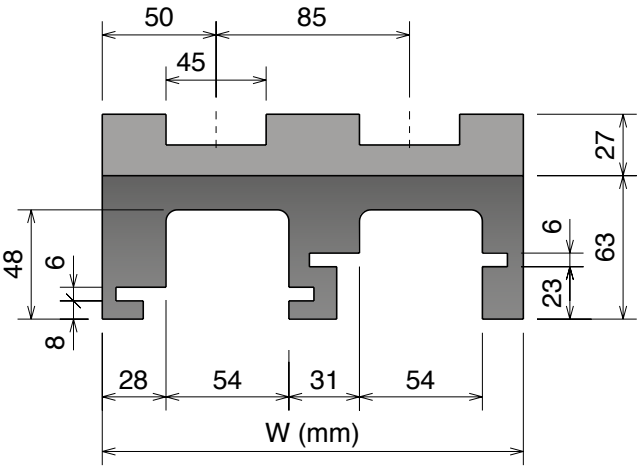

MULTI TRACK

Available in
BluLub®

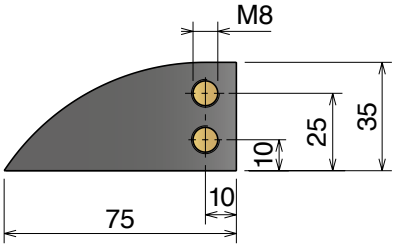

MAGNETIC SYSTEM

Upper part available, on request, also in BluLub® and for abrasive applications.

Part	α 15°	α 30°	α 45°	α 60°	α 75°	α 90°	Tracks	W
701	70111110	70111210	70111310	70111410	70111510	70111610	1	100
701	70111120	70111220	70111320	70111420	70111520	70111620	2	185
701	70111130	70111230	70111330	70111430	70111530	70111630	3	270
701	70111140	70111240	70111340	70111440	70111540	70111640	4	355
701	70111150	70111250	70111350	70111450	70111550	70111650	5	440
701	70111160	70111260	70111360	70111460	70111560	70111660	6	525
701	70111170	70111270	70111370	70111470	70111570	70111670	7	610
701	70111180	70111280	70111380	70111480	70111580	70111680	8	695

Material

Standard codes on table

add "**B**" for BluLub®

add "**C**" for abrasive

Part	α 15°	α 30°	α 45°	α 60°	α 75°	α 90°	Tracks	W
701	70111110RS	70111210RS	70111310RS	70111410RS	70111510RS	70111610RS	1	100
701	70111120RS	70111220RS	70111320RS	70111420RS	70111520RS	70111620RS	2	185
701	70111130RS	70111230RS	70111330RS	70111430RS	70111530RS	70111630RS	3	270
701	70111140RS	70111240RS	70111340RS	70111440RS	70111540RS	70111640RS	4	355
701	70111150RS	70111250RS	70111350RS	70111450RS	70111550RS	70111650RS	5	440
701	70111160RS	70111260RS	70111360RS	70111460RS	70111560RS	70111660RS	6	525
701	70111170RS	70111270RS	70111370RS	70111470RS	70111570RS	70111670RS	7	610
701	70111180RS	70111280RS	70111380RS	70111480RS	70111580RS	70111680RS	8	695

Material

RS add "**RS**" for RS-version

Materiale / *Material / Materialien:*
Polietilene UHMW-PE
Polyethylene UHMW-PE
Polyäthylen UHMW-PE

879-880-881 *M10 Series*

Chain Reference	879 M - K325	880 M - K325	880 M - K330	881 M - K325	881 M - K330

Curva Larghezza Base = 110 mm; Passo = 85 mm
Curve Basic Width = 110 mm; Pitch = 85 mm
Kurve Basisbreite = 110 mm; Teilung = 85 mm

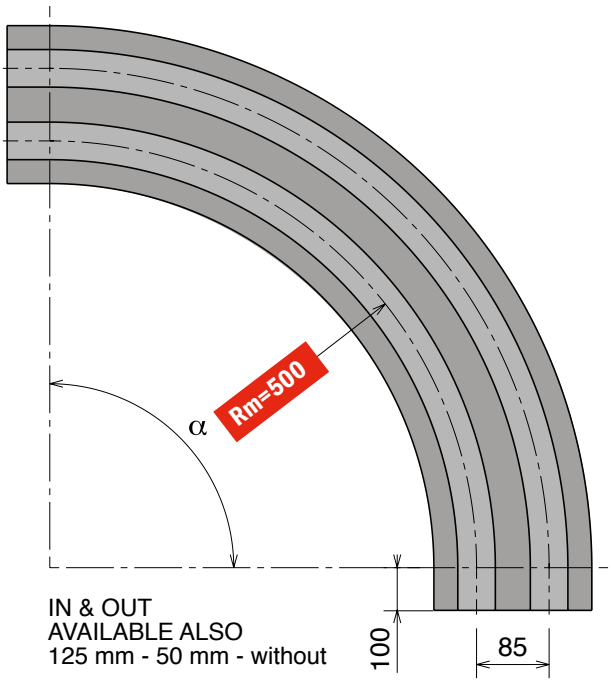

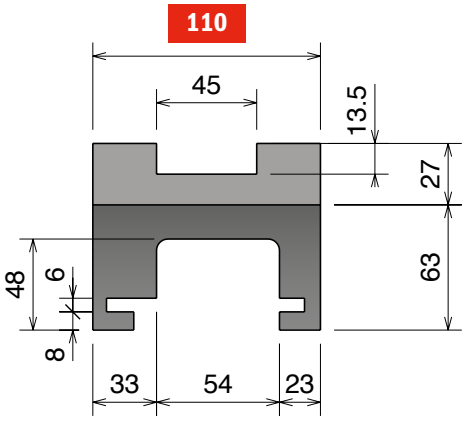

SINGLE TRACK

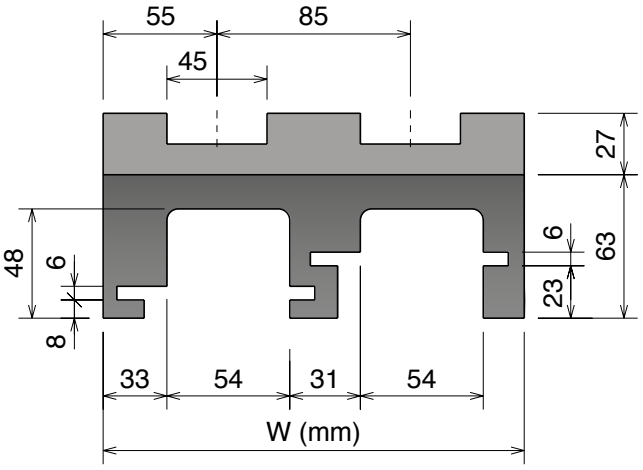

MULTI TRACK

Available in
BluLub®

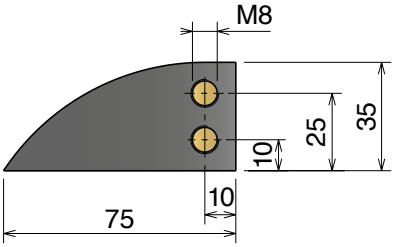

MAGNETIC SYSTEM

Upper part available, on request, also in BluLub® and for abrasive applications.

Part	α 15°	α 30°	α 45°	α 60°	α 75°	α 90°	Tracks	W
711	71111114	71111214	71111314	71111414	71111514	71111614	1	110
711	71111124	71111224	71111324	71111424	71111524	71111624	2	195
711	71111134	71111234	71111334	71111434	71111534	71111634	3	280
711	71111144	71111244	71111344	71111444	71111544	71111644	4	365
711	71111154	71111254	71111354	71111454	71111554	71111654	5	450
711	71111164	71111264	71111364	71111464	71111564	71111664	6	535
711	71111174	71111274	71111374	71111474	71111574	71111674	7	620
711	71111184	71111284	71111384	71111484	71111584	71111684	8	705

Standard codes on table

add "**B**" for BluLub®

add "**C**" for abrasive

Part	α 15°	α 30°	α 45°	α 60°	α 75°	α 90°	Tracks	W
711	71111114RS	71111214RS	71111314RS	71111414RS	71111514RS	71111614RS	1	110
711	71111124RS	71111224RS	71111324RS	71111424RS	71111524RS	71111624RS	2	195
711	71111134RS	71111234RS	71111334RS	71111434RS	71111534RS	71111634RS	3	280
711	71111144RS	71111244RS	71111344RS	71111444RS	71111544RS	71111644RS	4	365
711	71111154RS	71111254RS	71111354RS	71111454RS	71111554RS	71111654RS	5	450
711	71111164RS	71111264RS	71111364RS	71111464RS	71111564RS	71111664RS	6	535
711	71111174RS	71111274RS	71111374RS	71111474RS	71111574RS	71111674RS	7	620
711	71111184RS	71111284RS	71111384RS	71111484RS	71111584RS	71111684RS	8	705

RS
add "**RS**" for RS-version

Oadby Core product range
Oadby Available from stock in Leicester
Easy Available from stock in Italy
Standard Produced to order in Italy

Movex®

879-880-881 *M4 Series*

Chain Reference	879 M - K325	880 M - K325	880 M - K330	881 M - K325	881 M - K330

Curva Larghezza Base = 111 mm; Passo = 85 mm
Curve Basic Width = 111 mm; Pitch = 85 mm
Kurve Basisbreite = 111 mm; Teilung = 85 mm

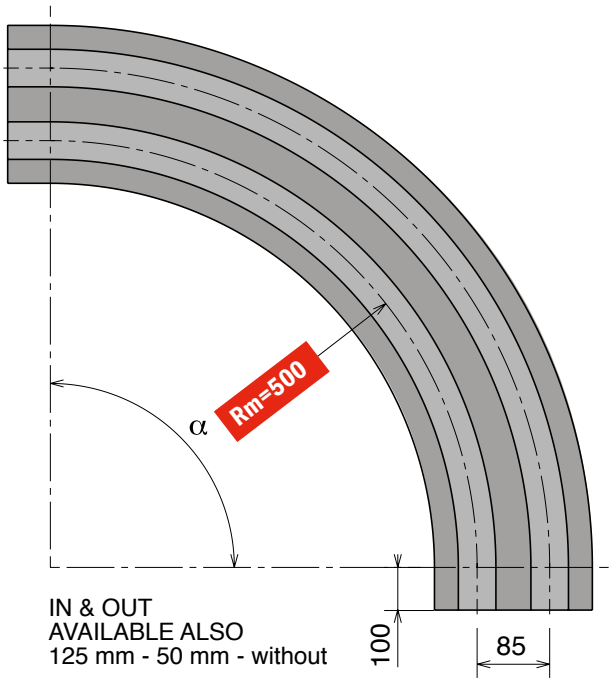

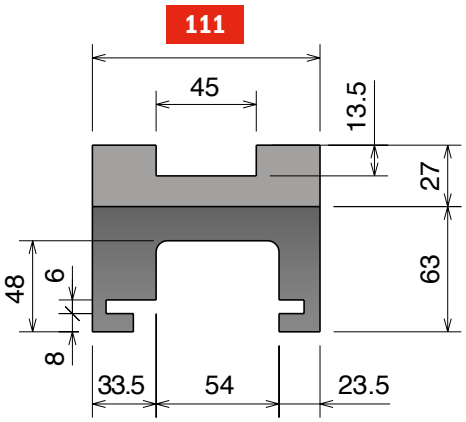

SINGLE TRACK

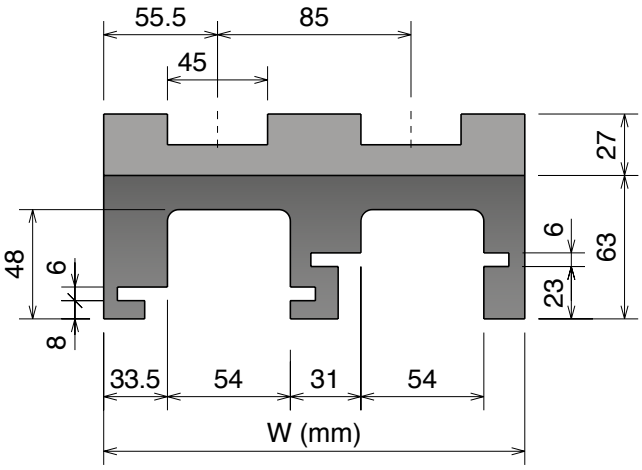

MULTI TRACK

Available in
BluLub®

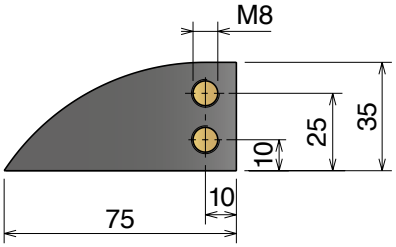

MAGNETIC SYSTEM

Upper part available, on request, also in BluLub® and for abrasive applications.

Part	α 15°	α 30°	α 45°	α 60°	α 75°	α 90°	Tracks	W	Material
712	71211114	71211214	71211314	71211414	71211514	71211614	1	111	
712	71211124	71211224	71211324	71211424	71211524	71211624	2	196	
712	71211134	71211234	71211334	71211434	71211534	71211634	3	281	
712	71211144	71211244	71211344	71211444	71211544	71211644	4	366	
712	71211154	71211254	71211354	71211454	71211554	71211654	5	451	
712	71211164	71211264	71211364	71211464	71211564	71211664	6	536	
712	71211174	71211274	71211374	71211474	71211574	71211674	7	621	
712	71211184	71211284	71211384	71211484	71211584	71211684	8	706	

Standard codes on table

add "**B**" for BluLub®

add "**C**" for abrasive

Part	α 15°	α 30°	α 45°	α 60°	α 75°	α 90°	Tracks	W	Material
712	71211114RS	71211214RS	71211314RS	71211414RS	71211514RS	71211614RS	1	111	
712	71211124RS	71211224RS	71211324RS	71211424RS	71211524RS	71211624RS	2	196	
712	71211134RS	71211234RS	71211334RS	71211434RS	71211534RS	71211634RS	3	281	
712	71211144RS	71211244RS	71211344RS	71211444RS	71211544RS	71211644RS	4	366	
712	71211154RS	71211254RS	71211354RS	71211454RS	71211554RS	71211654RS	5	451	
712	71211164RS	71211264RS	71211364RS	71211464RS	71211564RS	71211664RS	6	536	
712	71211174RS	71211274RS	71211374RS	71211474RS	71211574RS	71211674RS	7	621	
712	71211184RS	71211284RS	71211384RS	71211484RS	71211584RS	71211684RS	8	706	

RS
add "**RS**" for RS-version

Materiale / Material / Materialien:
Polietilene UHMW-PE
Polyethylene UHMW-PE
Polyäthylen UHMW-PE

879-880-881 M1 Series

Chain Reference	879 M - K325	880 M - K325	880 M - K330	881 M - K325	881 M - K330

Curva Larghezza Base = 100 mm; Passo = 89 mm
Curve Basic Width = 100 mm; Pitch = 89 mm
Kurve Basisbreite = 100 mm; Teilung = 89 mm

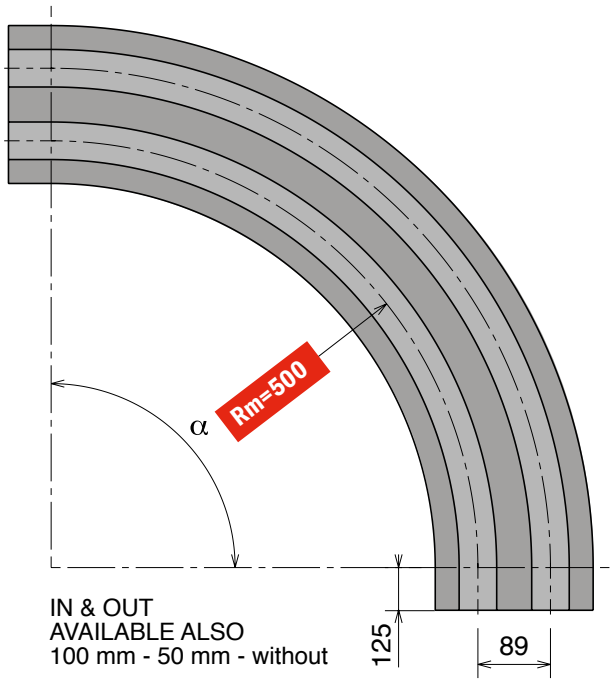

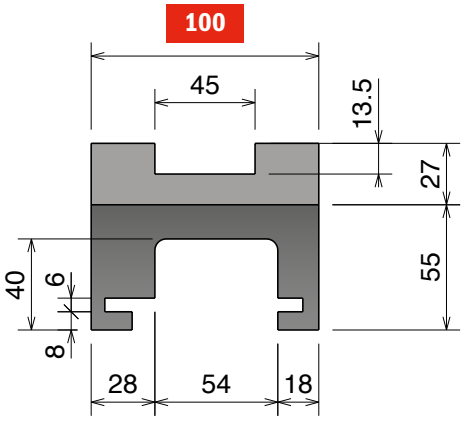

SINGLE TRACK

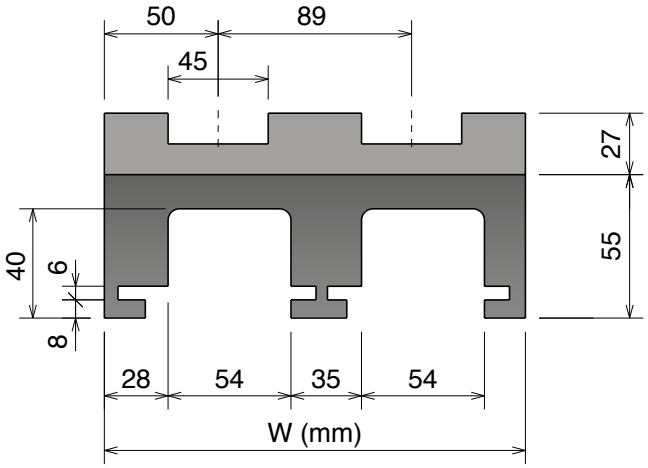

MULTI TRACK

Available in
BluLub®

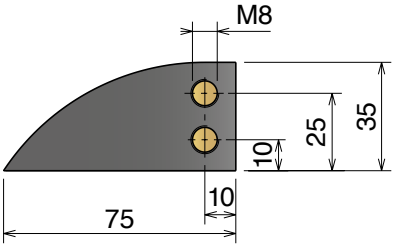

MAGNETIC SYSTEM

Upper part available, on request, also in BluLub® and for abrasive applications.

Part	α 15°	α 30°	α 45°	α 60°	α 75°	α 90°	Tracks	W	Material
730	73011115	73011215	73011315	73011415	73011515	73011615	1	100	
730	73011125	73011225	73011325	73011425	73011525	73011625	2	189	
730	73011135	73011235	73011335	73011435	73011535	73011635	3	278	
730	73011145	73011245	73011345	73011445	73011545	73011645	4	367	
730	73011155	73011255	73011355	73011455	73011555	73011655	5	456	
730	73011165	73011265	73011365	73011465	73011565	73011665	6	545	
730	73011175	73011275	73011375	73011475	73011575	73011675	7	634	
730	73011185	73011285	73011385	73011485	73011585	73011685	8	723	

Standard codes on table

add "**B**" for BluLub®

add "**C**" for abrasive

Part	α 15°	α 30°	α 45°	α 60°	α 75°	α 90°	Tracks	W	Material
730	73011115RS	73011215RS	73011315RS	73011415RS	73011515RS	73011615RS	1	100	
730	73011125RS	73011225RS	73011325RS	73011425RS	73011525RS	73011625RS	2	189	
730	73011135RS	73011235RS	73011335RS	73011435RS	73011535RS	73011635RS	3	278	
730	73011145RS	73011245RS	73011345RS	73011445RS	73011545RS	73011645RS	4	367	
730	73011155RS	73011255RS	73011355RS	73011455RS	73011555RS	73011655RS	5	456	
730	73011165RS	73011265RS	73011365RS	73011465RS	73011565RS	73011665RS	6	545	
730	73011175RS	73011275RS	73011375RS	73011475RS	73011575RS	73011675RS	7	634	
730	73011185RS	73011285RS	73011385RS	73011485RS	73011585RS	73011685RS	8	723	

RS
add "**RS**" for RS-version

Oadby Core product range
Oadby Available from stock in Leicester
Easy Available from stock in Italy
Standard Produced to order in Italy

Movex®

879-880-881 *M5 A/C/D Series*

Chain Reference	879 M - K325	880 M - K325	880 M - K330	881 M - K325	881 M - K330

Curva Larghezza Base = 100 mm
Curve Basic Width = 100 mm
Kurve Basisbreite = 100 mm

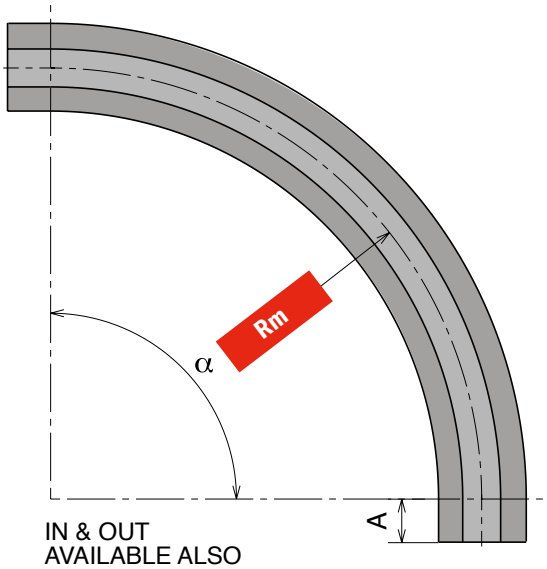

IN & OUT
AVAILABLE ALSO
100 mm - 50 mm - without

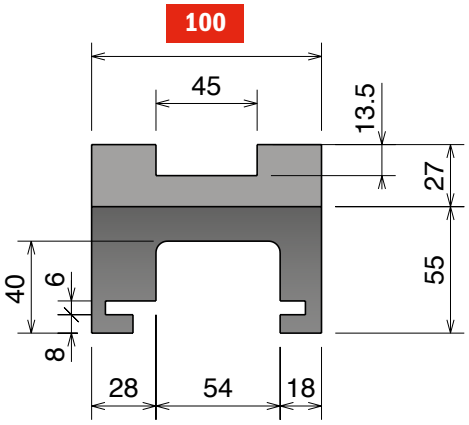

Available in
BluLub®

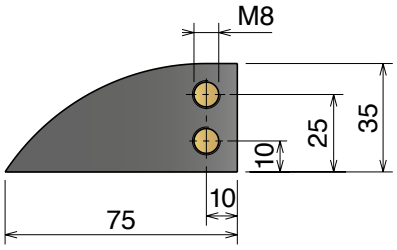

Upper part available, on request, also in BluLub® and for abrasive applications.

MAGNETIC SYSTEM

M5A Series - Rm 680

Part	α 15°	α 30°	α 45°	α 60°	α 75°	α 90°		Tracks	W	A
703	70315114	70315214	70315314	70315414	70315514	70315614		1	100	100

Material — **Standard** codes on table — add "**B**" for BluLub® — add "**C**" for abrasive — add "**RS**" for RS-version

M5C Series - Rm 860

Part	α 15°	α 30°	α 45°	α 60°	α 75°	α 90°		Tracks	W	A
703	70318115	70318215	70318315	70318415	70318515	70318615		1	100	125

Material — **Standard** codes on table — add "**B**" for BluLub® — add "**C**" for abrasive — add "**RS**" for RS-version

M5D Series - Rm 1000

Part	α 15°	α 30°	α 45°	α 60°	α 75°	α 90°		Tracks	W	A
703	70319110	70319210	70319310	70319410	70319510	70319610		1	100	0

Material — **Standard** codes on table — add "**B**" for BluLub® — add "**C**" for abrasive — add "**RS**" for RS-version

Materiale / Material / Materialien:
Polietilene UHMW-PE
Polyethylene UHMW-PE
Polyäthylen UHMW-PE

879-880-881 M8 Series

Chain Reference	879 M - K325	880 M - K325	880 M - K330	881 M - K325	881 M - K330

Curva Larghezza Base = 100 mm; Passo = 85 mm
Curve Basic Width = 100 mm; Pitch = 85 mm
Kurve Basisbreite = 100 mm; Teilung = 85 mm

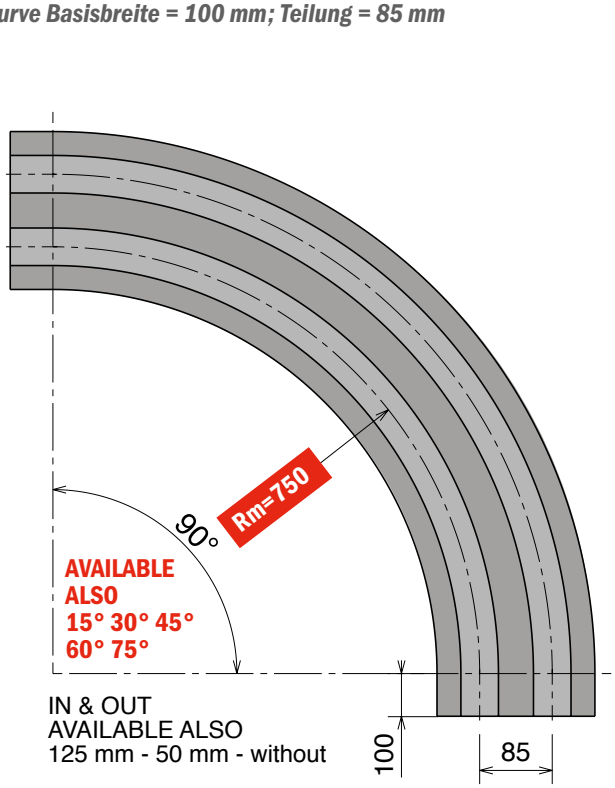

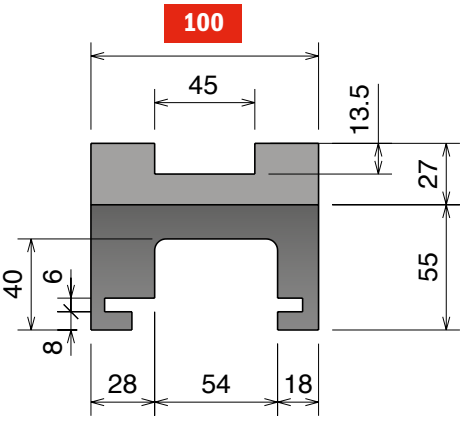

SINGLE TRACK

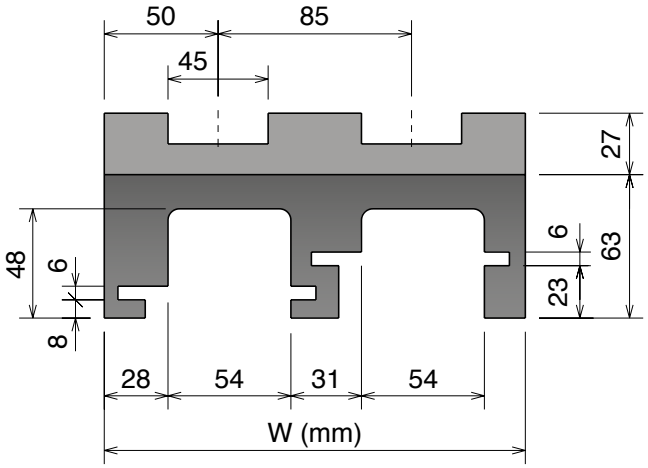

MULTI TRACK

Available in
BluLub®

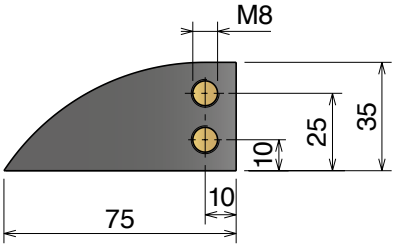

MAGNETIC SYSTEM

Upper part available, on request, also in BluLub® and for abrasive applications.

Part	Article-Nr.	Tracks	W
702	70216614	1	100
702	70216624	2	185
702	70216634	3	270
702	70216644	4	355
702	70216654	5	440
702	70216664	6	525
702	70216674	7	610
702	70216684	8	695

Standard codes on table

add "**B**" for BluLub®

add "**C**" for abrasive

Part	Article-Nr.	Tracks	W
702	70216614RS	1	100
702	70216624RS	2	185
702	70216634RS	3	270
702	70216644RS	4	355
702	70216654RS	5	440
702	70216664RS	6	525
702	70216674RS	7	610
702	70216684RS	8	695

RS
add "**RS**" for RS-version

Oadby Core product range
Oadby Available from stock in Leicester
Easy Available from stock in Italy
Standard Produced to order in Italy

Movex®

879-880-881 *M42 Series*

Chain Reference	879 M - K325	880 M - K325	880 M - K330	881 M - K325	881 M - K330

Curva Larghezza Base = 111 mm; Passo = 85 mm
Curve Basic Width = 111 mm; Pitch = 85 mm
Kurve Basisbreite = 111 mm; Teilung = 85 mm

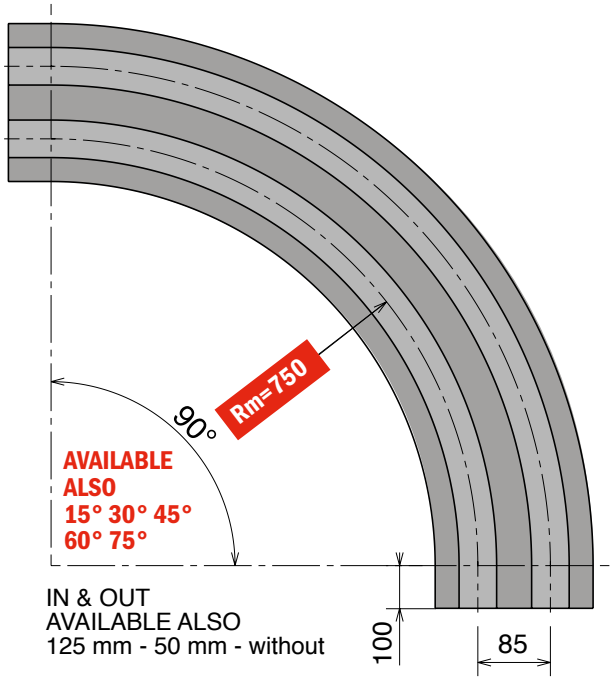

Available in
BluLub®

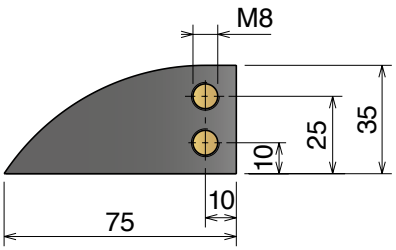

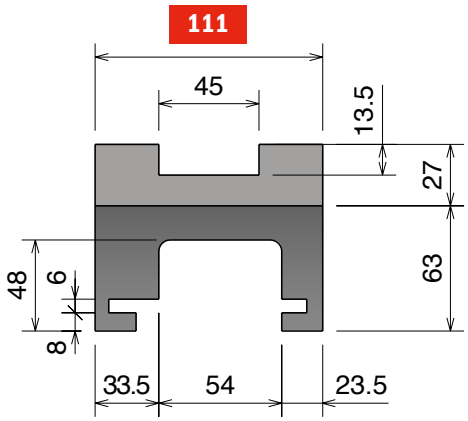

SINGLE TRACK

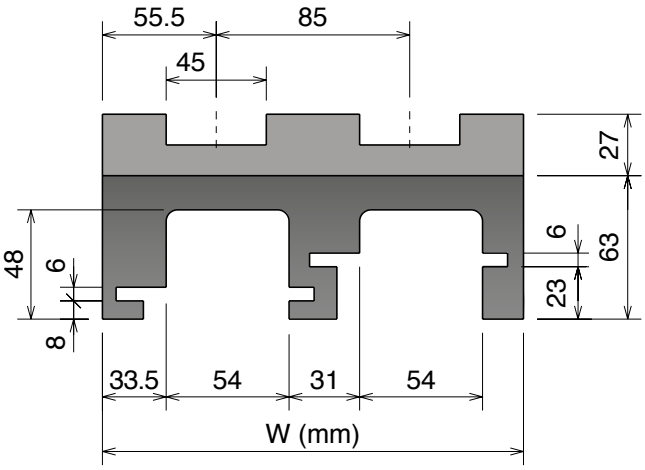

MULTI TRACK

MAGNETIC SYSTEM

Upper part available, on request, also in BluLub® and for abrasive applications.

Part	Article-Nr.	Tracks	W	Material
713	**71316614**	1	111	
713	**71316624**	2	196	
713	**71316634**	3	281	
713	**71316644**	4	366	
713	**71316654**	5	451	
713	**71316664**	6	536	
713	**71316674**	7	621	
713	**71316684**	8	706	

Standard codes on table

add "**B**" for BluLub®

add "**C**" for abrasive

Part	Article-Nr.	Tracks	W	Material
713	**71316614RS**	1	111	
713	**71316624RS**	2	196	
713	**71316634RS**	3	281	
713	**71316644RS**	4	366	
713	**71316654RS**	5	451	
713	**71316664RS**	6	536	
713	**71316674RS**	7	621	
713	**71316684RS**	8	706	

RS
add "**RS**" for RS-version

Materiale / *Material / Materialien:*
Polietilene UHMW-PE
Polyethylene UHMW-PE
Polyäthylen UHMW-PE

879-880-881 *M9 Series*

Chain Reference	879 M - K325	880 M - K325	880 M - K330	881 M - K325	881 M - K330

Curva Larghezza Base = 110 mm; Passo = 90 mm
Curve Basic Width = 110 mm; Pitch = 90 mm
Kurve Basisbreite = 110 mm; Teilung = 90 mm

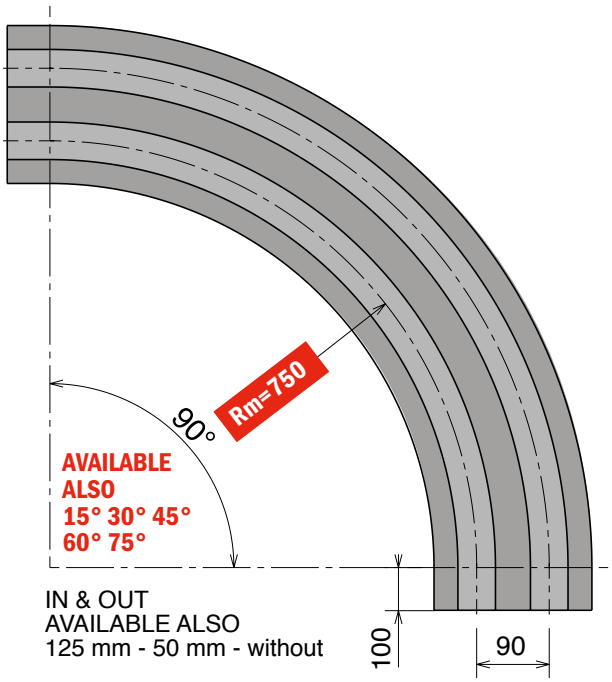

Available in BluLub®

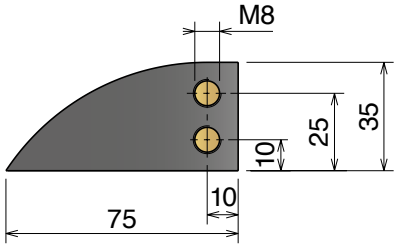

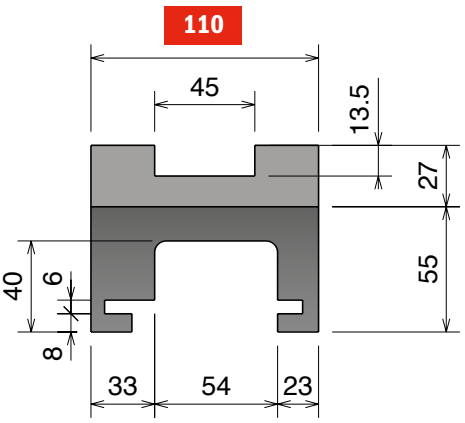

SINGLE TRACK

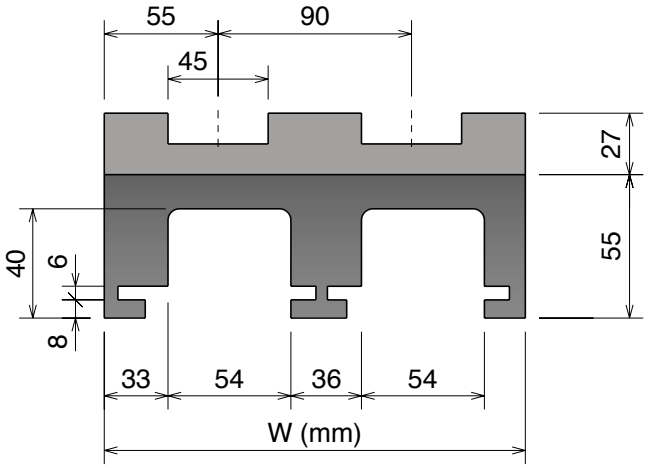

MULTI TRACK

MAGNETIC SYSTEM

Upper part available, on request, also in BluLub® and for abrasive applications.

Part	Article-Nr.	Tracks	W
714	71416614	1	110
714	71416624	2	200
714	71416634	3	290
714	71416644	4	380
714	71416654	5	470
714	71416664	6	560
714	71416674	7	650
714	71416684	8	740

Standard codes on table

add "**B**" for BluLub®

add "**C**" for abrasive

Part	Article-Nr.	Tracks	W
714	71416614RS	1	110
714	71416624RS	2	200
714	71416634RS	3	290
714	71416644RS	4	380
714	71416654RS	5	470
714	71416664RS	6	560
714	71416674RS	7	650
714	71416684RS	8	740

RS
add "**RS**" for RS-version

Oadby Core product range
Oadby Available from stock in Leicester
Easy Available from stock in Italy
Standard Produced to order in Italy

Movex®

879-880-881 *M43 Series*

Chain Reference	879 M - K325	880 M - K325	880 M - K330	881 M - K325	881 M - K330	Delivery:	Easy	Standard

Curva Larghezza Base = 111 mm; Passo = 85 mm
Curve Basic Width = 111 mm; Pitch = 85 mm
Kurve Basisbreite = 111 mm; Teilung = 85 mm

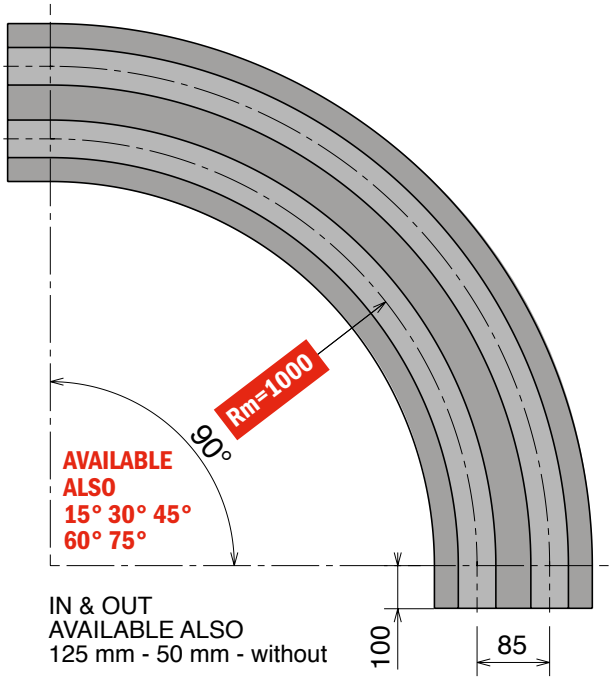

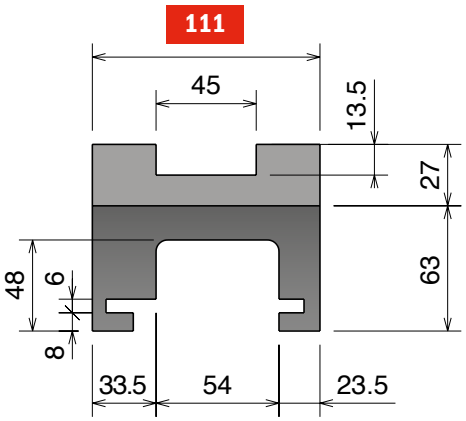

SINGLE TRACK

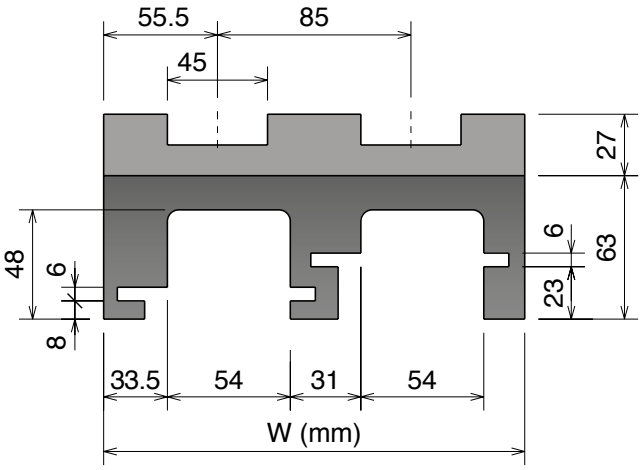

MULTI TRACK

Available in
BluLub®

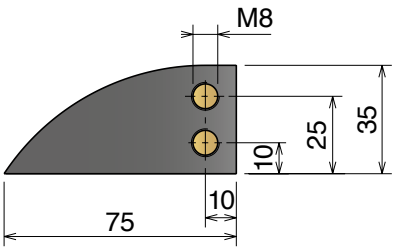

MAGNETIC SYSTEM

Upper part available, on request, also in BluLub® and for abrasive applications.

Part	Article-Nr.	Tracks	W	Material
712	**71219614**	1	111	
712	**71219624**	2	196	
712	**71219634**	3	281	
712	**71219644**	4	366	
712	**71219654**	5	451	
712	**71219664**	6	536	
712	**71219674**	7	621	
712	**71219684**	8	706	

Standard codes on table

add "**B**" for BluLub®

add "**C**" for abrasive

Part	Article-Nr.	Tracks	W	Material
712	**71219614RS**	1	111	
712	**71219624RS**	2	196	
712	**71219634RS**	3	281	
712	**71219644RS**	4	366	
712	**71219654RS**	5	451	
712	**71219664RS**	6	536	
712	**71219674RS**	7	621	
712	**71219684RS**	8	706	

RS
add "**RS**" for RS-version

Materiale / *Material / Materialien:*
Polietilene UHMW-PE
Polyethylene UHMW-PE
Polyäthylen UHMW-PE

879-880-881 K450 *M21A Series*

Chain Reference	879 M - K450	880 M - K450	881 M - K450

Curva Larghezza Base = 129 mm; Passo = 120 mm
Curve Basic Width = 129 mm; Pitch = 120 mm
Kurve Basisbreite = 129 mm; Teilung = 120 mm

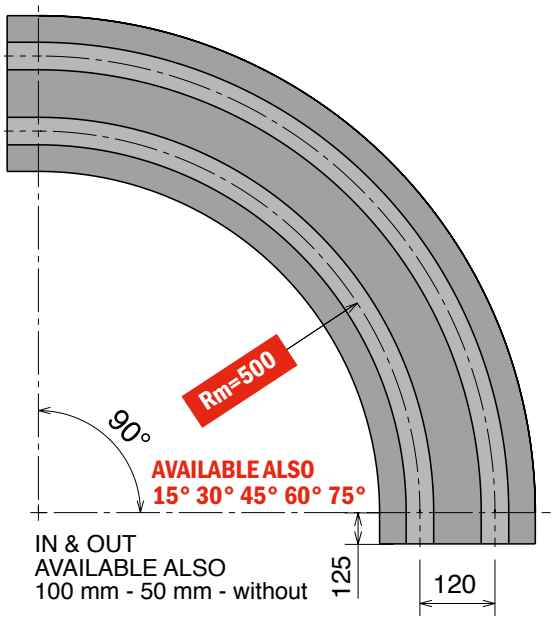

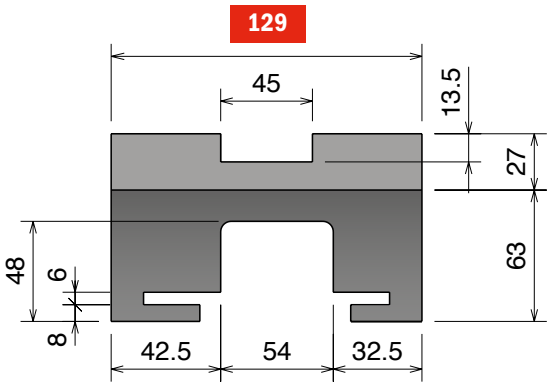

SINGLE TRACK

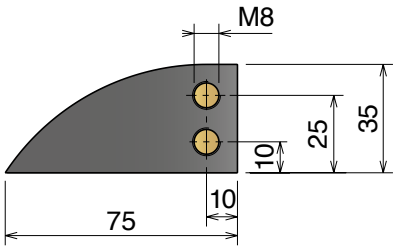

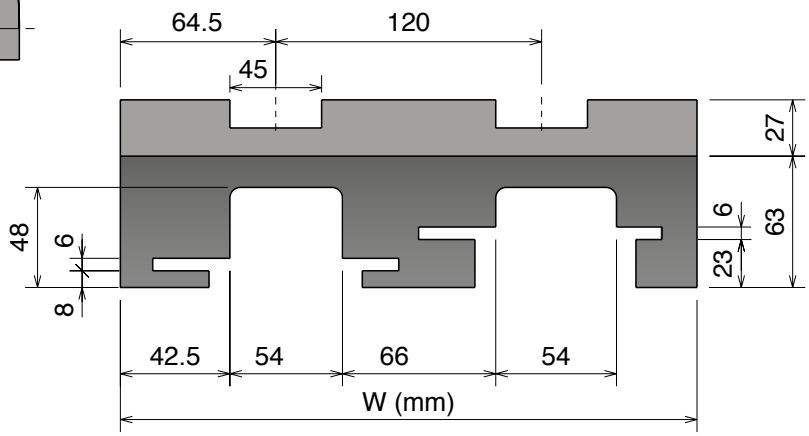

MULTI TRACK

Available in BluLub®

MAGNETIC SYSTEM

Upper part available, on request, also in BluLub® and for abrasive applications.

Part	Article-Nr.	Tracks	W	Material
715	71511615	1	129	
715	71511625	2	249	
715	71511635	3	369	
715	71511645	4	489	
715	71511655	5	609	

Standard codes on table

add "**B**" for BluLub®

add "**C**" for abrasive

Part	Article-Nr.	Tracks	W	Material
715	71511615RS	1	129	
715	71511625RS	2	249	
715	71511635RS	3	369	
715	71511645RS	4	489	
715	71511655RS	5	609	

RS
add "**RS**" for RS-version

Oadby Core product range
Oadby Available from stock in Leicester
Easy Available from stock in Italy
Standard Produced to order in Italy

Movex®

879-880-881 K450 *M22A Series*

Chain Reference	879 M - K450	880 M - K450	881 M - K450

Curva Larghezza Base = 129 mm; Passo = 120 mm
Curve Basic Width = 129 mm; Pitch = 120 mm
Kurve Basisbreite = 129 mm; Teilung = 120 mm

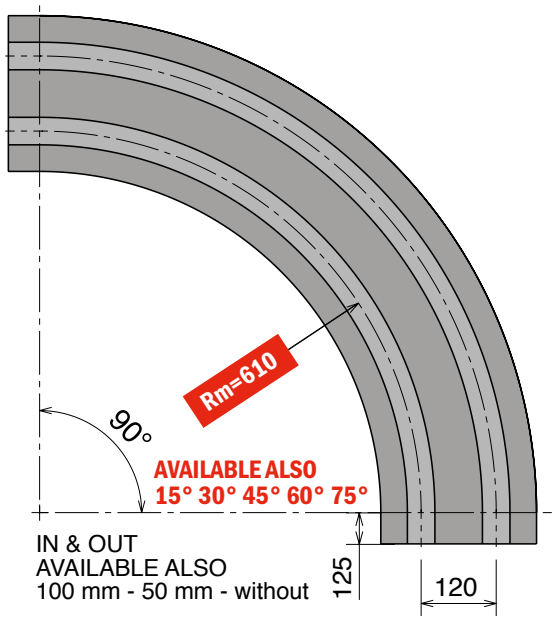

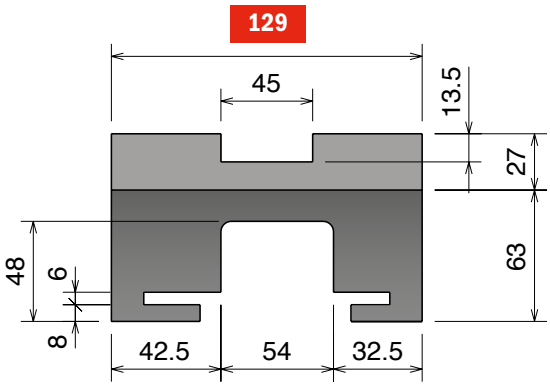

SINGLE TRACK

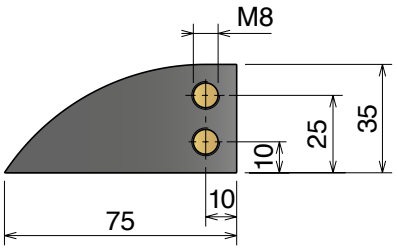

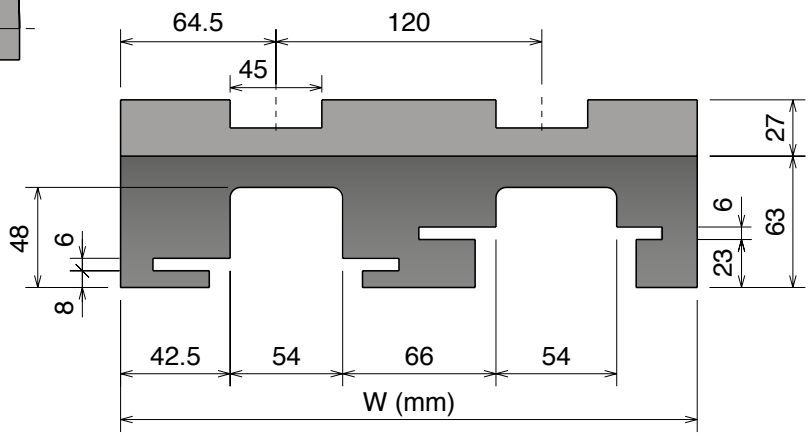

MULTI TRACK

Available in
BluLub®

MAGNETIC SYSTEM

Upper part available, on request, also in BluLub® and for abrasive applications.

Part	Article-Nr.	Tracks	W	Material
704	**70413615**	1	129	
704	**70413625**	2	249	
704	**70413635**	3	369	
704	**70413645**	4	489	
704	**70413655**	5	609	

Standard codes on table

add "**B**" for BluLub®

add "**C**" for abrasive

Part	Article-Nr.	Tracks	W	Material
704	**70413615RS**	1	129	
704	**70413625RS**	2	249	
704	**70413635RS**	3	369	
704	**70413645RS**	4	489	
704	**70413655RS**	5	609	

RS
add "**RS**" for RS-version

Materiale / Material / Materialien:
Polietilene UHMW-PE
Polyethylene UHMW-PE
Polyäthylen UHMW-PE

879-880-881 K450 M27 Series

Chain Reference	879 M - K450	880 M - K450	881 M - K450

Curva Larghezza Base = 129 mm; Passo = 117 mm
Curve Basic Width = 129 mm; Pitch = 117 mm
Kurve Basisbreite = 129 mm; Teilung = 117 mm

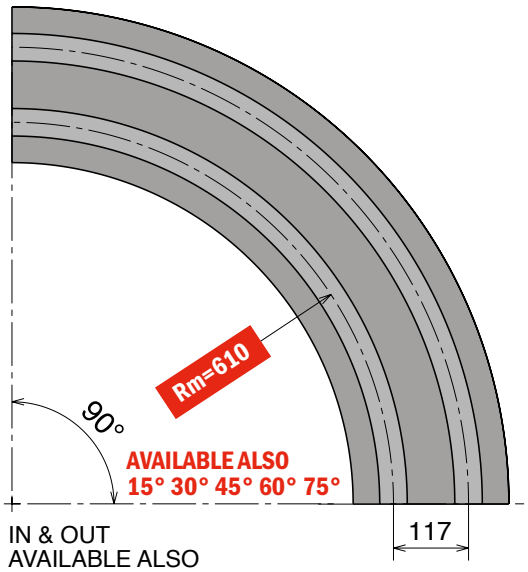

IN & OUT
AVAILABLE ALSO
100 mm - 50 mm

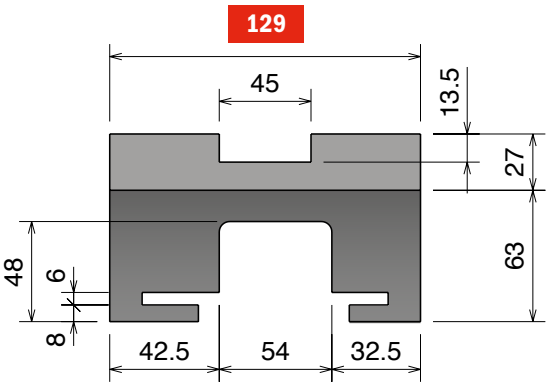

SINGLE TRACK

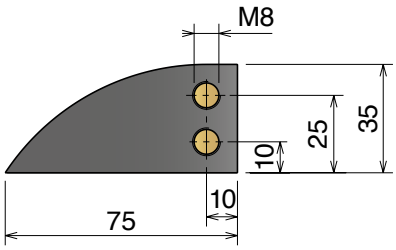

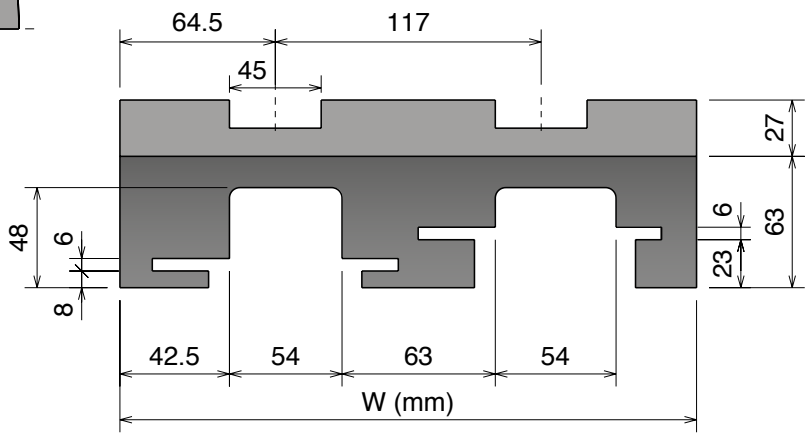

MULTI TRACK

Available in BluLub®

MAGNETIC SYSTEM

Upper part available, on request, also in BluLub® and for abrasive applications.

Part	Article-Nr.	Tracks	W
731	73113610	1	129
731	73113620	2	246
731	73113630	3	363
731	73113640	4	480
731	73113650	5	597
731	73113660	6	714
731	73113670	7	831
731	73113680	8	948

Standard codes on table

add "**B**" for BluLub®

add "**C**" for abrasive

Part	Article-Nr.	Tracks	W
731	73113610RS	1	129
731	73113620RS	2	246
731	73113630RS	3	363
731	73113640RS	4	480
731	73113650RS	5	597
731	73113660RS	6	714
731	73113670RS	7	831
731	73113680RS	8	948

RS
add "**RS**" for RS-version

Oadby Core product range
Oadby Available from stock in Leicester
Easy Available from stock in Italy
Standard Produced to order in Italy

Movex®

879-880-881 K750 *M61 Series*

Chain Reference	880 M - K750	881 M - K750

Curva Larghezza Base = 214 mm; Passo = 196 mm
Curve Basic Width = 214 mm; Pitch = 196 mm
Kurve Basisbreite = 214 mm; Teilung = 196 mm

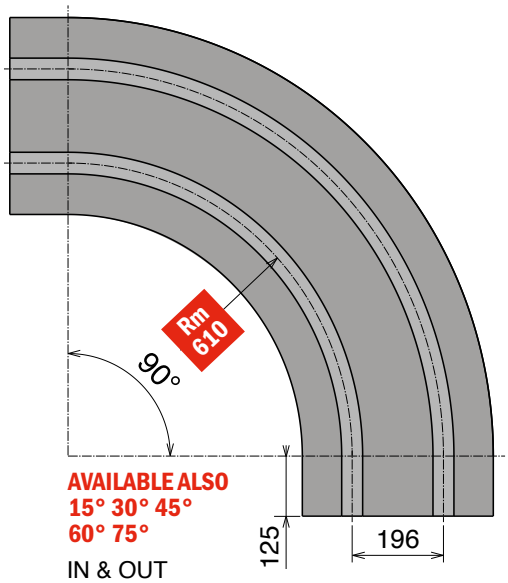

AVAILABLE ALSO
15° 30° 45°
60° 75°

IN & OUT
AVAILABLE ALSO
100 mm - 50 mm
without

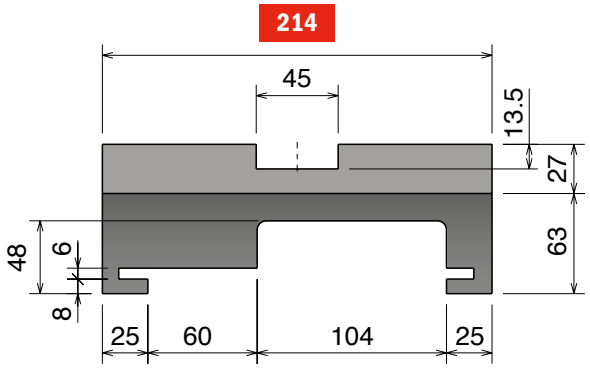

SINGLE TRACK

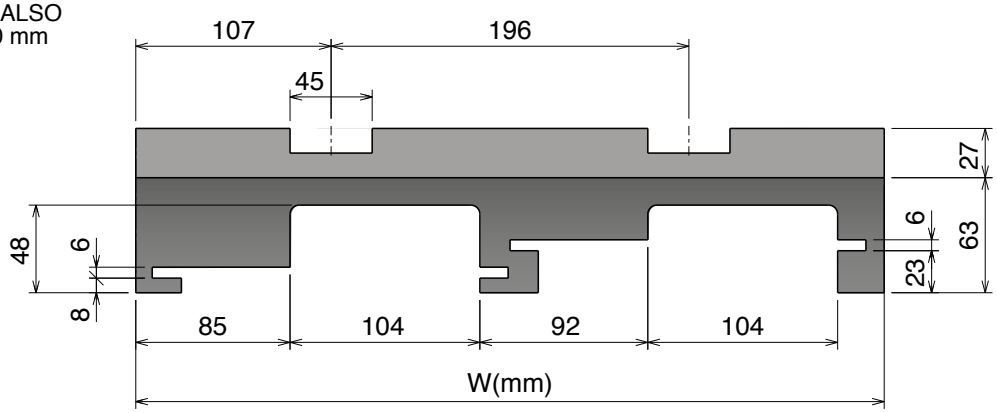

MULTI TRACK

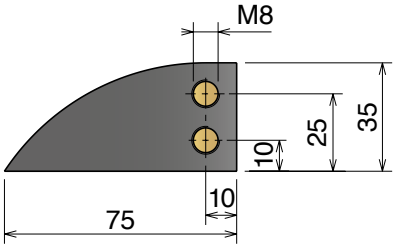

Available in
BluLub®

MAGNETIC SYSTEM

Upper part available, on request, also in BluLub® and for abrasive applications.

Part	Article-Nr.	Tracks	W	Material
716	**71613615**	1	214	
716	**71613625**	2	410	
716	**71613635**	3	606	

Standard codes on table

add "**B**" for BluLub®

add "**C**" for abrasive

Part	Article-Nr.	Tracks	W	Material
716	**71613615RS**	1	214	
716	**71613625RS**	2	410	
716	**71613635RS**	3	606	

RS
add "**RS**" for RS-version

Materiale / *Material / Materialien:*
Polietilene UHMW-PE
Polyethylene UHMW-PE
Polyäthylen UHMW-PE

880-881 K750 *M62/66/65 Series*

Chain Reference	880 M - K750	881 M - K750

Curva Larghezza Base = 214 mm
Curve Basic Width = 214 mm
Kurve Basisbreite = 214 mm

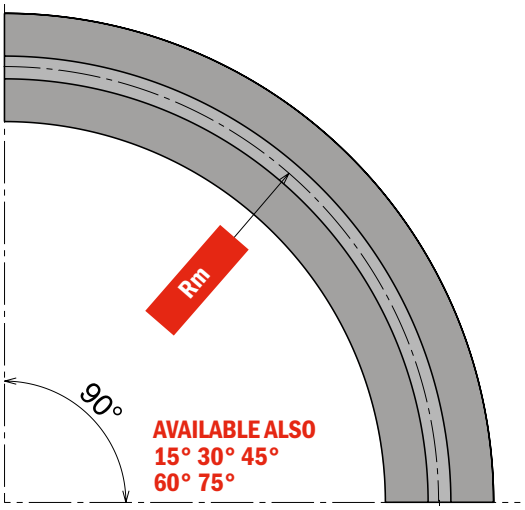

IN & OUT
AVAILABLE ALSO
125 mm - 100 mm - 50 mm

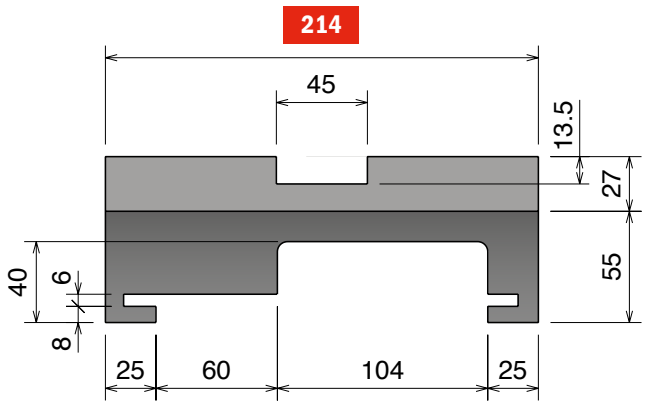

Available in BluLub®

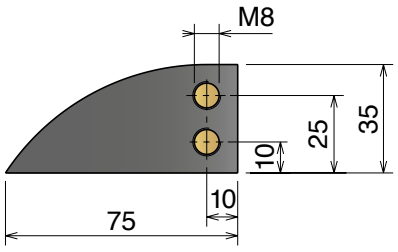

MAGNETIC SYSTEM

Upper part available, on request, also in BluLub® and for abrasive applications.

Part	Article-Nr.	Tracks	W	R	Material
707	70716610	1	214	750	
707	70718610	1	214	860	
707	70719610	1	214	1000	

Standard codes on table

add "**B**" for BluLub®

add "**C**" for abrasive

Part	Article-Nr.	Tracks	W	R	Material
707	70716610RS	1	214	750	
707	70718610RS	1	214	860	
707	70719610RS	1	214	1000	

RS
add "**RS**" for RS-version

Oadby Core product range
Oadby Available from stock in Leicester
Easy Available from stock in Italy
Standard Produced to order in Italy

Movex®

882 K750 *M81 Series*

Chain Reference 882 M - K750

Curva Larghezza Base = 200 mm; Passo = 195 mm
Curve Basic Width = 200 mm; Pitch = 195 mm
Kurve Basisbreite = 200 mm; Teilung = 195 mm

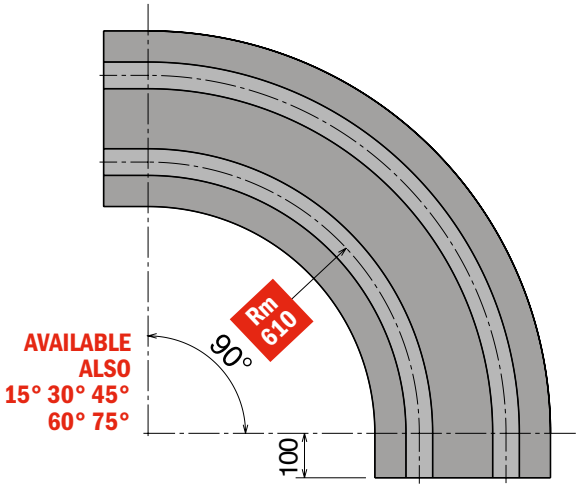

IN & OUT
AVAILABLE ALSO
125 mm - 50 mm - without

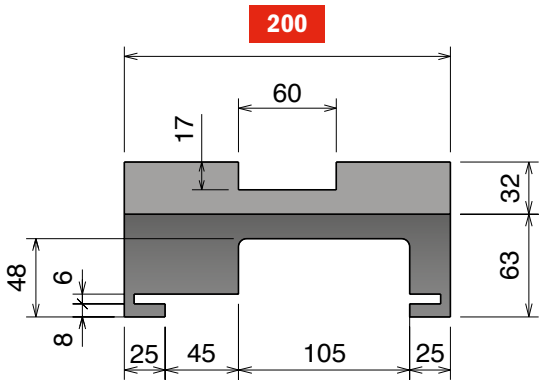

SINGLE TRACK

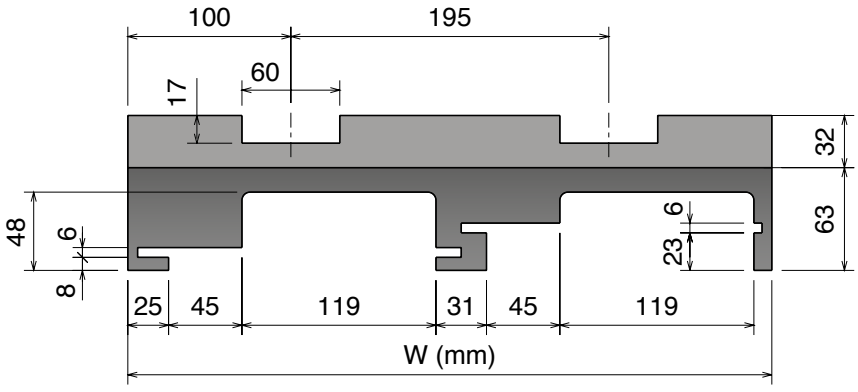

MULTI TRACK

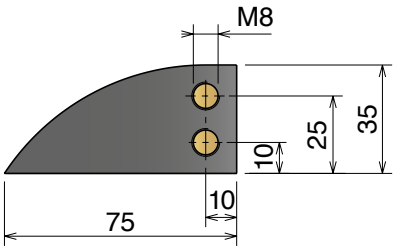

Available in
BluLub®

MAGNETIC SYSTEM

Upper part available, on request, also in BluLub® and for abrasive applications.

Part	Article-Nr.	Tracks	W	Material
717	**71713614**	1	200	
717	**71713624**	2	395	
717	**71713634**	3	590	
717	**71713644**	4	785	

Standard codes on table

add "**B**" for BluLub®

add "**C**" for abrasive

Part	Article-Nr.	Tracks	W	Material
717	**71713614RS**	1	200	
717	**71713624RS**	2	395	
717	**71713634RS**	3	590	
717	**71713644RS**	4	785	

RS
add "**RS**" for RS-version

Materiale / Material / Materialien:
Polietilene UHMW-PE
Polyethylene UHMW-PE
Polyäthylen UHMW-PE

882-8857 K750 M85 Series

Chain Reference	882 M - K750	8857 M - K750

Curva Larghezza Base = 200 mm; Passo = 195 mm
Curve Basic Width = 200 mm; Pitch = 195 mm
Kurve Basisbreite = 200 mm; Teilung = 195 mm

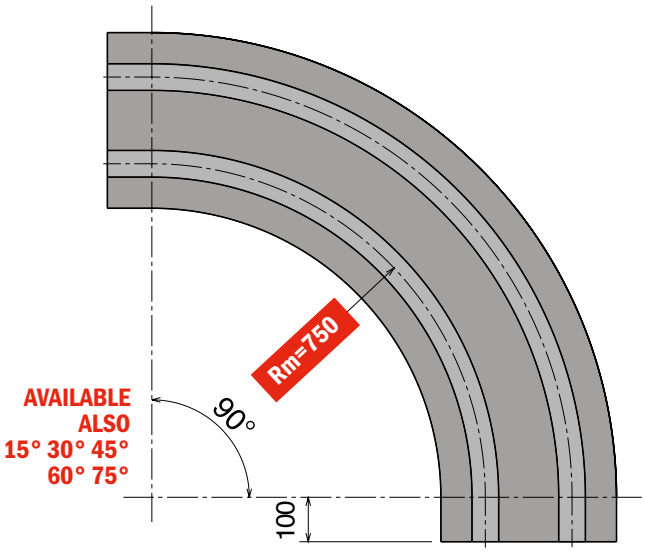

IN & OUT
AVAILABLE ALSO
125 mm - 50 mm - without

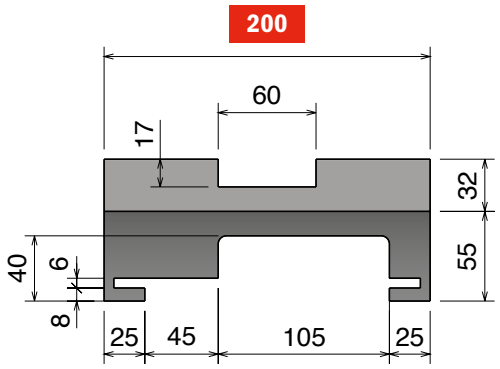

SINGLE TRACK

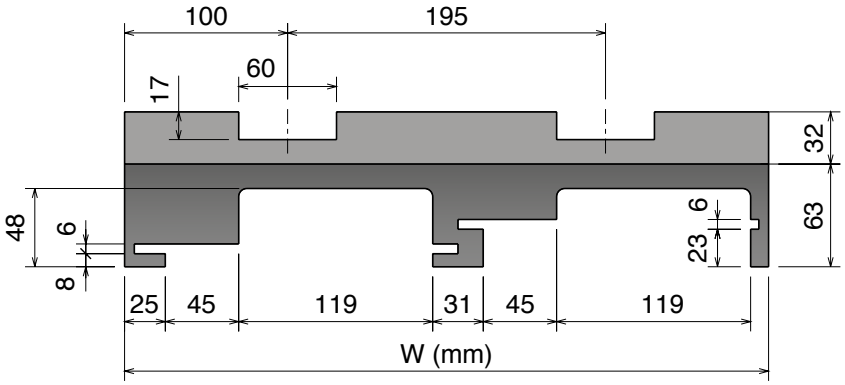

MULTI TRACK

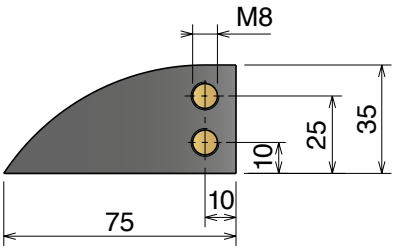

Available in BluLub®

MAGNETIC SYSTEM

Upper part available, on request, also in BluLub® and for abrasive applications.

Part	Article-Nr.	Tracks	W	Material
718	71816614	1	200	
718	71816624	2	395	
718	71816634	3	590	

Standard codes on table

add "**B**" for BluLub®

add "**C**" for abrasive

Part	Article-Nr.	Tracks	W	Material
718	71816614RS	1	200	
718	71816624RS	2	395	
718	71816634RS	3	590	

RS
add "**RS**" for RS-version

Oadby Core product range
Oadby Available from stock in Leicester
Easy Available from stock in Italy
Standard Produced to order in Italy

Movex®

882-8857 K750 *M86 Series*

Chain Reference	882 M - K750	8857 M - K750

Curva Larghezza Base = 214 mm; Passo = 200 mm
Curve Basic Width = 214 mm; Pitch = 200 mm
Kurve Basisbreite = 214 mm; Teilung = 200 mm

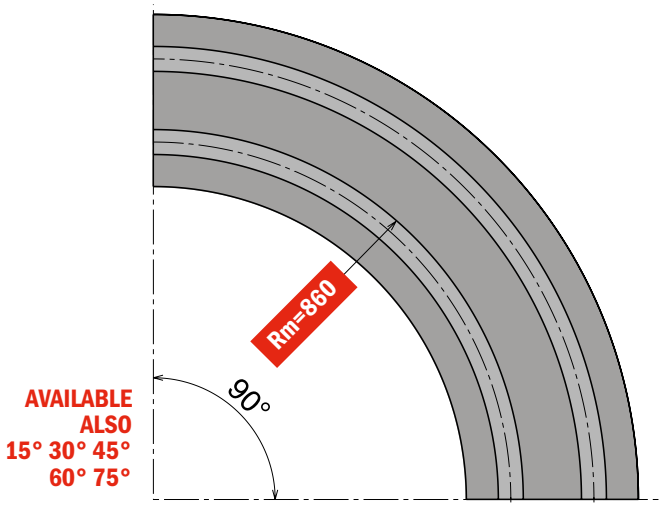

IN & OUT
AVAILABLE ALSO
125 mm
100 mm
50 mm

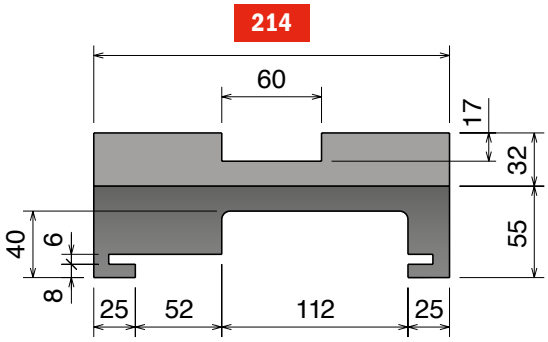

SINGLE TRACK

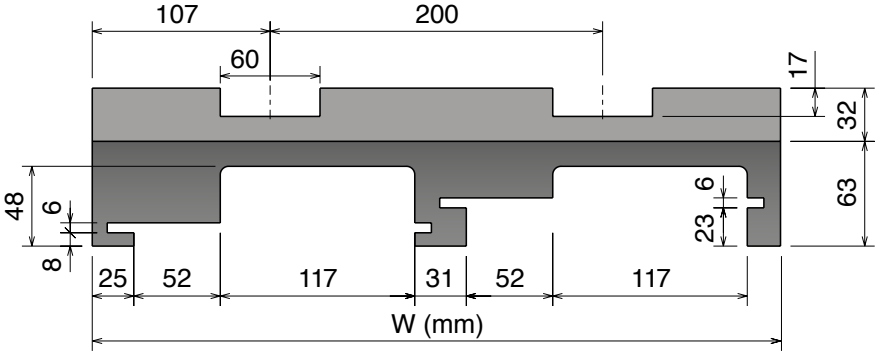

MULTI TRACK

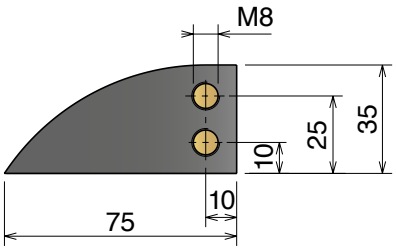

Available in
BluLub®

MAGNETIC SYSTEM

Upper part available, on request, also in BluLub® and for abrasive applications.

Part	Article-Nr.	Tracks	W	Material
708	**70818610**	1	214	
708	**70818620**	2	414	
708	**70818630**	3	614	

Standard codes on table

add "**B**" for BluLub®

add "**C**" for abrasive

Part	Article-Nr.	Tracks	W	Material
708	**70818610RS**	1	214	
708	**70818620RS**	2	414	
708	**70818630RS**	3	614	

RS
add "**RS**" for RS-version

Materiale / *Material / Materialien:*
Polietilene UHMW-PE
Polyethylene UHMW-PE
Polyäthylen UHMW-PE

882-8857 K750 *M80 Series*

Chain Reference	882 M - K750	8857 M - K750

Curva Larghezza Base = 200 mm; Passo = 195 mm
Curve Basic Width = 200 mm; Pitch = 195 mm
Kurve Basisbreite = 200 mm; Teilung = 195 mm

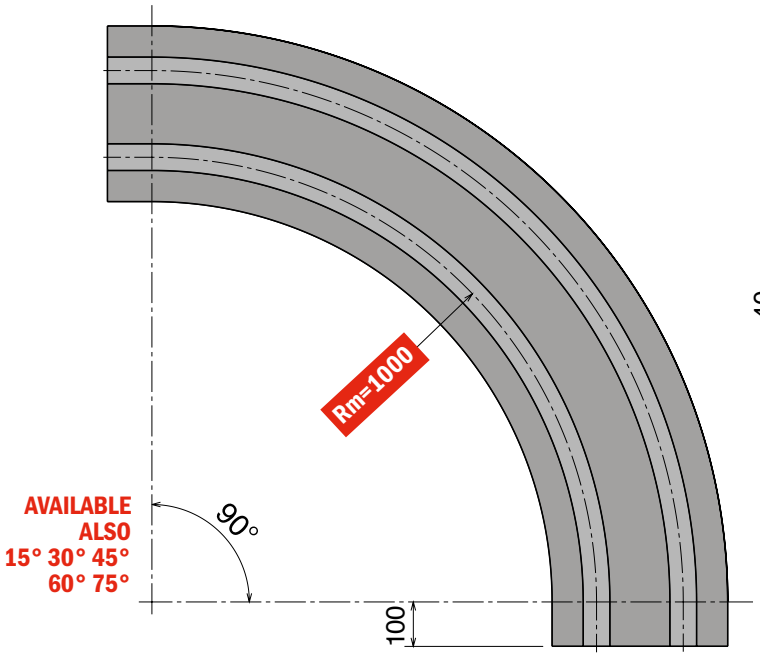

IN & OUT
AVAILABLE ALSO
125 mm - 50 mm - without

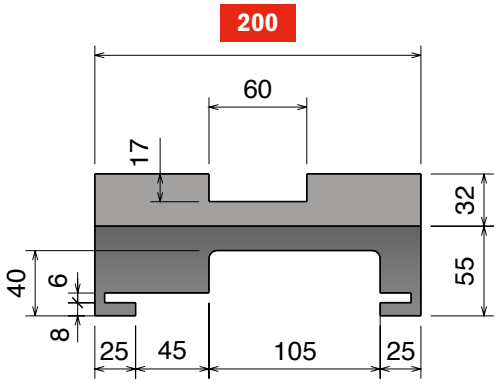

SINGLE TRACK

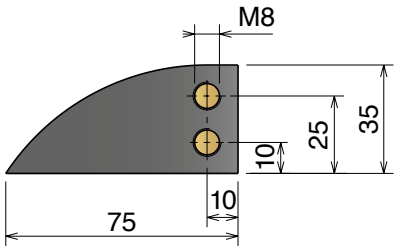

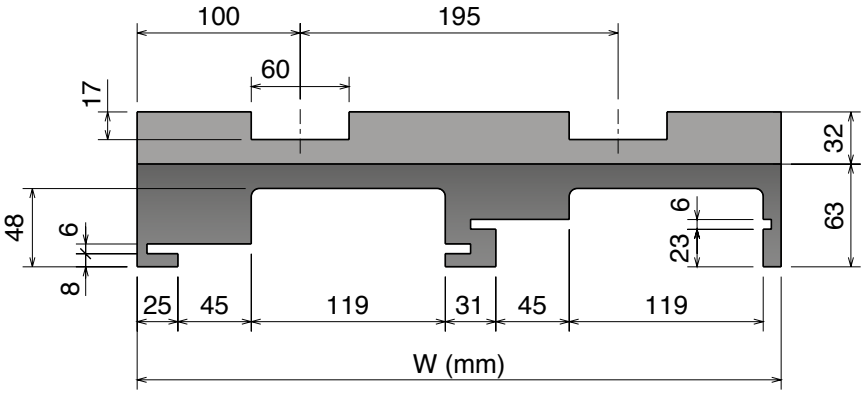

MULTI TRACK

Available in BluLub®

MAGNETIC SYSTEM

Upper part available, on request, also in BluLub® and for abrasive applications.

Part	Article-Nr.	Tracks	W	Material
719	71919614	1	200	
719	71919624	2	395	
719	71919634	3	590	

Standard codes on table

add "**B**" for BluLub®

add "**C**" for abrasive

Part	Article-Nr.	Tracks	W	Material
719	71919614RS	1	200	
719	71919624RS	2	395	
719	71919634RS	3	590	

RS
add "**RS**" for RS-version

Oadby Core product range
Oadby Available from stock in Leicester
Easy Available from stock in Italy
Standard Produced to order in Italy

Movex®

882 M K1000 *M93/M94 Series*

Chain Reference 882 M - K1000

Curva Larghezza Base = 270 mm
Curve Basic Width = 270 mm
Kurve Basisbreite = 270 mm

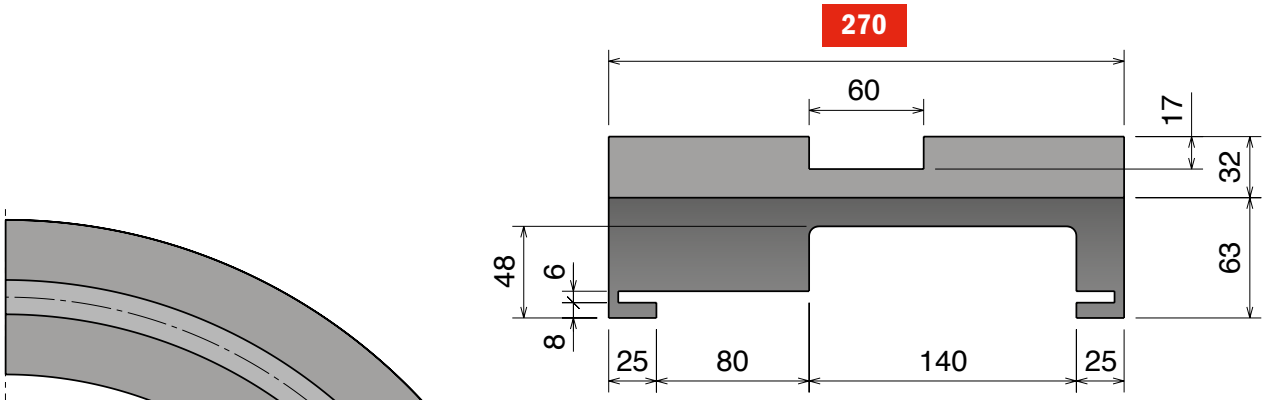

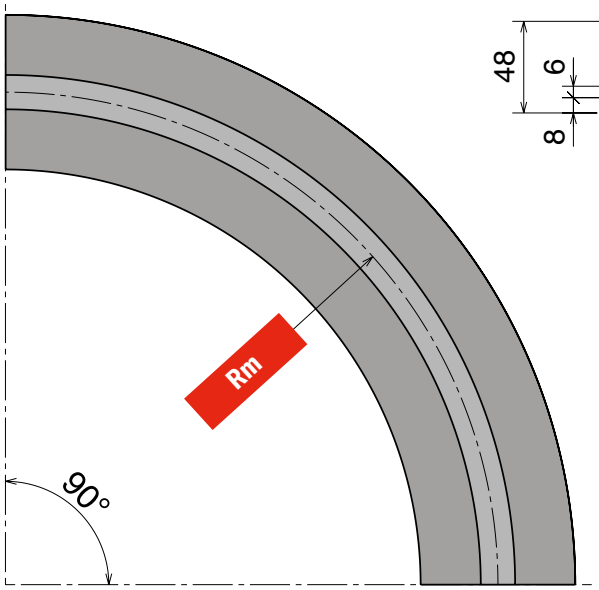

AVAILABLE ALSO
15° 30° 45°
60° 75°

IN & OUT
AVAILABLE ALSO
125 mm - 100 mm - 50 mm

Available in BluLub®

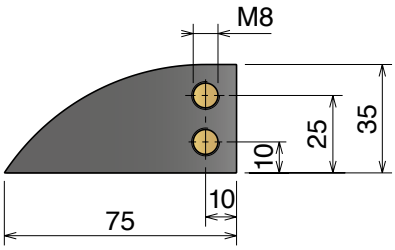

MAGNETIC SYSTEM

Upper part available, on request, also in BluLub® and for abrasive applications.

Part	Article-Nr.	Tracks	Rm	W	Material
709	**70918610**	1	860	270	
709	**70919610**	1	1000	270	

Standard codes on table

add "**B**" for BluLub®

add "**C**" for abrasive

Part	Article-Nr.	Tracks	Rm	W	Material
709	**70918610RS**	1	860	270	
709	**70919610RS**	1	1000	270	

RS
add "**RS**" for RS-version

Materiale / Material / Materialien:
Polietilene UHMW-PE
Polyethylene UHMW-PE
Polyäthylen UHMW-PE

882 M K1200 M97/M98 Series

Chain Reference 882 M - K1200

Curva Larghezza Base = 320 mm
Curve Basic Width = 320 mm
Kurve Basisbreite = 320 mm

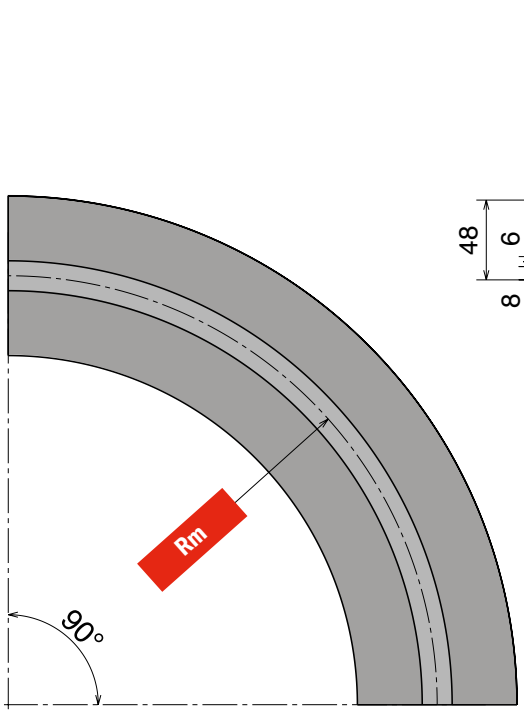

AVAILABLE ALSO
15° 30° 45°
60° 75°

IN & OUT
AVAILABLE ALSO
125 mm - 100 mm - 50 mm

Available in BluLub®

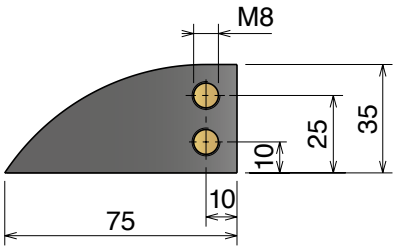

MAGNETIC SYSTEM

Upper part available, on request, also in BluLub® and for abrasive applications.

Part	Article-Nr.	Tracks	Rm	W	Material
710	**71018610**	1	860	320	
710	**71019610**	1	1000	320	

Standard codes on table

add "**B**" for BluLub®

add "**C**" for abrasive

Part	Article-Nr.	Tracks	Rm	W	Material
710	**71018610RS**	1	860	320	
710	**71019610RS**	1	1000	320	

RS
add "**RS**" for RS-version

Oadby Core product range
Oadby Available from stock in Leicester
Easy Available from stock in Italy
Standard Produced to order in Italy

Movex®

882 LBP K750 *MP861 Series*

Chain Reference 882 M LBP - K750

Curva Larghezza Base = 214 mm
Curve Basic Width = 214 mm
Kurve Basisbreite = 214 mm

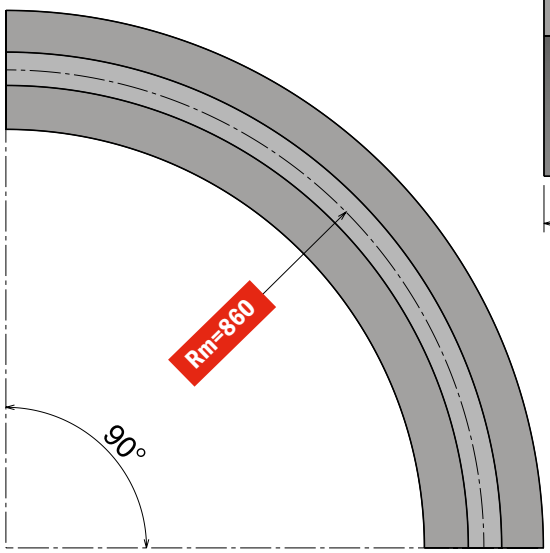

AVAILABLE ALSO
15° 30° 45°
60° 75°

IN & OUT
AVAILABLE ALSO
125 mm - 100 mm - 50 mm

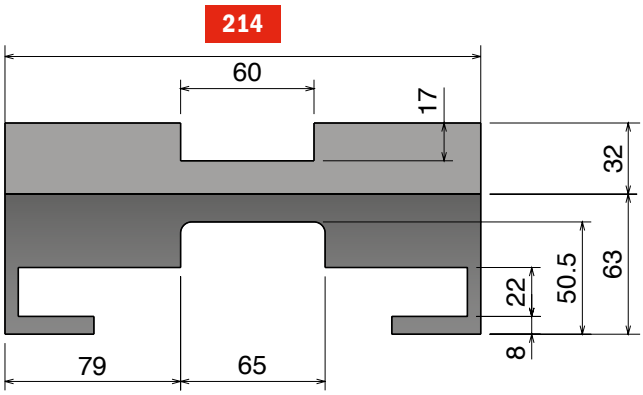

Available in BluLub®

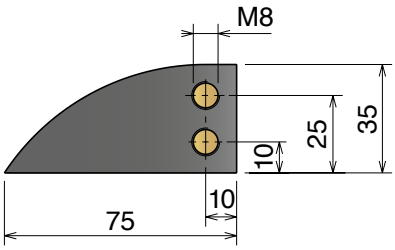

MAGNETIC SYSTEM

Upper part available, on request, also in BluLub® and for abrasive applications.

Part	Article-Nr.	Tracks	W	Material
781	**78118610**	1	214	**Standard** codes on table
				add "**B**" for BluLub®
				add "**C**" for abrasive

Part	Article-Nr.	Tracks	W	Material
781	**78118610RS**	1	270	**RS** add "**RS**" for RS-version

Materiale / Material / Materialien:
Polietilene UHMW-PE
Polyethylene UHMW-PE
Polyäthylen UHMW-PE

882 LBP K1000 MP931/MP941 Series

Chain Reference 882 M LBP - K1000

Curva Larghezza Base = 270 mm
Curve Basic Width = 270 mm
Kurve Basisbreite = 270 mm

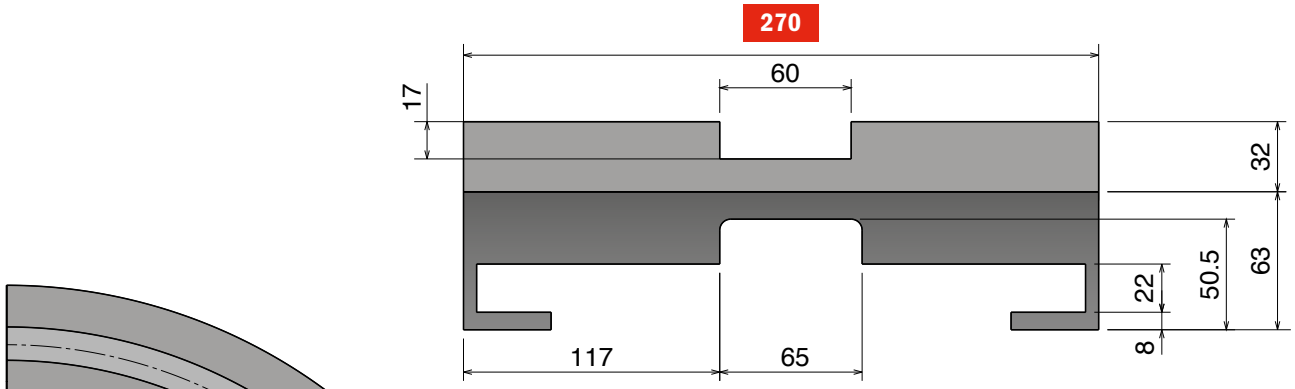

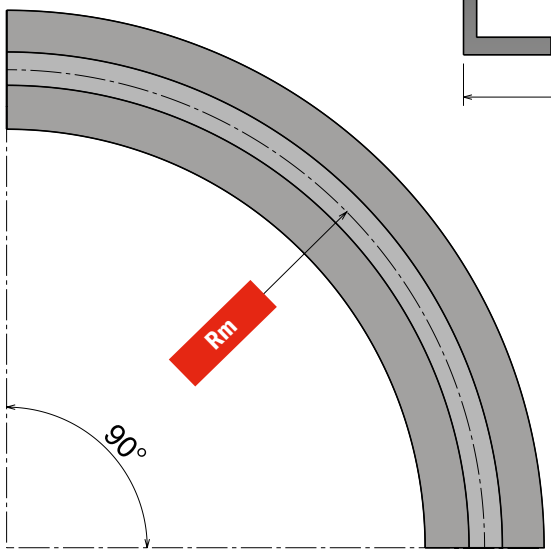

IN & OUT
AVAILABLE ALSO
125 mm - 100 mm - 50 mm

Available in BluLub®

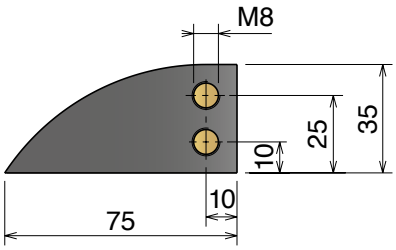

MAGNETIC SYSTEM

Upper part available, on request, also in BluLub® and for abrasive applications.

MP931 Series

Part	α 15°	α 30°	α 45°	α 60°	α 75°	α 90°		Tracks	R	W
784	78418110	78418210	78418310	78418410	78418510	78418610		1	860	270

Material **Standard** codes on table add "**B**" for BluLub® add "**C**" for abrasive add "**RS**" for RS-version

MP941 Series

Part	α 15°	α 30°	α 45°	α 60°	α 75°	α 90°		Tracks	R	W
784	78419110	78419210	78419310	78419410	78419510	78419610		1	1000	270

Material **Standard** codes on table add "**B**" for BluLub® add "**C**" for abrasive add "**RS**" for RS-version

Oadby Core product range
Oadby Available from stock in Leicester
Easy Available from stock in Italy
Standard Produced to order in Italy

Movex®

882 LBP K1000 *MP91 Series*

Chain Reference 882 M LBP - K1000

Curva Larghezza Base = 290 mm
Curve Basic Width = 290 mm
Kurve Basisbreite = 290 mm

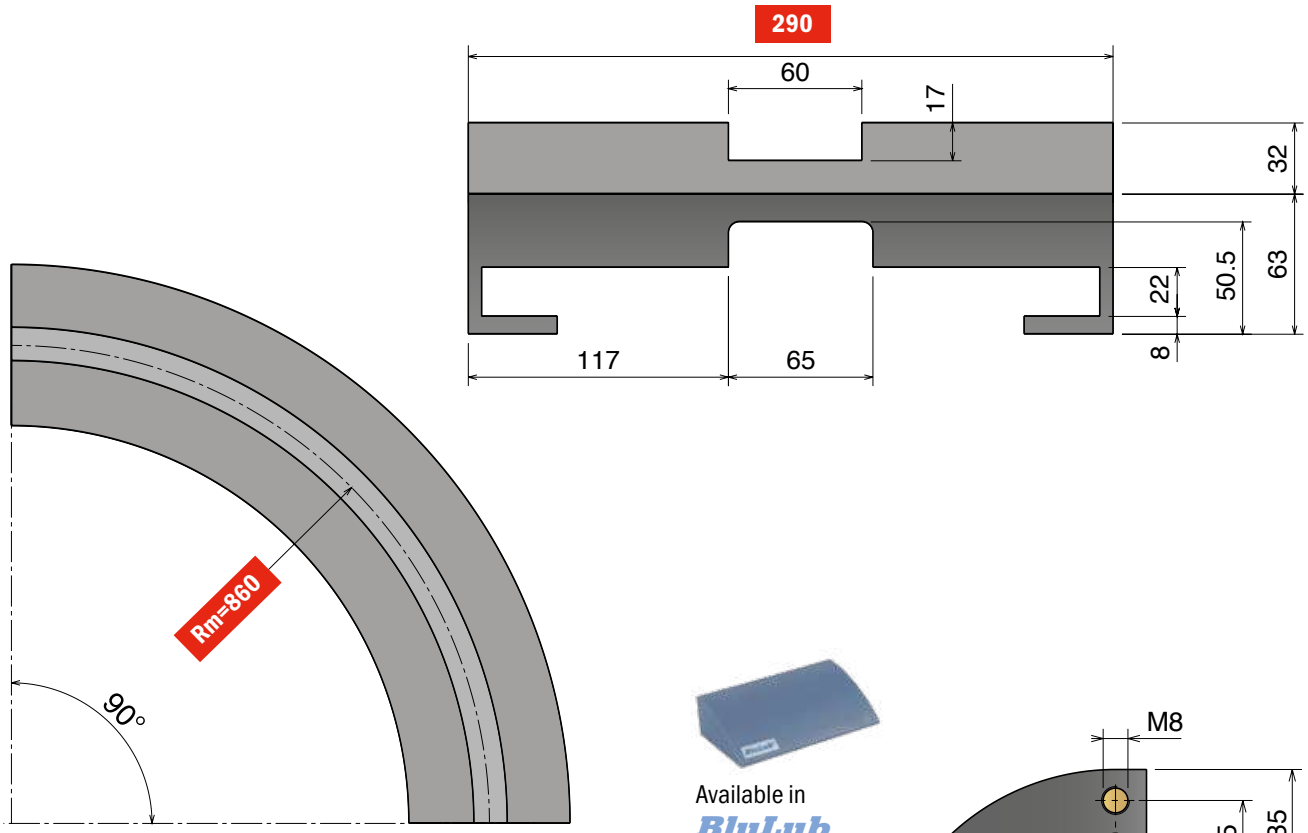

AVAILABLE ALSO
15° 30° 45°
60° 75°

IN & OUT
AVAILABLE ALSO
125 mm - 100 mm - 50 mm

Available in BluLub®

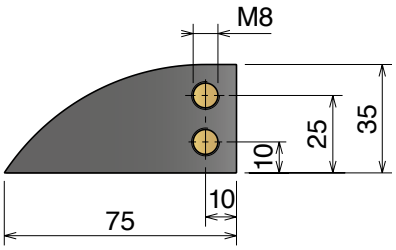

MAGNETIC SYSTEM

Upper part available, on request, also in BluLub® and for abrasive applications.

Part	Article-Nr.	Tracks	W	Material
782	78218610	1	290	

Standard codes on table

add "**B**" for BluLub®

add "**C**" for abrasive

Part	Article-Nr.	Tracks	W	Material
782	78218610RS	1	290	

RS
add "**RS**" for RS-version

Materiale / *Material / Materialien:*
Polietilene UHMW-PE
Polyethylene UHMW-PE
Polyäthylen UHMW-PE

882 LBP K1200 *MP971/MP981 Series*

Chain Reference 882 M LBP - K1200

Curva Larghezza Base = 340 mm
Curve Basic Width = 340 mm
Kurve Basisbreite = 340 mm

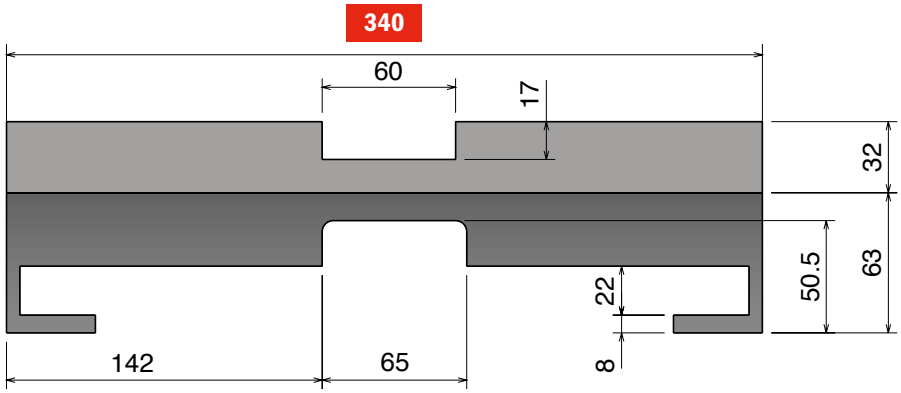

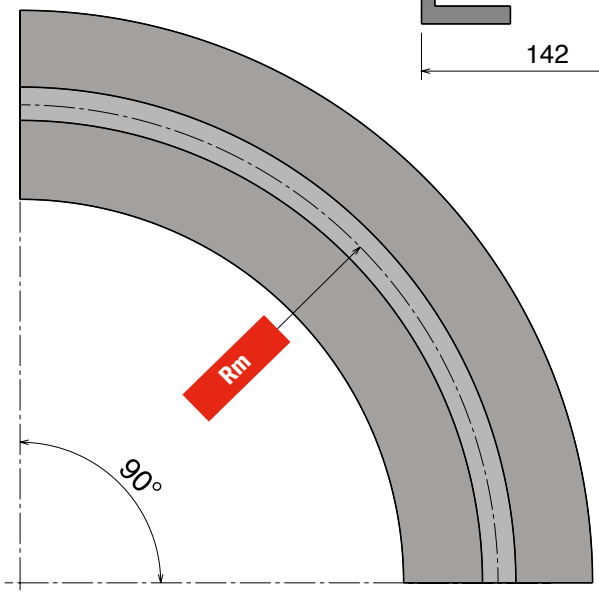

AVAILABLE ALSO
15° 30° 45°
60° 75°

IN & OUT
AVAILABLE ALSO
125 mm - 100 mm - 50 mm

Available in BluLub®

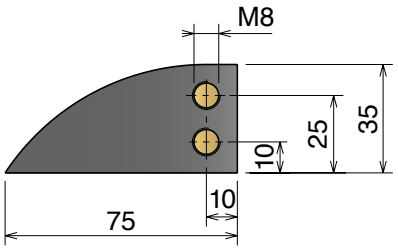

Upper part available, on request, also in BluLub® and for abrasive applications.

MAGNETIC SYSTEM

Part	Article-Nr.	Tracks	Rm	W	Material
783	**78318610**	1	860	340	
783	**78319610**	1	1000	340	

Standard codes on table

add "**B**" for BluLub®

add "**C**" for abrasive

Part	Article-Nr.	Tracks	Rm	W	Material
783	**78318610RS**	1	860	340	
783	**78319610RS**	1	1000	340	

RS
add "**RS**" for RS-version

Oadby Core product range
Oadby Available from stock in Leicester
Easy Available from stock in Italy
Standard Produced to order in Italy

Movex®

260 M *MB7 Series*

Chain Reference 260 M - K330

Curva Larghezza Base = 100 mm; Passo = 85 mm
Curve Basic Width = 100 mm; Pitch = 85 mm
Kurve Basisbreite = 100 mm; Teilung = 85 mm

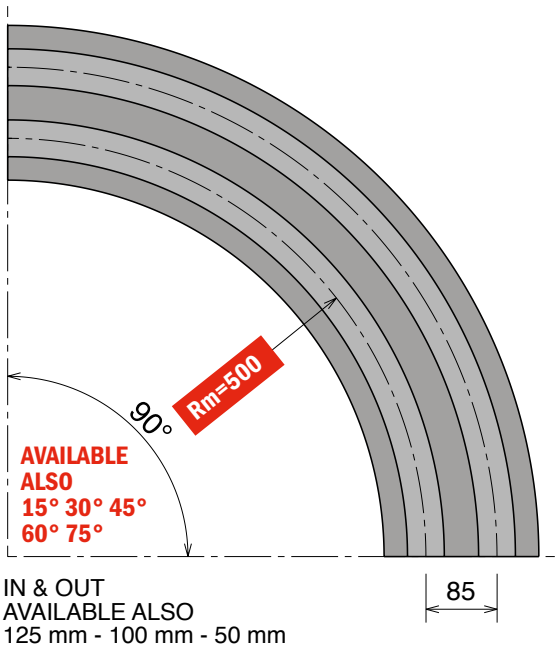

IN & OUT
AVAILABLE ALSO
125 mm - 100 mm - 50 mm

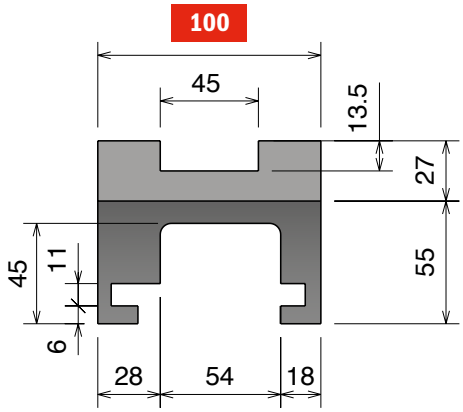

SINGLE TRACK

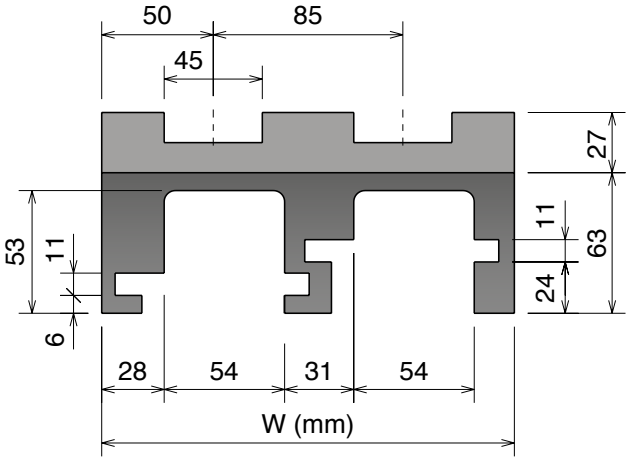

MULTI TRACK

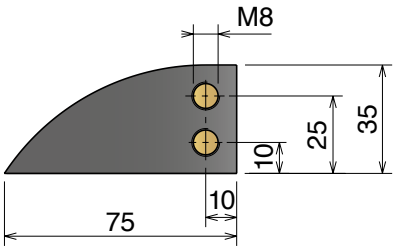

Available in
BluLub®

MAGNETIC SYSTEM

Upper part available, on request, also in BluLub® and for abrasive applications.

Part	Article-Nr.	Tracks	W	Material
705	**70511610**	1	100	
705	**70511620**	2	185	
705	**70511630**	3	270	
705	**70511640**	4	355	
705	**70511650**	5	440	
705	**70511660**	6	525	
705	**70511670**	7	610	
705	**70511680**	8	695	

Standard codes on table

add "**B**" for BluLub®

add "**C**" for abrasive

Part	Article-Nr.	Tracks	W	Material
705	**70511610RS**	1	100	
705	**70511620RS**	2	185	
705	**70511630RS**	3	270	
705	**70511640RS**	4	355	
705	**70511650RS**	5	440	
705	**70511660RS**	6	525	
705	**70511670RS**	7	610	
705	**70511680RS**	8	695	

RS
add "**RS**" for RS-version

Materiale / *Material / Materialien:*
Polietilene UHMW-PE
Polyethylene UHMW-PE
Polyäthylen UHMW-PE

260 M *MB6 Series*

Chain Reference 260 M - K330

Curva Larghezza Base = 100 mm; Passo = 85 mm
Curve Basic Width = 100 mm; Pitch = 85 mm
Kurve Basisbreite = 100 mm; Teilung = 85 mm

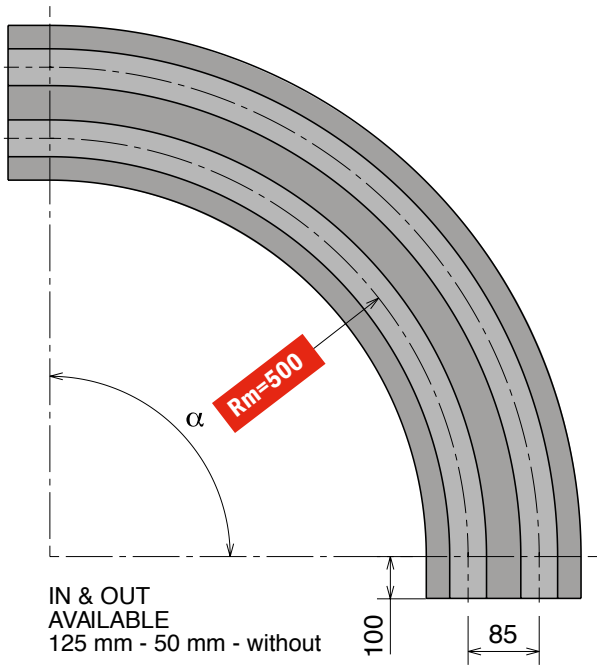

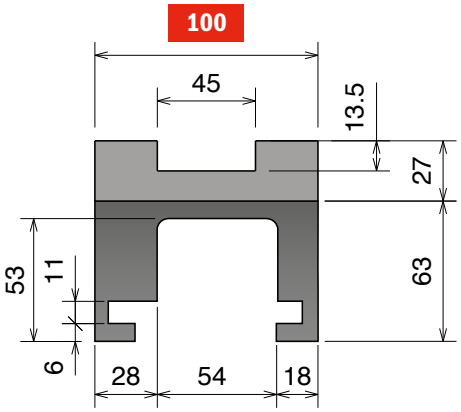

SINGLE TRACK

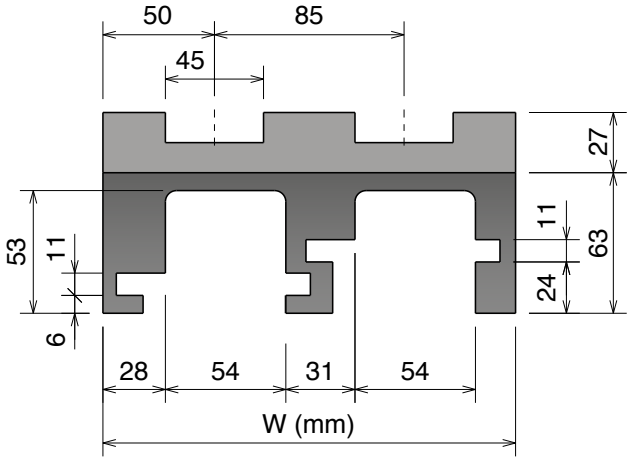

MULTI TRACK

Available in
BluLub®

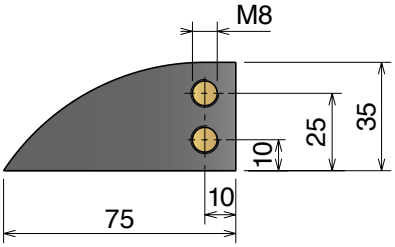

MAGNETIC SYSTEM

Upper part available, on request, also in BluLub® and for abrasive applications.

Part	α 15°	α 30°	α 45°	α 60°	α 75°	α 90°	Tracks	W
732	73211114	73211214	73211314	73211414	73211514	73211614	1	100
732	73211124	73211224	73211324	73211424	73211524	73211624	2	185
732	73211134	73211234	73211334	73211434	73211534	73211634	3	270
732	73211144	73211244	73211344	73211444	73211544	73211644	4	355
732	73211154	73211254	73211354	73211454	73211554	73211654	5	440
732	73211164	73211264	73211364	73211464	73211564	73211664	6	525
732	73211174	73211274	73211374	73211474	73211574	73211674	7	610
732	73211184	73211284	73211384	73211484	73211584	73211684	8	695

Material

Standard codes on table

add "**B**" for BluLub®

add "**C**" for abrasive

Part	α 15°	α 30°	α 45°	α 60°	α 75°	α 90°	Tracks	W
732	73211114RS	73211214RS	73211314RS	73211414RS	73211514RS	73211614RS	1	100
732	73211124RS	73211224RS	73211324RS	73211424RS	73211524RS	73211624RS	2	185
732	73211134RS	73211234RS	73211334RS	73211434RS	73211534RS	73211634RS	3	270
732	73211144RS	73211244RS	73211344RS	73211444RS	73211544RS	73211644RS	4	355
732	73211154RS	73211254RS	73211354RS	73211454RS	73211554RS	73211654RS	5	440
732	73211164RS	73211264RS	73211364RS	73211464RS	73211564RS	73211664RS	6	525
732	73211174RS	73211274RS	73211374RS	73211474RS	73211574RS	73211674RS	7	610
732	73211184RS	73211284RS	73211384RS	73211484RS	73211584RS	73211684RS	8	695

Material

RS
add "**RS**" for RS-version

Oadby Core product range
Oadby Available from stock in Leicester
Easy Available from stock in Italy
Standard Produced to order in Italy

Movex®

260 M *MB4 Series*

Chain Reference 260 M - K330

Curva Larghezza Base = 111 mm; Passo = 85 mm
Curve Basic Width = 111 mm; Pitch = 85 mm
Kurve Basisbreite = 111 mm; Teilung = 85 mm

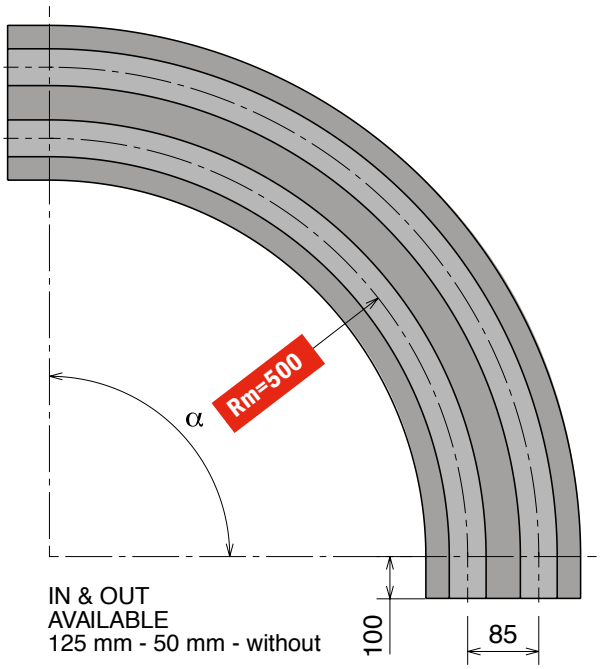

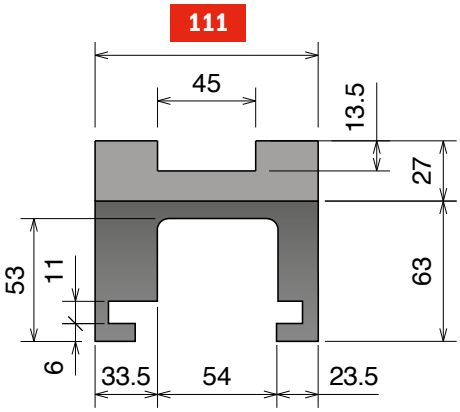

SINGLE TRACK

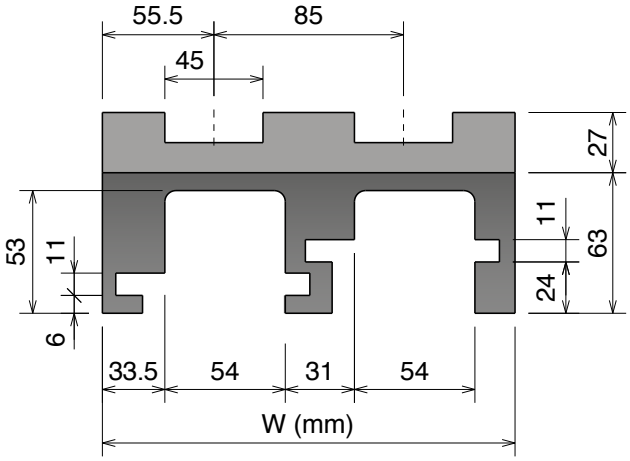

MULTI TRACK

Available in
BluLub®

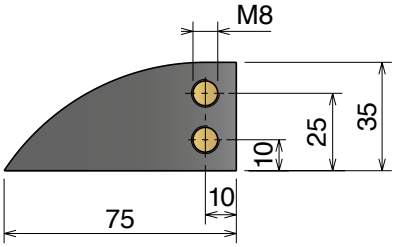

MAGNETIC SYSTEM

Upper part available, on request, also in BluLub® and for abrasive applications.

Part	α 15°	α 30°	α 45°	α 60°	α 75°	α 90°	Tracks	W	Material
733	73311114	73311214	73311314	73311414	73311514	73311614	1	111	
733	73311124	73311224	73311324	73311424	73311524	73311624	2	196	
733	73311134	73311234	73311334	73311434	73311534	73311634	3	281	
733	73311144	73311244	73311344	73311444	73311544	73311644	4	366	
733	73311154	73311254	73311354	73311454	73311554	73311654	5	451	
733	73311164	73311264	73311364	73311464	73311564	73311664	6	536	
733	73311174	73311274	73311374	73311474	73311574	73311674	7	621	
733	73311184	73311284	73311384	73311484	73311584	73311684	8	706	

Standard codes on table

add "**B**" for BluLub®

add "**C**" for abrasive

Part	α 15°	α 30°	α 45°	α 60°	α 75°	α 90°	Tracks	W	Material
733	73311114RS	73311214RS	73311314RS	73311414RS	73311514RS	73311614RS	1	111	
733	73311124RS	73311224RS	73311324RS	73311424RS	73311524RS	73311624RS	2	196	
733	73311134RS	73311234RS	73311334RS	73311434RS	73311534RS	73311634RS	3	281	
733	73311144RS	73311244RS	73311344RS	73311444RS	73311544RS	73311644RS	4	366	
733	73311154RS	73311254RS	73311354RS	73311454RS	73311554RS	73311654RS	5	451	
733	73311164RS	73311264RS	73311364RS	73311464RS	73311564RS	73311664RS	6	536	
733	73311174RS	73311274RS	73311374RS	73311474RS	73311574RS	73311674RS	7	621	
733	73311184RS	73311284RS	73311384RS	73311484RS	73311584RS	73311684RS	8	706	

RS
add "**RS**" for RS-version

Materiale / *Material / Materialien:*
Polietilene UHMW-PE
Polyethylene UHMW-PE
Polyäthylen UHMW-PE

260 M *MB8 Series*

Chain Reference 260 M - K330

Curva Larghezza Base = 100 mm; Passo = 85 mm
Curve Basic Width = 100 mm; Pitch = 85 mm
Kurve Basisbreite = 100 mm; Teilung = 85 mm

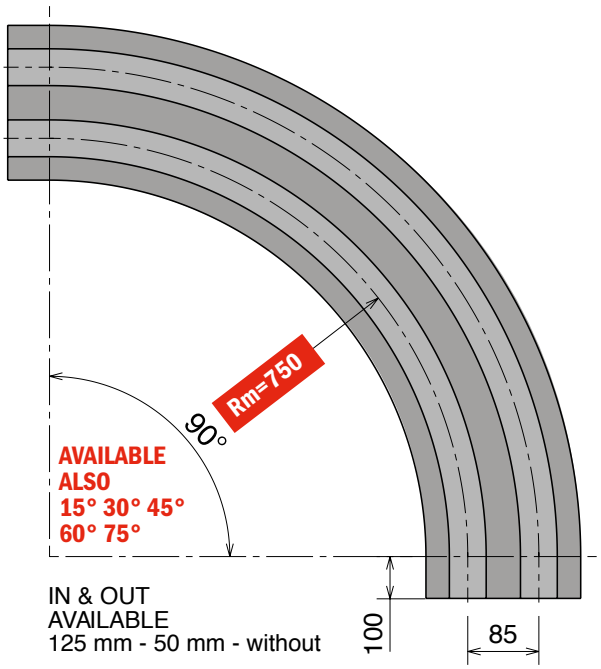

Available in BluLub®

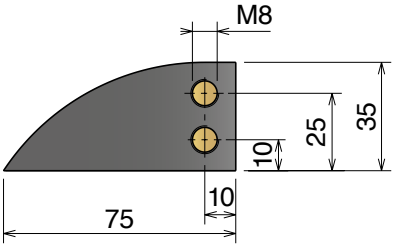

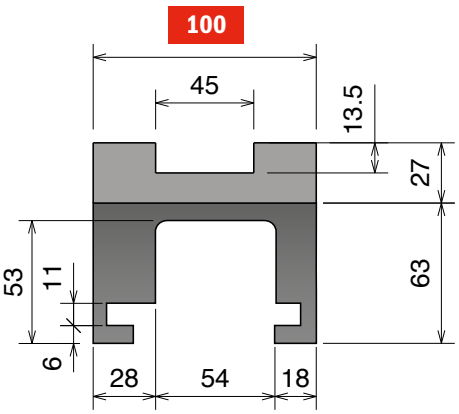

SINGLE TRACK

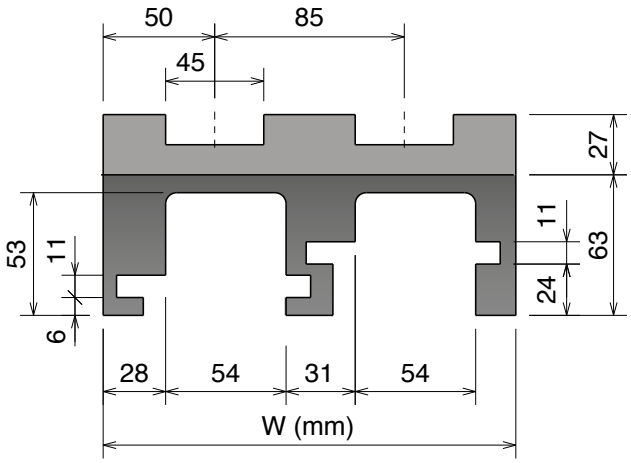

MULTI TRACK

MAGNETIC SYSTEM

Upper part available, on request, also in BluLub® and for abrasive applications.

Part	Article-Nr.	Tracks	W
732	73216614	1	100
732	73216624	2	185
732	73216634	3	270
732	73216644	4	355
732	73216654	5	440
732	73216664	6	525
732	73216674	7	610
732	73216684	8	695

Standard codes on table

add "**B**" for BluLub®

add "**C**" for abrasive

Part	Article-Nr.	Tracks	W
732	73216614RS	1	100
732	73216624RS	2	185
732	73216 634RS	3	270
732	73216644RS	4	355
732	73216654RS	5	440
732	73216664RS	6	525
732	73216674RS	7	610
732	73216684RS	8	695

RS
add "**RS**" for RS-version

Oadby Core product range
Oadby Available from stock in Leicester
Easy Available from stock in Italy
Standard Produced to order in Italy

Movex®

260 M *MB5D Series*

Chain Reference 260 M - K330

Curva Larghezza Base = 100 mm; Passo = 85 mm
Curve Basic Width = 100 mm; Pitch = 85 mm
Kurve Basisbreite = 100 mm; Teilung = 85 mm

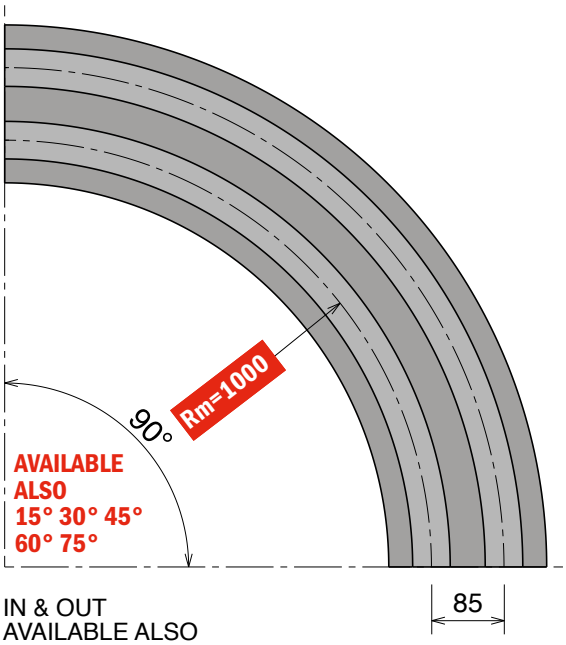

IN & OUT
AVAILABLE ALSO
125 mm - 100 mm - 50 mm

Available in BluLub®

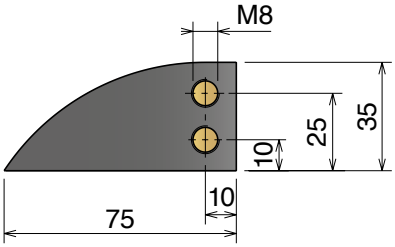

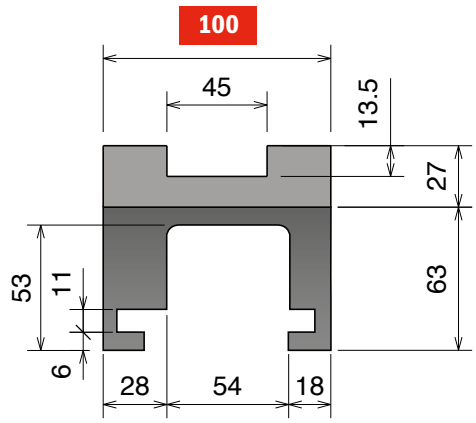

SINGLE TRACK

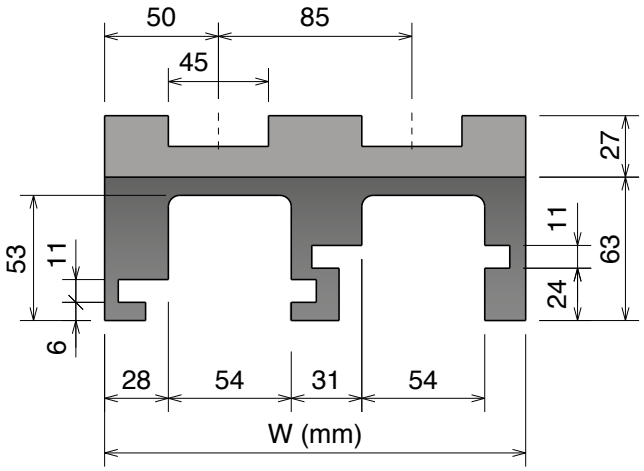

MULTI TRACK

MAGNETIC SYSTEM

Upper part available, on request, also in BluLub® and for abrasive applications.

Part	Article-Nr.	Tracks	W
732	73219610	1	100
732	73219620	2	185
732	73219630	3	270
732	73219640	4	355
732	73219650	5	440
732	73219660	6	525
732	73219670	7	610
732	73219680	8	695

Standard codes on table

add "**B**" for BluLub®

add "**C**" for abrasive

Part	Article-Nr.	Tracks	W
732	73219610RS	1	100
732	73219620RS	2	185
732	73219630RS	3	270
732	73219640RS	4	355
732	73219650RS	5	440
732	73219660RS	6	525
732	73219670RS	7	610
732	73219680RS	8	695

RS
add "**RS**" for RS-version

Materiale / *Material / Materialien:*
Polietilene UHMW-PE
Polyethylene UHMW-PE
Polyäthylen UHMW-PE

260 M K450 *MB22 Series*

Chain Reference 260 M - K450

Curva Larghezza Base = 129 mm; Passo = 117 mm
Curve Basic Width = 129 mm; Pitch = 117 mm
Kurve Basisbreite = 129 mm; Teilung = 117 mm

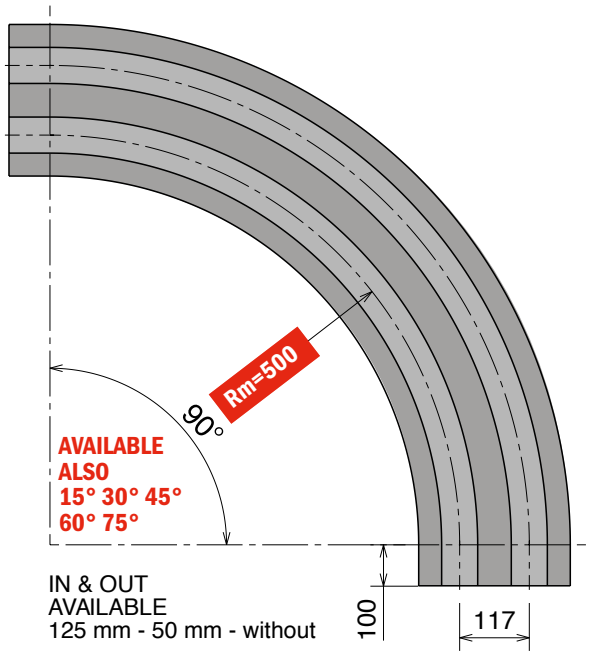

Available in BluLub®

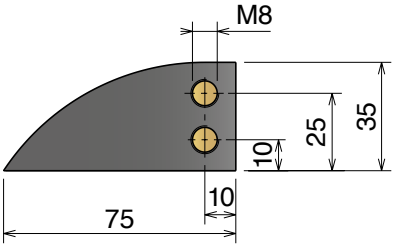

129

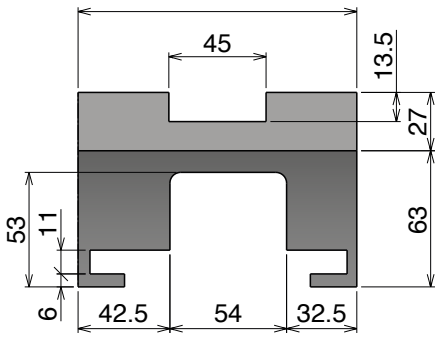

SINGLE TRACK

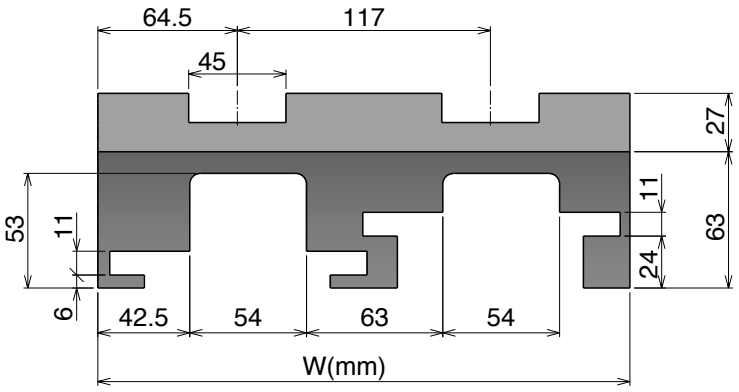

MULTI TRACK

MAGNETIC SYSTEM

Upper part available, on request, also in BluLub® and for abrasive applications.

Part	Article-Nr.	Tracks	W
734	73411614	1	129
734	73411624	2	246
734	73411634	3	363
734	73411644	4	480

Standard codes on table

add "**B**" for BluLub®

add "**C**" for abrasive

Part	Article-Nr.	Tracks	W
734	73411614RS	1	129
734	73411624RS	2	246
734	73411634RS	3	363
734	73411644RS	4	480

RS
add "**RS**" for RS-version

Oadby Core product range
Oadby Available from stock in Leicester
Easy Available from stock in Italy
Standard Produced to order in Italy

Movex®

260 M K450 *MB27 Series*

Chain Reference 260 M - K450

Curva Larghezza Base = 129 mm; Passo = 117 mm
Curve Basic Width = 129 mm; Pitch = 117 mm
Kurve Basisbreite = 129 mm; Teilung = 117 mm

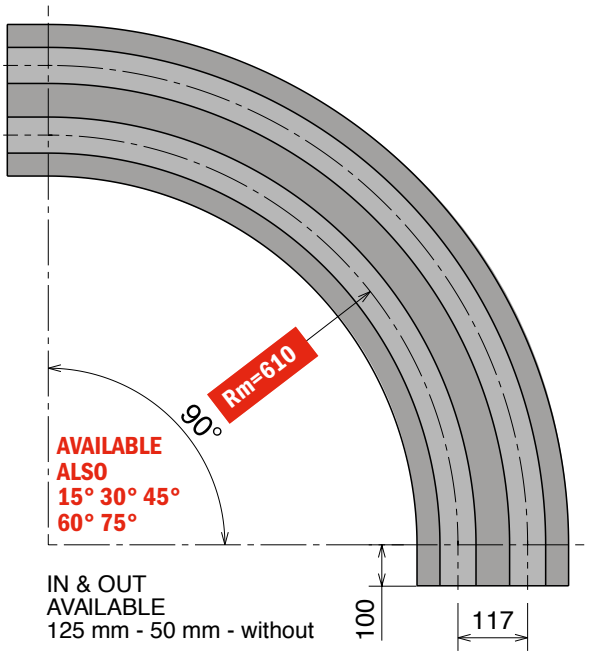

Available in
BluLub®

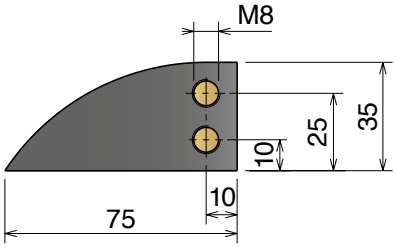

129

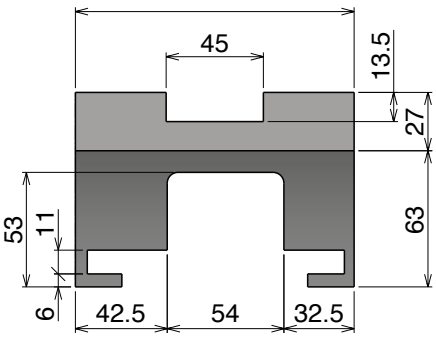

SINGLE TRACK

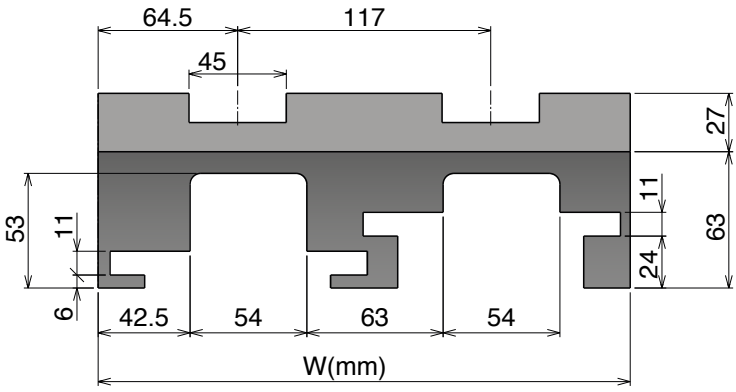

MULTI TRACK

MAGNETIC SYSTEM

Upper part available, on request, also in BluLub® and for abrasive applications.

Part	Article-Nr.	Tracks	W	Material
734	**73413614**	1	129	
734	**73413624**	2	246	
734	**73413634**	3	363	
734	**73413644**	4	480	

Standard codes on table

add "**B**" for BluLub®

add "**C**" for abrasive

Part	Article-Nr.	Tracks	W	Material
734	**73413614RS**	1	129	
734	**73413624RS**	2	246	
734	**73413634RS**	3	363	
734	**73413644RS**	4	480	

RS
add "**RS**" for RS-version

Materiale / *Material / Materialien:*
Polietilene UHMW-PE
Polyethylene UHMW-PE
Polyäthylen UHMW-PE

261 M MC7 Series

Chain Reference 261 M - K330

Curva Larghezza Base = 100 mm; Passo = 85 mm
Curve Basic Width = 100 mm; Pitch = 85 mm
Kurve Basisbreite = 100 mm; Teilung = 85 mm

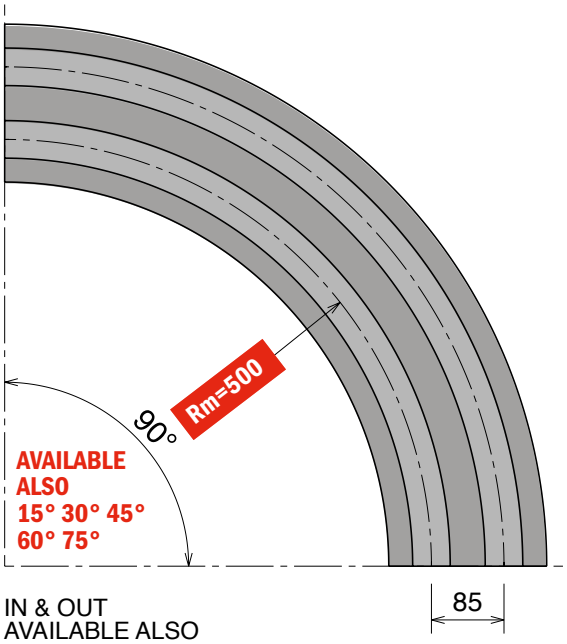

IN & OUT
AVAILABLE ALSO
125 mm - 100 mm - 50 mm

Available in BluLub®

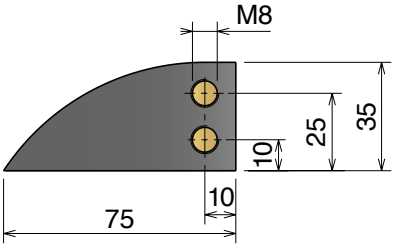

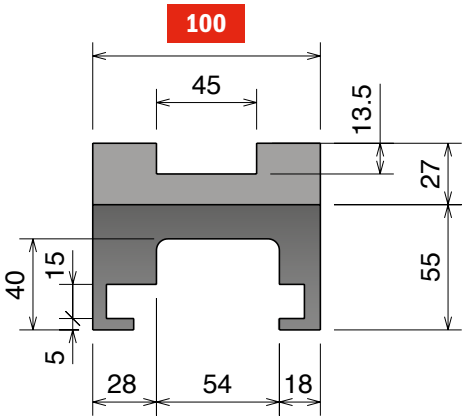

SINGLE TRACK

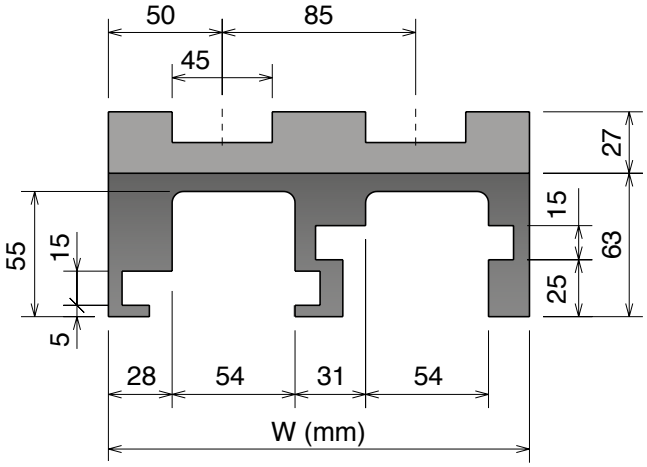

MULTI TRACK

MAGNETIC SYSTEM

Upper part available, on request, also in BluLub® and for abrasive applications.

Part	Article-Nr.	Tracks	W
706	70611610	1	100
706	70611620	2	185
706	70611630	3	270
706	70611640	4	355
706	70611650	5	440
706	70611660	6	525
706	70611670	7	610
706	70611680	8	695

Standard codes on table

add "**B**" for BluLub®

add "**C**" for abrasive

Part	Article-Nr.	Tracks	W
706	70611610RS	1	100
706	70611620RS	2	185
706	70611630RS	3	270
706	70611640RS	4	355
706	70611650RS	5	440
706	70611660RS	6	525
706	70611670RS	7	610
706	70611680RS	8	695

RS
add "**RS**" for RS-version

Oadby Core product range
Oadby Available from stock in Leicester
Easy Available from stock in Italy
Standard Produced to order in Italy

Movex®

261 M *MC6 Series*

Chain Reference 261 M - K330

Curva Larghezza Base = 100 mm; Passo = 85 mm
Curve Basic Width = 100 mm; Pitch = 85 mm
Kurve Basisbreite = 100 mm; Teilung = 85 mm

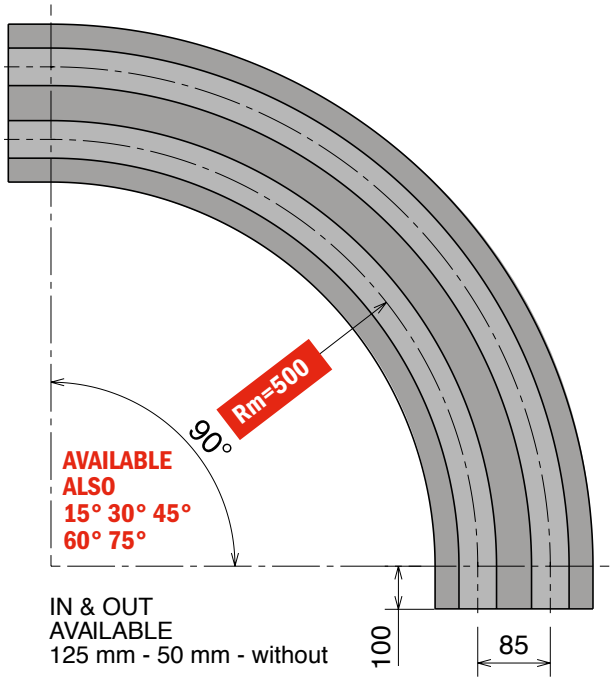

Available in BluLub®

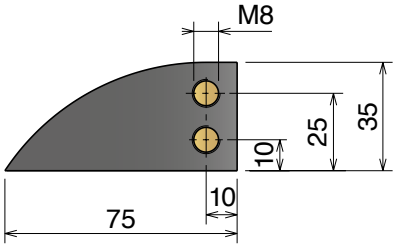

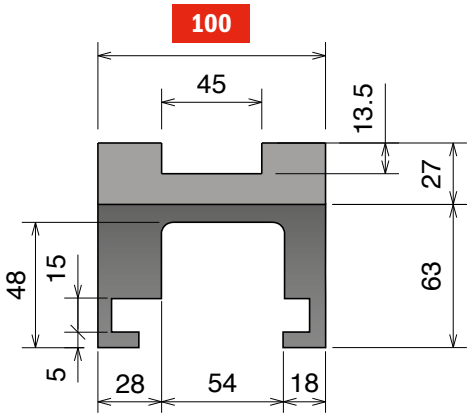

SINGLE TRACK

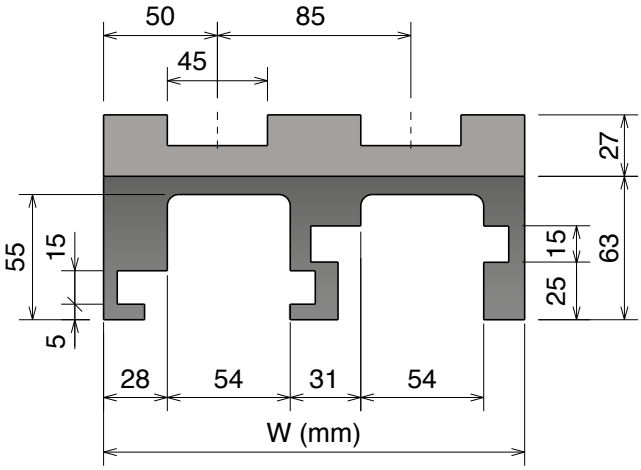

MULTI TRACK

MAGNETIC SYSTEM

Upper part available, on request, also in BluLub® and for abrasive applications.

Part	Article-Nr.	Tracks	W	Material
706	70611614	1	100	
706	70611624	2	185	
706	70611634	3	270	
706	70611644	4	355	
706	70611654	5	440	
706	70611664	6	525	
706	70611674	7	610	
706	70611684	8	695	

Standard codes on table

add "**B**" for BluLub®

add "**C**" for abrasive

Part	Article-Nr.	Tracks	W	Material
706	70611614RS	1	100	
706	70611624RS	2	185	
706	70611634RS	3	270	
706	70611644RS	4	355	
706	70611654RS	5	440	
706	70611664RS	6	525	
706	70611674RS	7	610	
706	70611684RS	8	695	

RS add "**RS**" for RS-version

Materiale / *Material / Materialien:*
Polietilene UHMW-PE
Polyethylene UHMW-PE
Polyäthylen UHMW-PE

261 M MC4 Series

Chain Reference 261 M - K330

Curva Larghezza Base = 111 mm; Passo = 85 mm
Curve Basic Width = 111 mm; Pitch = 85 mm
Kurve Basisbreite = 111 mm; Teilung = 85 mm

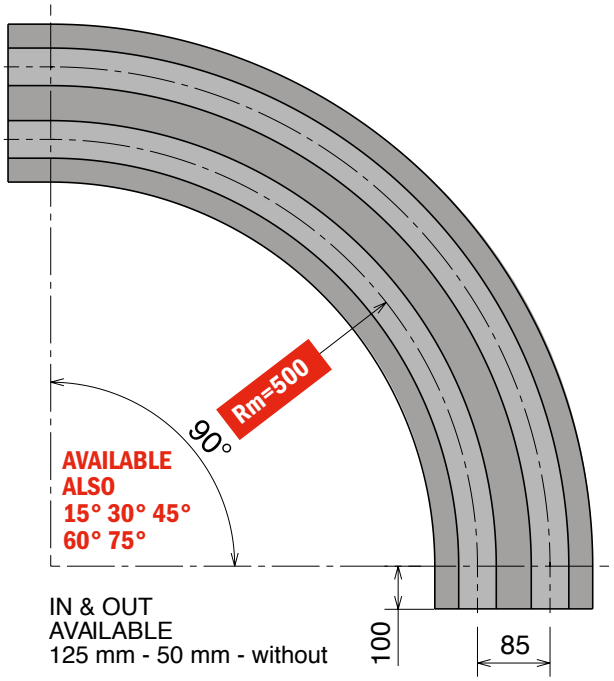

Available in BluLub®

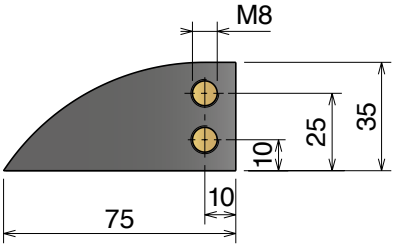

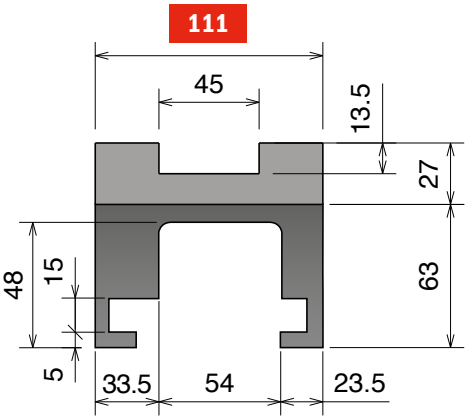

SINGLE TRACK

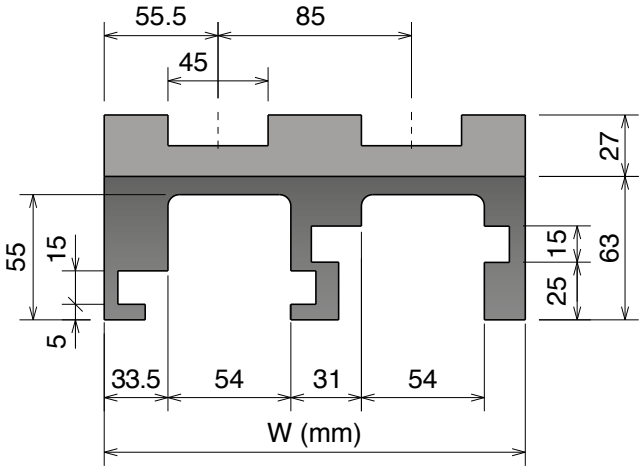

MULTI TRACK

MAGNETIC SYSTEM

Upper part available, on request, also in BluLub® and for abrasive applications.

Part	Article-Nr.	Tracks	W
735	73511614	1	111
735	73511624	2	196
735	73511634	3	281
735	73511644	4	366
735	73511654	5	451
735	73511664	6	536
735	73511674	7	621
735	73511684	8	706

Standard codes on table

add "**B**" for BluLub®

add "**C**" for abrasive

Part	Article-Nr.	Tracks	W
735	73511614RS	1	111
735	73511624RS	2	196
735	73511634RS	3	281
735	73511644RS	4	366
735	73511654RS	5	451
735	73511664RS	6	536
735	73511674RS	7	621
735	73511684RS	8	706

RS
add "**RS**" for RS-version

Oadby Core product range
Oadby Available from stock in Leicester
Easy Available from stock in Italy
Standard Produced to order in Italy

Movex®

261 M *MC8 Series*

Chain Reference 261 M - K330

Curva Larghezza Base = 100 mm; Passo = 85 mm
Curve Basic Width = 100 mm; Pitch = 85 mm
Kurve Basisbreite = 100 mm; Teilung = 85 mm

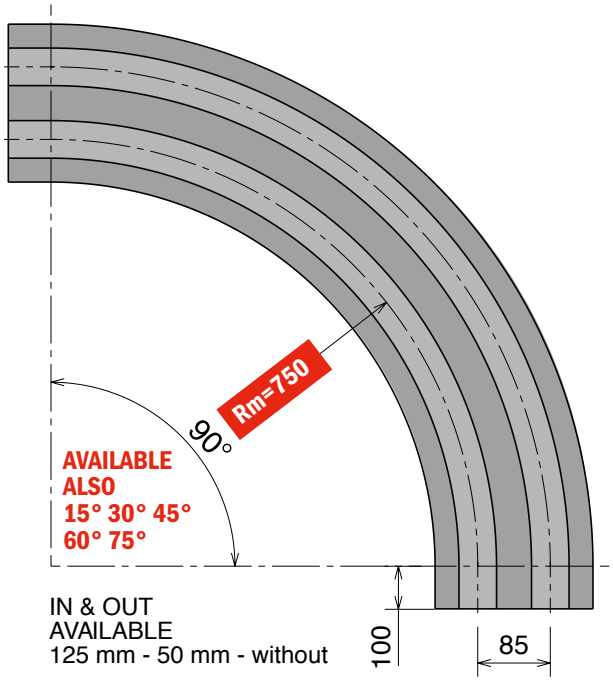

Available in BluLub®

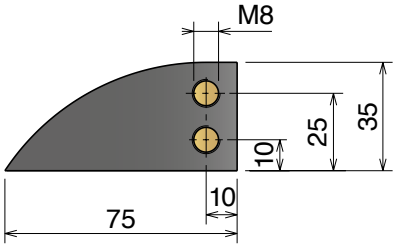

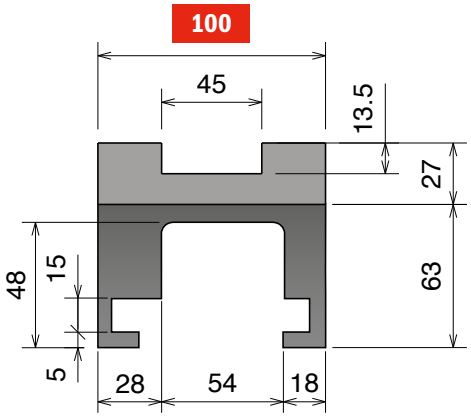

SINGLE TRACK

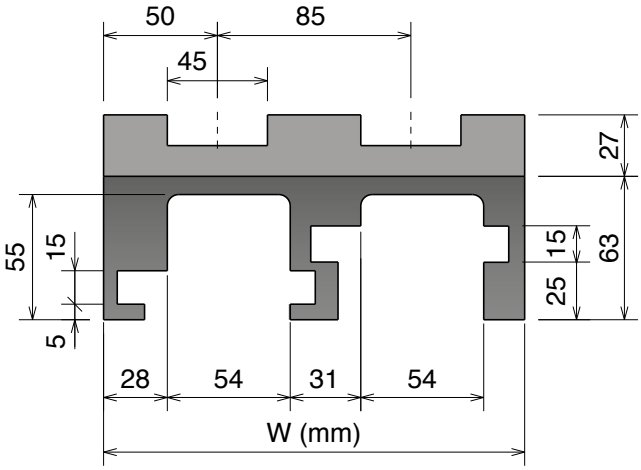

MULTI TRACK

MAGNETIC SYSTEM

Upper part available, on request, also in BluLub® and for abrasive applications.

Part	Article-Nr.	Tracks	W
706	**70616614**	1	100
706	**70616624**	2	185
706	**70616634**	3	270
706	**70616644**	4	355
706	**70616654**	5	440
706	**70616664**	6	525
706	**70616674**	7	610
706	**70616684**	8	695

Standard codes on table

add "**B**" for BluLub®

add "**C**" for abrasive

Part	Article-Nr.	Tracks	W
706	**70616614RS**	1	100
706	**70616624RS**	2	185
706	**70616634RS**	3	270
706	**70616644RS**	4	355
706	**70616654RS**	5	440
706	**70616664RS**	6	525
706	**70616674RS**	7	610
706	**70616684RS**	8	695

RS
add "**RS**" for RS-version

Materiale / *Material / Materialien:*
Polietilene UHMW-PE
Polyethylene UHMW-PE
Polyäthylen UHMW-PE

261 M MC5D Series

Chain Reference 261 M - K330

Curva Larghezza Base = 100 mm; Passo = 85 mm
Curve Basic Width = 100 mm; Pitch = 85 mm
Kurve Basisbreite = 100 mm; Teilung = 85 mm

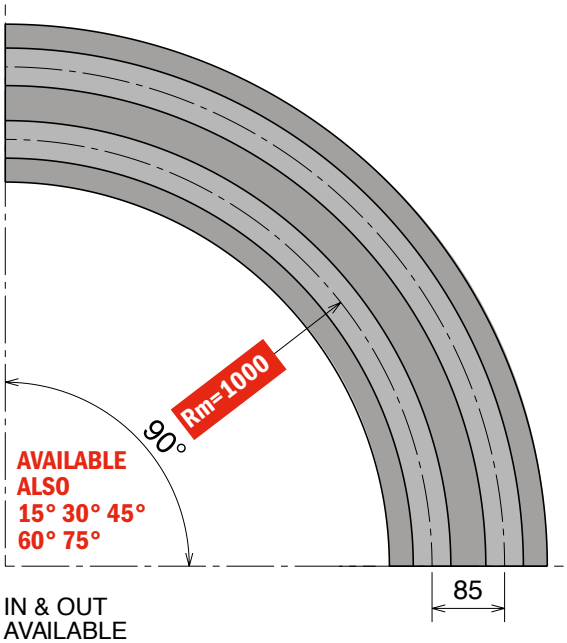

IN & OUT
AVAILABLE
125 mm - 100 mm - 50 mm

Available in BluLub®

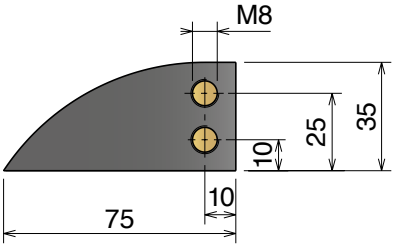

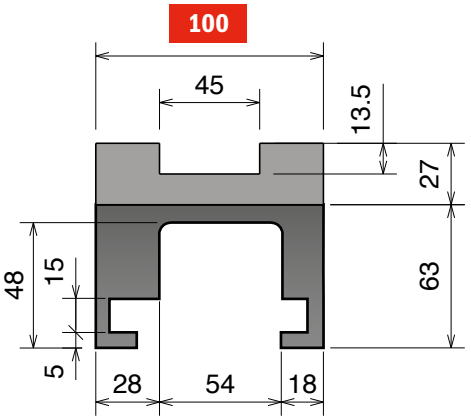

SINGLE TRACK

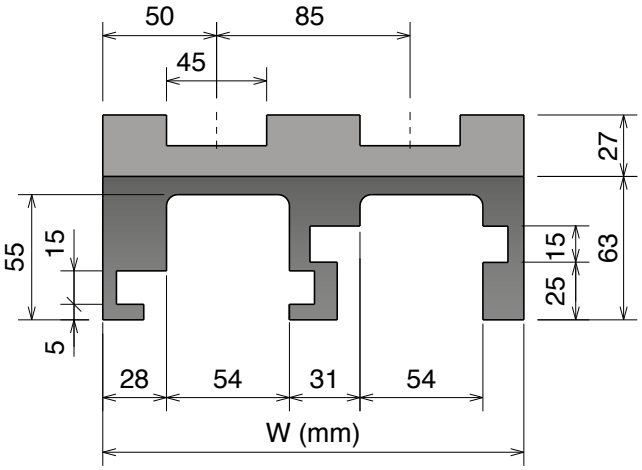

MULTI TRACK

MAGNETIC SYSTEM

Upper part available, on request, also in BluLub® and for abrasive applications.

Part	Article-Nr.	Tracks	W
706	70619610	1	100
706	70619620	2	185
706	70619630	3	270
706	70619640	4	355
706	70619650	5	440
706	70619660	6	525
706	70619670	7	610
706	70619680	8	695

Standard codes on table

add "**B**" for BluLub®

add "**C**" for abrasive

Part	Article-Nr.	Tracks	W
706	70619610RS	1	100
706	70619620RS	2	185
706	70619630RS	3	270
706	70619640RS	4	355
706	70619650RS	5	440
706	70619660RS	6	525
706	70619670RS	7	610
706	70619680RS	8	695

RS
add "**RS**" for RS-version

Oadby Core product range
Oadby Available from stock in Leicester
Easy Available from stock in Italy
Standard Produced to order in Italy

Movex®

261 M K450 *MC22 Series*

Chain Reference 261 M - K450

Curva Larghezza Base = 129 mm; Passo = 117 mm
Curve Basic Width = 129 mm; Pitch = 117 mm
Kurve Basisbreite = 129 mm; Teilung = 117 mm

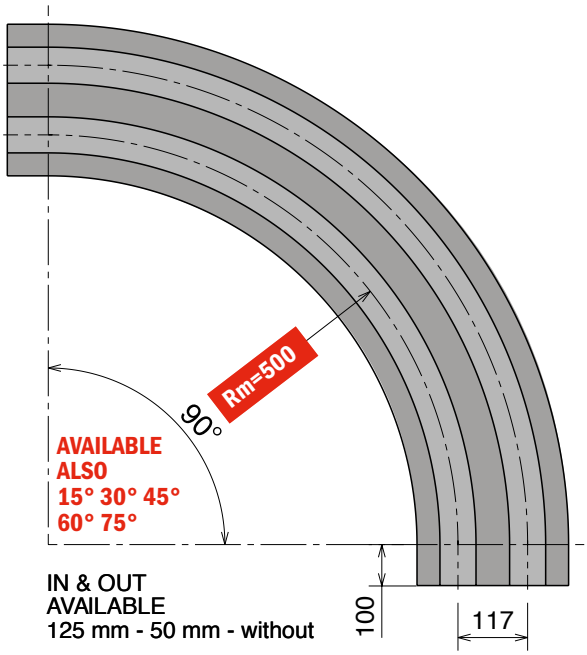

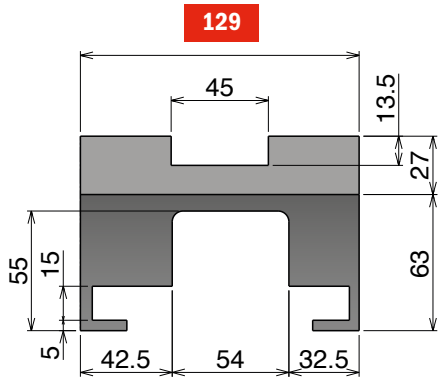

SINGLE TRACK

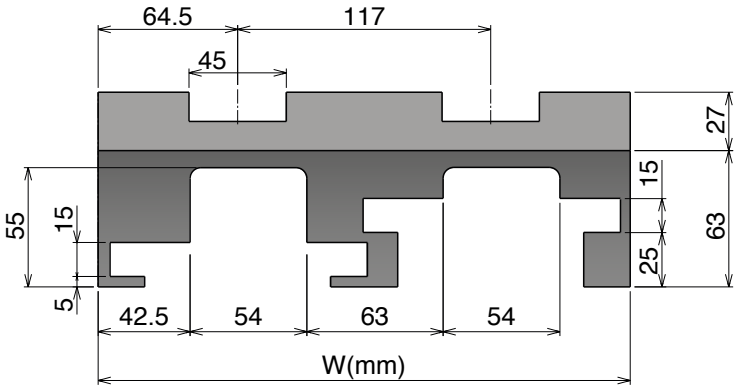

MULTI TRACK

Available in
BluLub®

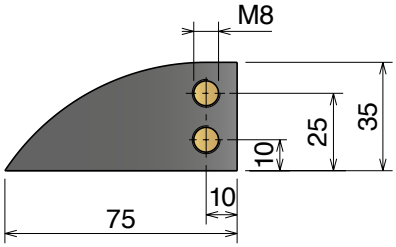

MAGNETIC SYSTEM

Upper part available, on request, also in BluLub® and for abrasive applications.

Part	Article-Nr.	Tracks	W	Material
736	**73611614**	1	129	
736	**73611624**	2	246	
736	**73611634**	3	363	
736	**73611644**	4	480	

Standard codes on table

add "**B**" for BluLub®

add "**C**" for abrasive

Part	Article-Nr.	Tracks	W	Material
736	**73611614RS**	1	129	
736	**73611624RS**	2	246	
736	**73611634RS**	3	363	
736	**73611644RS**	4	480	

RS
add "**RS**" for RS-version

Materiale / Material / Materialien:
Polietilene UHMW-PE
Polyethylene UHMW-PE
Polyäthylen UHMW-PE

261 M K450 MC27 Series

Chain Reference 261 M - K450

Curva Larghezza Base = 129 mm; Passo = 117 mm
Curve Basic Width = 129 mm; Pitch = 117 mm
Kurve Basisbreite = 129 mm; Teilung = 117 mm

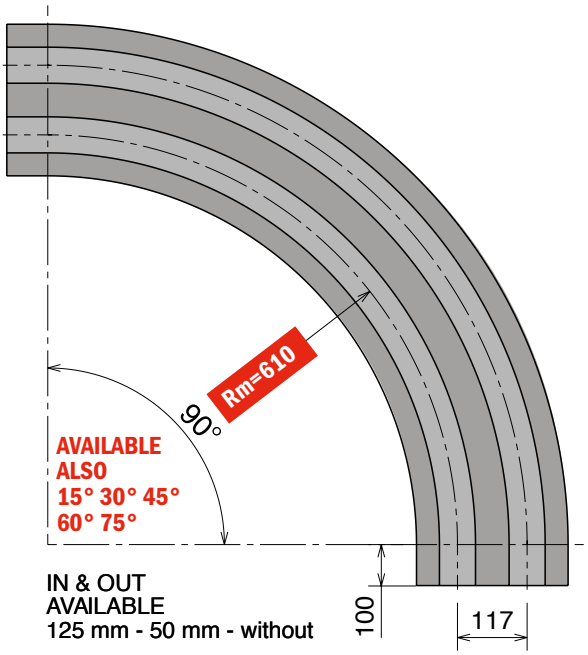

Available in BluLub®

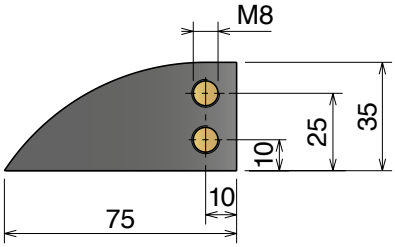

129

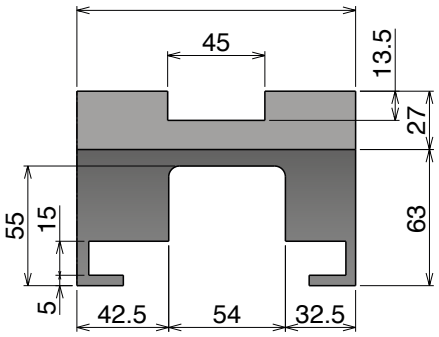

SINGLE TRACK

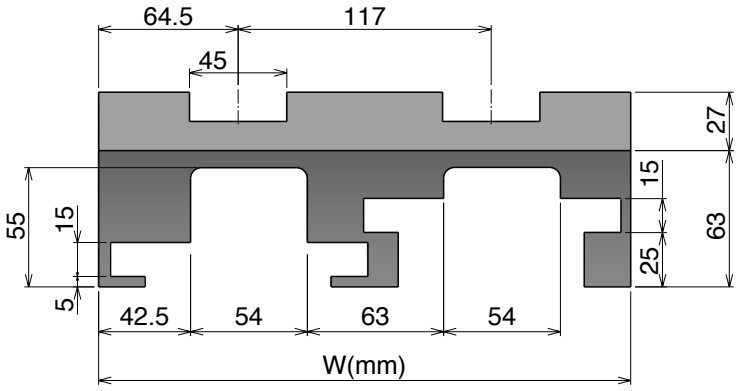

MULTI TRACK

MAGNETIC SYSTEM

Upper part available, on request, also in BluLub® and for abrasive applications.

Part	Article-Nr.	Tracks	W	Material
736	73613614	1	129	
736	73613624	2	246	
736	73613634	3	363	
736	73613644	4	480	

Standard codes on table

add "**B**" for BluLub®

add "**C**" for abrasive

Part	Article-Nr.	Tracks	W	Material
736	73613614RS	1	129	
736	73613624RS	2	246	
736	73613634RS	3	363	
736	73613644RS	4	480	

RS
add "**RS**" for RS-version

Oadby Core product range
Oadby Available from stock in Leicester
Easy Available from stock in Italy
Standard Produced to order in Italy

Movex®

520 M *MA7 Series*

Chain Reference 520 M - K330

Curva Larghezza Base = 100 mm; Passo = 85 mm
Curve Basic Width = 100 mm; Pitch = 85 mm
Kurve Basisbreite = 100 mm; Teilung = 85 mm

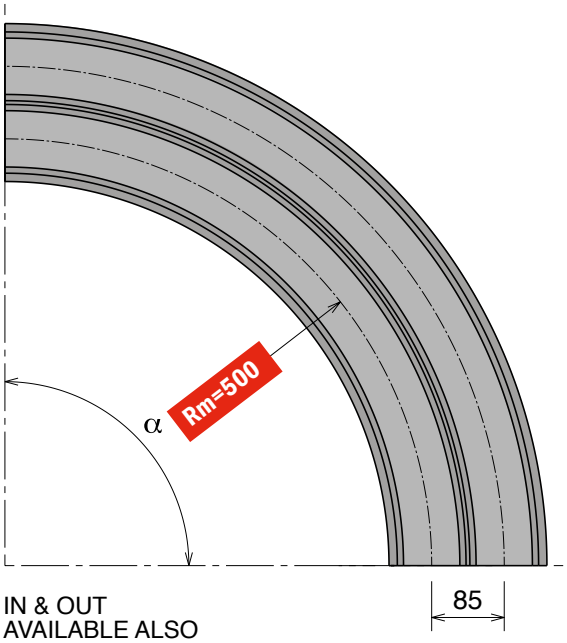

IN & OUT
AVAILABLE ALSO
125 mm - 100 mm - 50 mm

Available in BluLub®

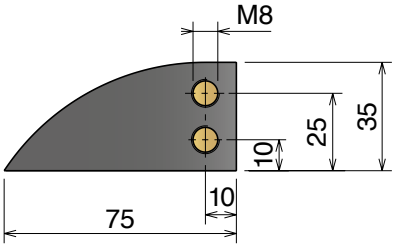

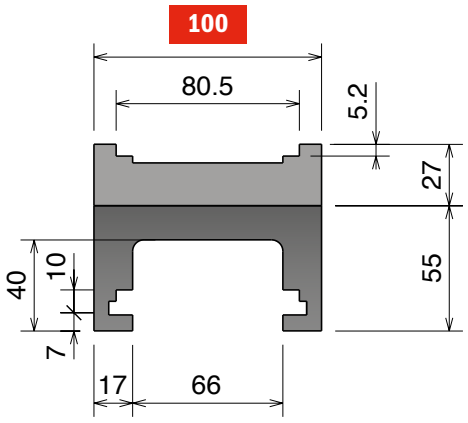

SINGLE TRACK

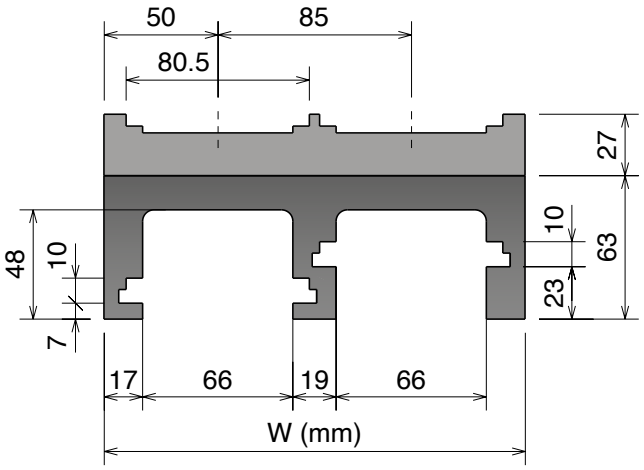

MULTI TRACK

MAGNETIC SYSTEM

Upper part available, on request, also in BluLub® and for abrasive applications.

Part	α 15°	α 30°	α 45°	α 60°	α 75°	α 90°	Tracks	W
750	75011110	75011210	75011310	75011410	75011510	75011610	1	100
750	75011120	75011220	75011320	75011420	75011520	75011620	2	185
750	75011130	75011230	75011330	75011430	75011530	75011630	3	270
750	75011140	75011240	75011340	75011440	75011540	75011640	4	355
750	75011150	75011250	75011350	75011450	75011550	75011650	5	440
750	75011160	75011260	75011360	75011460	75011560	75011660	6	525
750	75011170	75011270	75011370	75011470	75011570	75011670	7	610
750	75011180	75011280	75011380	75011480	75011580	75011680	8	695

Material	
	Standard codes on table
	add "**B**" for BluLub®
	add "**C**" for abrasive

Materiale / *Material / Materialien:*
Polietilene UHMW-PE
Polyethylene UHMW-PE
Polyäthylen UHMW-PE

520 M *MA6 Series*

Chain Reference 520 M - K330

Curva Larghezza Base = 100 mm; Passo = 85 mm
Curve Basic Width = 100 mm; Pitch = 85 mm
Kurve Basisbreite = 100 mm; Teilung = 85 mm

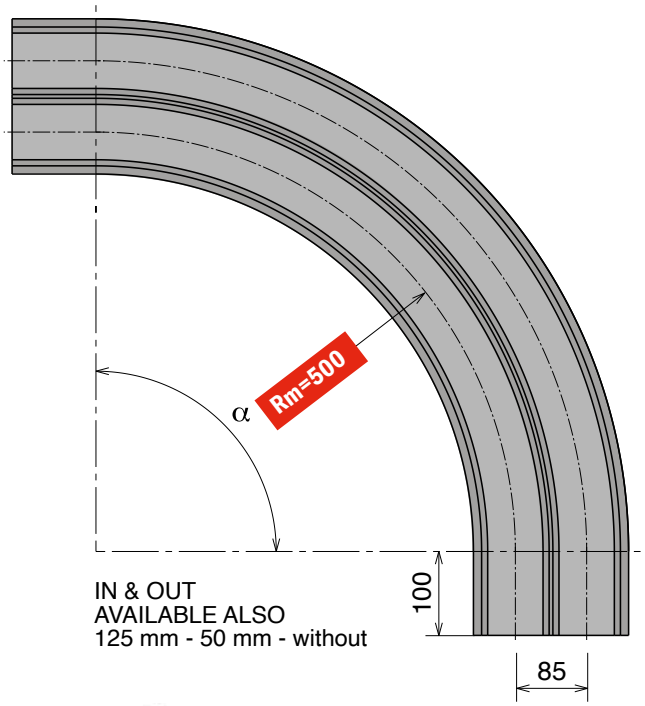

IN & OUT
AVAILABLE ALSO
125 mm - 50 mm - without

Available in BluLub®

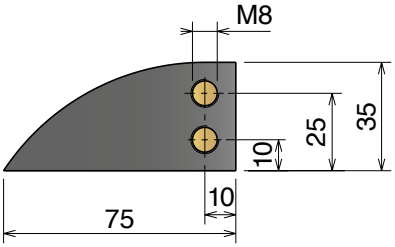

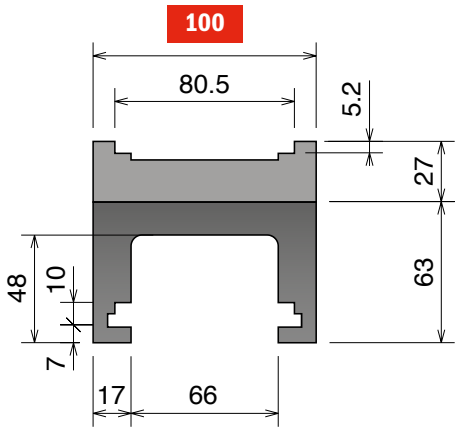

SINGLE TRACK

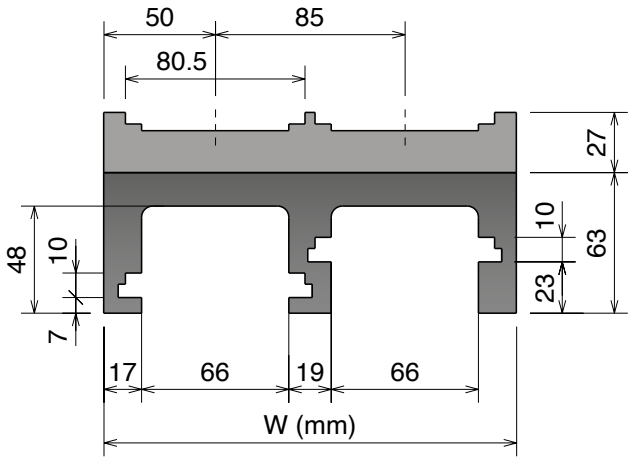

MULTI TRACK

MAGNETIC SYSTEM

Upper part available, on request, also in BluLub® and for abrasive applications.

Part	α 15°	α 30°	α 45°	α 60°	α 75°	α 90°	Tracks	W
750	75011114	75011214	75011314	75011414	75011514	75011614	1	100
750	75011124	75011224	75011324	75011424	75011524	75011624	2	185
750	75011134	75011234	75011334	75011434	75011534	75011634	3	270
750	75011144	75011244	75011344	75011444	75011544	75011644	4	355
750	75011154	75011254	75011354	75011454	75011554	75011654	5	440
750	75011164	75011264	75011364	75011464	75011564	75011664	6	525
750	75011174	75011274	75011374	75011474	75011574	75011674	7	610
750	75011184	75011284	75011384	75011484	75011584	75011684	8	695

Material	
	Standard codes on table
	add "**B**" for BluLub®
	add "**C**" for abrasive

Oadby Core product range
Oadby Available from stock in Leicester
Easy Available from stock in Italy
Standard Produced to order in Italy

Movex®

520 M *MA4 Series*

Chain Reference 520 M - K330

Curva Larghezza Base = 111mm; Passo = 85 mm
Curve Basic Width = 111 mm; Pitch = 85 mm
Kurve Basisbreite = 111 mm; Teilung = 85 mm

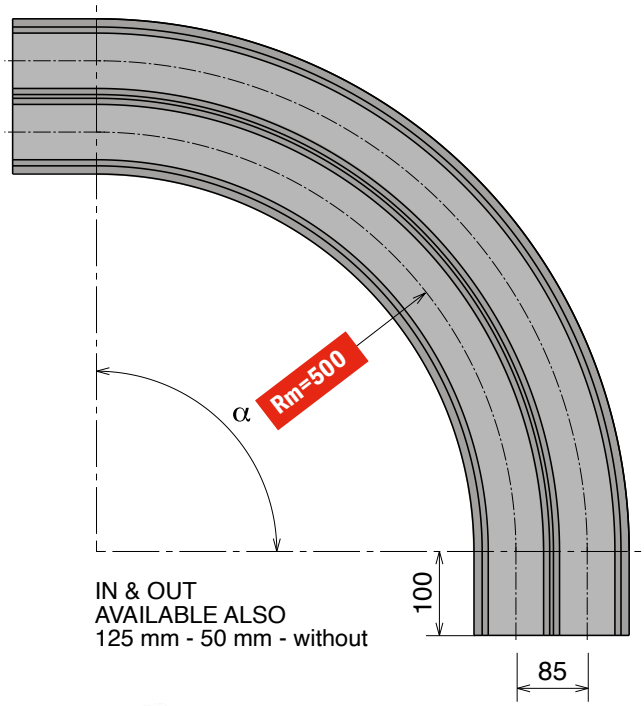

IN & OUT
AVAILABLE ALSO
125 mm - 50 mm - without

Available in
BluLub®

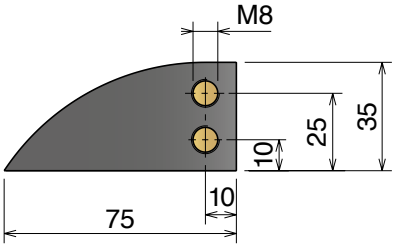

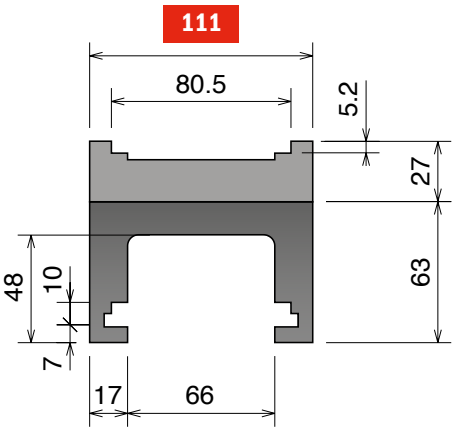

SINGLE TRACK

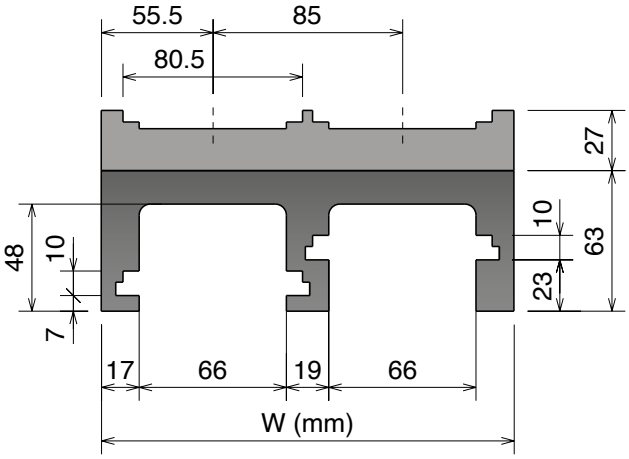

MULTI TRACK

MAGNETIC SYSTEM

Upper part available, on request, also in BluLub® and for abrasive applications.

Part	α 15°	α 30°	α 45°	α 60°	α 75°	α 90°	Tracks	W
751	75111114	75111214	75111314	75111414	75111514	75111614	1	111
751	75111124	75111224	75111324	75111424	75111524	75111624	2	196
751	75111134	75111234	75111334	75111434	75111534	75111634	3	281
751	75111144	75111244	75111344	75111444	75111544	75111644	4	366
751	75111154	75111254	75111354	75111454	75111554	75111654	5	451
751	75111164	75111264	75111364	75111464	75111564	75111664	6	536
751	75111174	75111274	75111374	75111474	75111574	75111674	7	621
751	75111184	75111284	75111384	75111484	75111584	75111684	8	706

Standard codes on table

add "**B**" for BluLub®

add "**C**" for abrasive

Materiale / *Material / Materialien:*
Polietilene UHMW-PE
Polyethylene UHMW-PE
Polyäthylen UHMW-PE

520 M *MA8 Series*

Chain Reference 520 M - K330

Curva Larghezza Base = 100 mm; Passo = 85 mm
Curve Basic Width = 100 mm; Pitch = 85 mm
Kurve Basisbreite = 100 mm; Teilung = 85 mm

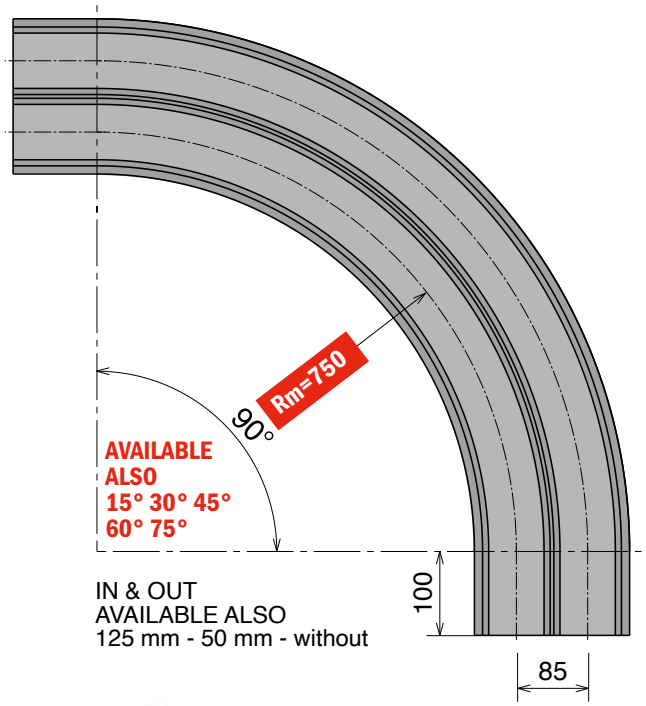

Available in BluLub®

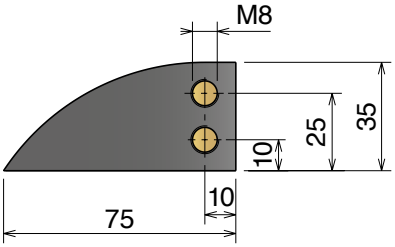

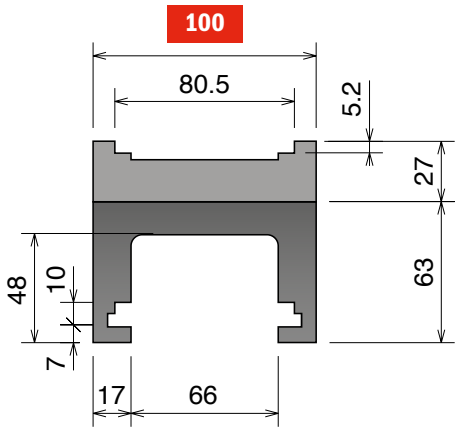

SINGLE TRACK

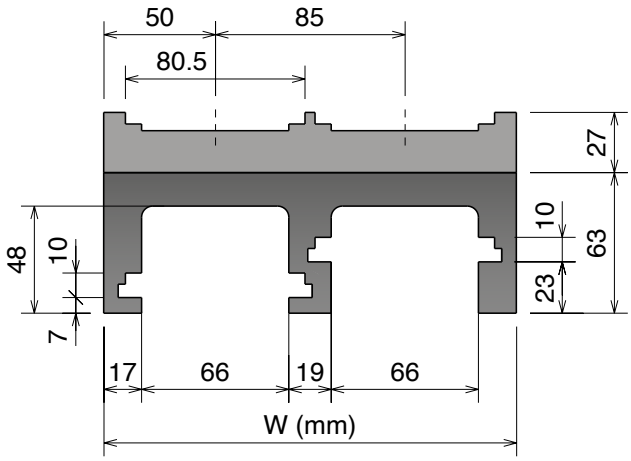

MULTI TRACK

MAGNETIC SYSTEM

Upper part available, on request, also in BluLub® and for abrasive applications.

Part	Article-Nr.	Tracks	W
750	75016614	1	100
750	75016624	2	185
750	75016634	3	270
750	75016644	4	355
750	75016654	5	440
750	75016664	6	525
750	75016674	7	610
750	75016684	8	695

Standard codes on table

add "**B**" for BluLub®

add "**C**" for abrasive

Oadby Core product range
Oadby Available from stock in Leicester
Easy Available from stock in Italy
Standard Produced to order in Italy

Movex®

520 M *MA42 Series*

Chain Reference 520 M - K330

Curva Larghezza Base = 111 mm; Passo = 85 mm
Curve Basic Width = 111 mm; Pitch = 85 mm
Kurve Basisbreite = 111 mm; Teilung = 85 mm

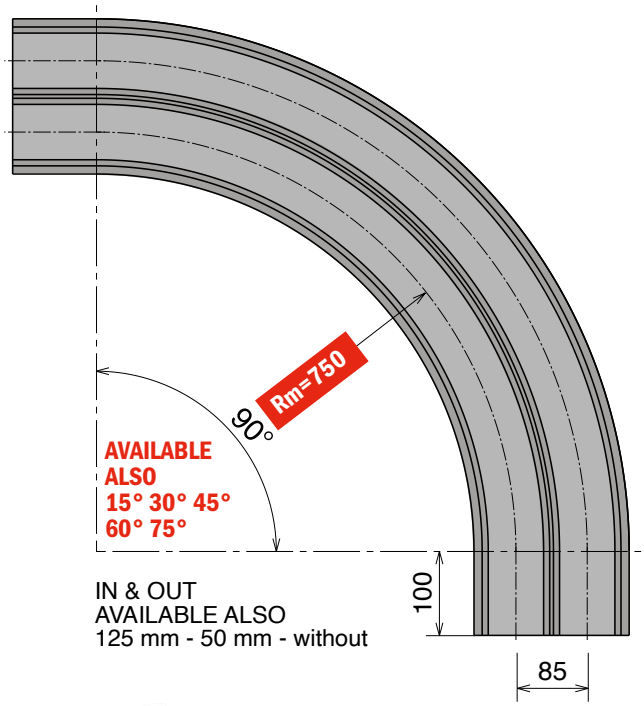

Available in BluLub®

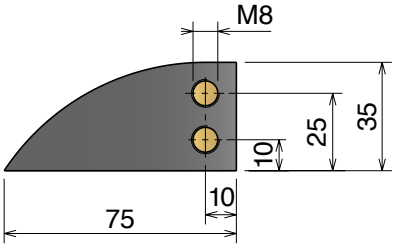

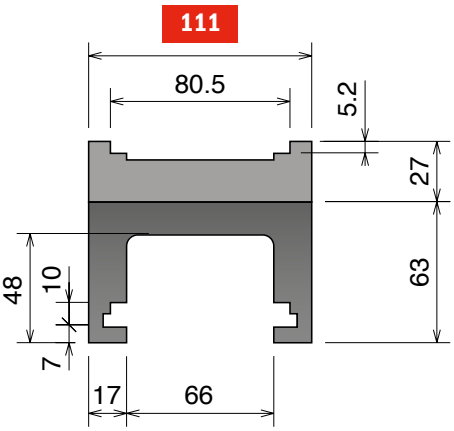

SINGLE TRACK

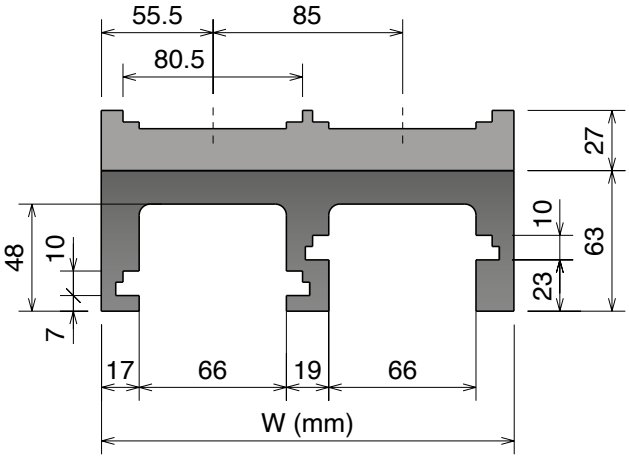

MULTI TRACK

MAGNETIC SYSTEM

Upper part available, on request, also in BluLub® and for abrasive applications.

Part	Article-Nr.	Tracks	W	Material
751	**75116614**	1	111	
751	**75116624**	2	196	
751	**75116634**	3	281	
751	**75116644**	4	366	
751	**75116654**	5	451	
751	**75116664**	6	536	
751	**75116674**	7	621	
751	**75116684**	8	706	

Standard codes on table

add "**B**" for BluLub®

add "**C**" for abrasive

Materiale / *Material / Materialien:*
Polietilene UHMW-PE
Polyethylene UHMW-PE
Polyäthylen UHMW-PE

520 M *MA43 Series*

Chain Reference 520 M - K330

Curva Larghezza Base = 111 mm; Passo = 85 mm
Curve Basic Width = 111 mm; Pitch = 85 mm
Kurve Basisbreite = 111 mm; Teilung = 85 mm

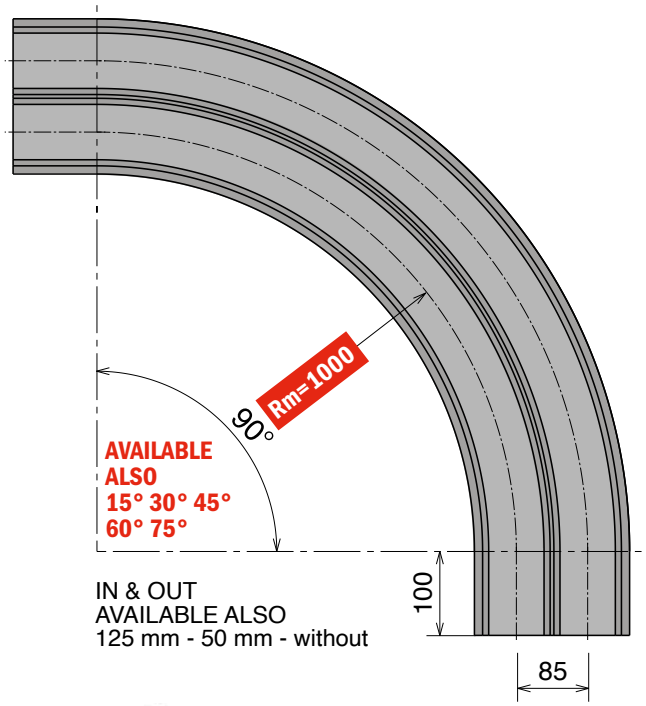

Available in BluLub®

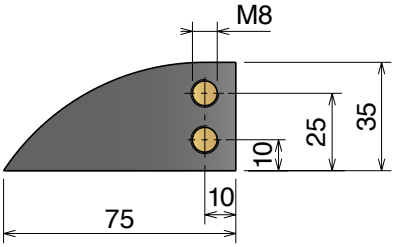

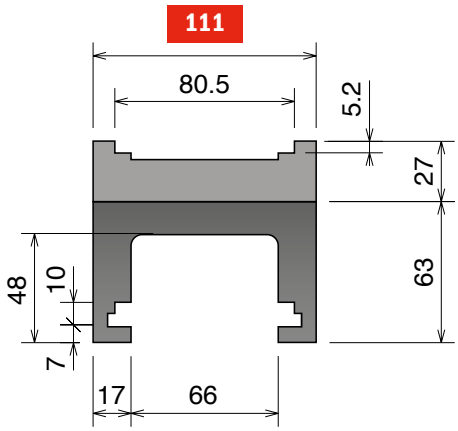

SINGLE TRACK

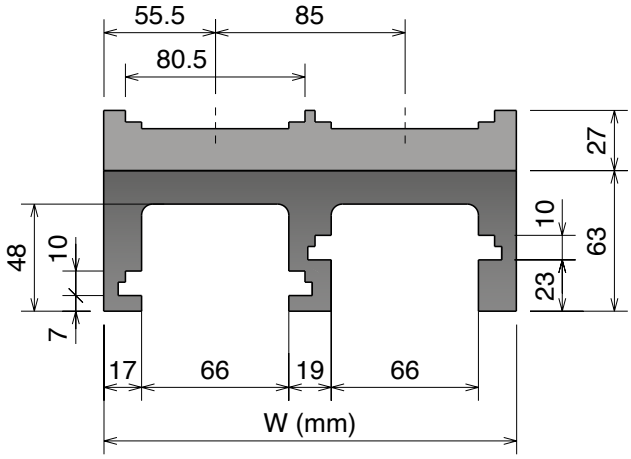

MULTI TRACK

MAGNETIC SYSTEM

Upper part available, on request, also in BluLub® and for abrasive applications.

Part	Article-Nr.	Tracks	W	Material
751	75119614	1	111	
751	75119624	2	196	
751	75119634	3	281	
751	75119644	4	366	
751	75119654	5	451	
751	75119664	6	536	
751	75119674	7	621	
751	75119684	8	706	

Standard codes on table

add "**B**" for BluLub®

add "**C**" for abrasive

Oadby Core product range
Oadby Available from stock in Leicester
Easy Available from stock in Italy
Standard Produced to order in Italy

Movex®

520 M *MA5D Series*

Chain Reference 520 M - K330

Curva Larghezza Base = 100 mm; Passo = 85 mm
Curve Basic Width = 100 mm; Pitch = 85 mm
Kurve Basisbreite = 100 mm; Teilung = 85 mm

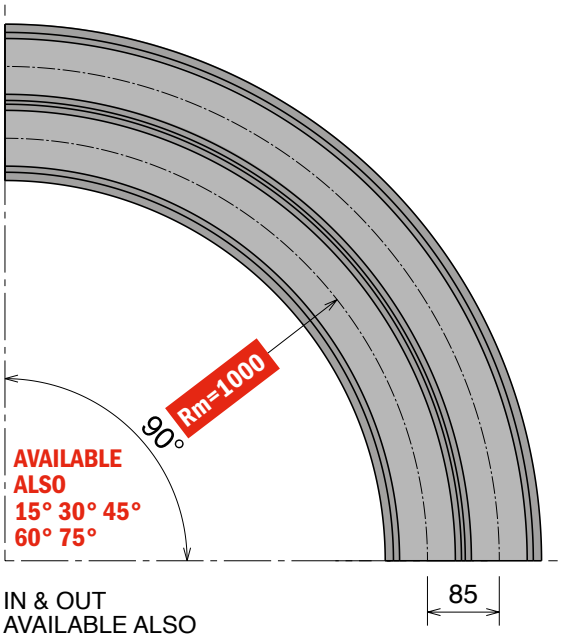

IN & OUT
AVAILABLE ALSO
125 mm - 100 mm - 50 mm

Available in BluLub®

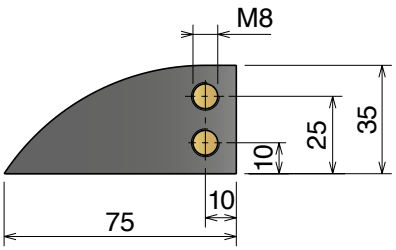

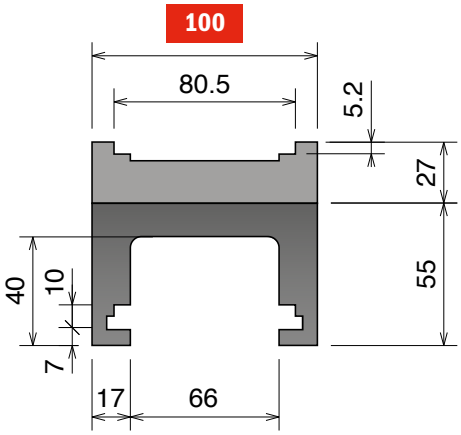

SINGLE TRACK

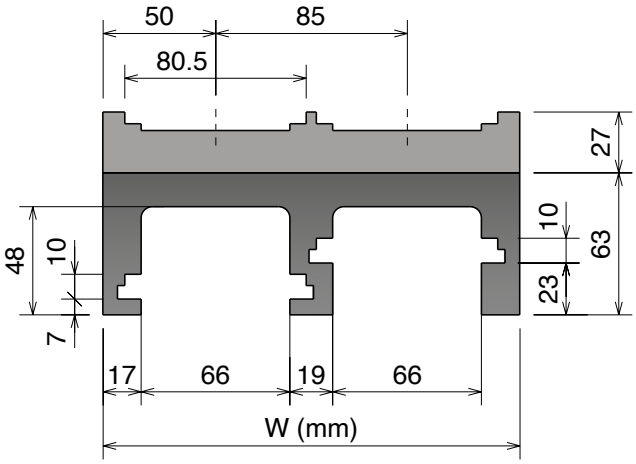

MULTI TRACK

MAGNETIC SYSTEM

Upper part available, on request, also in BluLub® and for abrasive applications.

Part	Article-Nr.	Tracks	W	Material
750	**75019610**	1	100	
750	**75019620**	2	185	
750	**75019630**	3	270	
750	**75019640**	4	355	
750	**75019650**	5	440	
750	**75019660**	6	525	
750	**75019670**	7	610	
750	**75019680**	8	695	

Standard codes on table

add "**B**" for BluLub®

add "**C**" for abrasive

Materiale / *Material / Materialien:*
Polietilene UHMW-PE
Polyethylene UHMW-PE
Polyäthylen UHMW-PE

550 *PRO* M

Chain Reference 550 PRO M - K330

Curva Larghezza Base = 100 mm; Passo = 85 mm
Curve Basic Width = 100 mm; Pitch = 85 mm
Kurve Basisbreite = 100 mm; Teilung = 85 mm

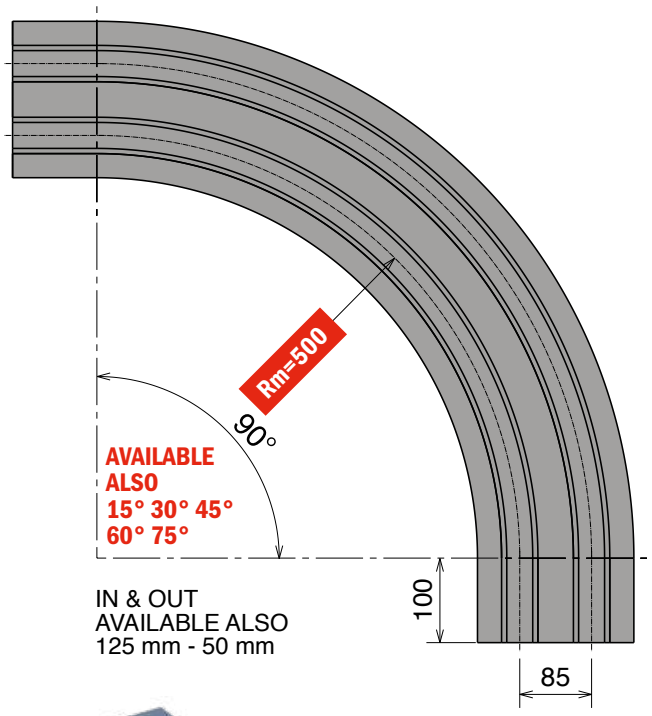

Available in BluLub®

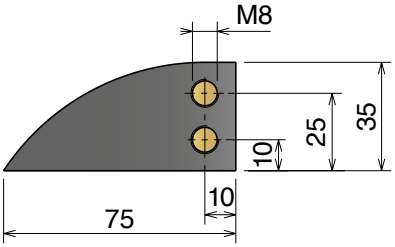

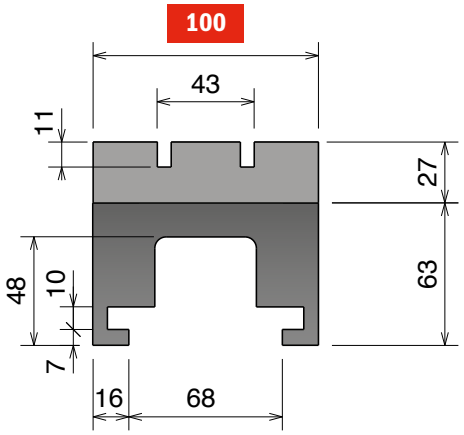

SINGLE TRACK

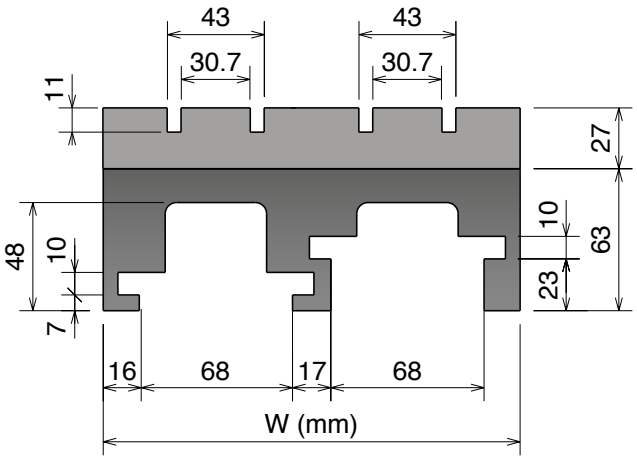

MULTI TRACK

MAGNETIC SYSTEM

Upper part available, on request, also in BluLub® and for abrasive applications.

Part	α 90°	Tracks	W	Material
752	75211614	1	100	
752	75211624	2	185	
752	75211634	3	270	
752	75211644	4	355	
752	75211654	5	440	
752	75211664	6	525	
752	75211674	7	610	
752	75211684	8	695	

Standard codes on table

add "**B**" for BluLub®

add "**C**" for abrasive

Part	α 90°	Tracks	W	Material
752	75211614RS	1	100	
752	75211624RS	2	185	
752	75211634RS	3	270	
752	75211644RS	4	355	
752	75211654RS	5	440	
752	75211664RS	6	525	
752	75211674RS	7	610	
752	75211684RS	8	695	

RS
add "**RS**" for RS-version

878-879-880-881-888-260-261 TAB

Chain Reference	878-879 TAB - K325/K450	880-881 TAB - K325/K450/K750	8881 TAB - K325/K330/K450/K750	888 TAB - W80/140/200	260-261 TAB - K330/K450

Supply: Set of 2 pieces (upper & return)

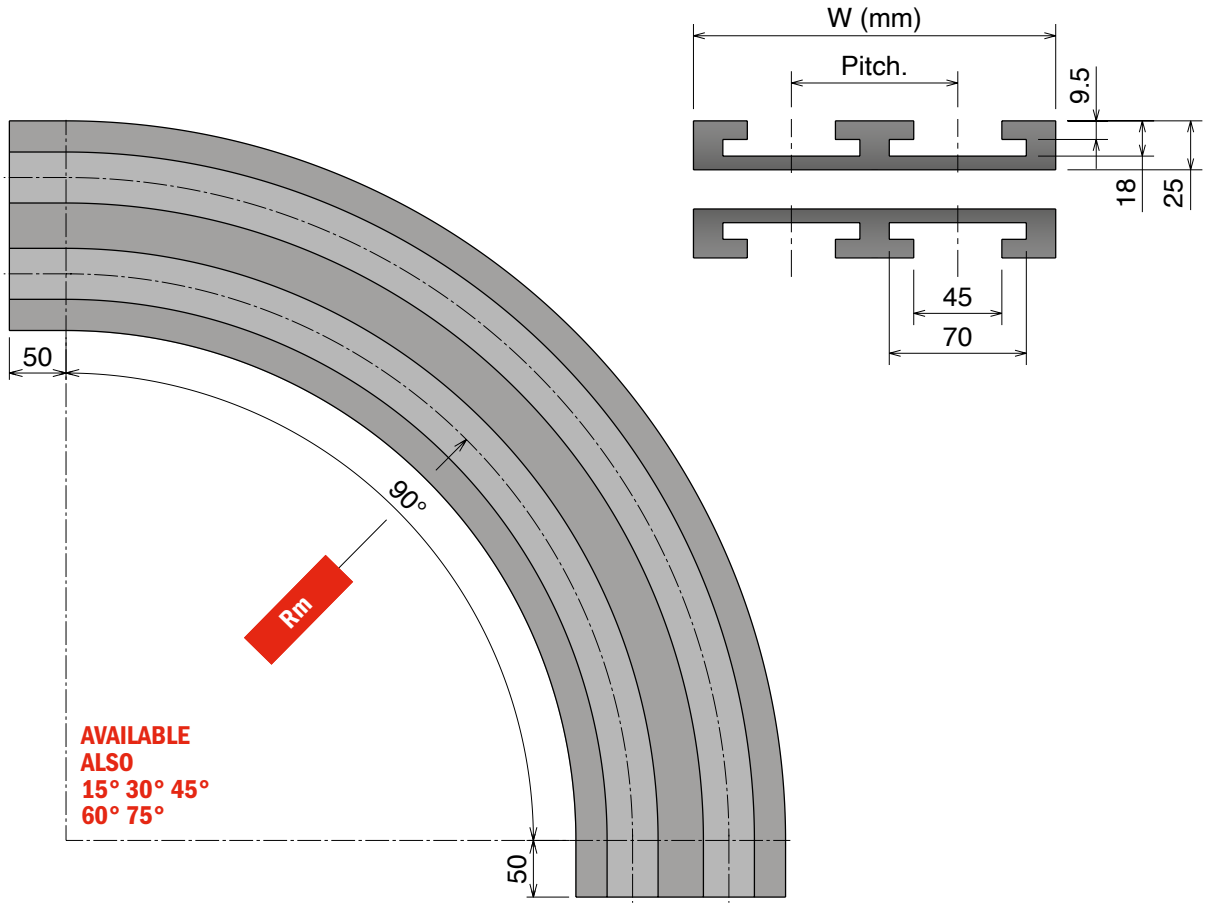

TAB SYSTEM

Upper part available, on request, also in BluLub® and for abrasive applications.

Part	Rm 500	Rm 610	Rm 800	Rm 1000	Tracks	W	Pitch	Material
K325								
Oadby 720	72021612	Oadby 72023612	72027612	72029612	1	100	85	
720	72021622	72023622	72027622	72029622	2	185		
720	72021632	72023632	72027632	72029632	3	270		
720	72021642	72023642	72027642	72029642	4	355		
720	72021652	72023652	72027652	72029652	5	440		
720	72021662	72023662	72027662	72029662	6	525		
K450								
721	72121612	72123612	72127612	72129612	1	130	120	
721	72121622	72123622	72127622	72129622	2	250		
721	72121632	72123632	72127632	72129632	3	370		
721	72121642	72123642	72127642	72129642	4	490		
721	72121652	72123652	72127652	72129652	5	610		
721	72121662	72123662	72127662	72129662	6	730		
K750								
722	72221612	72223612	72227612	72229612	1	200	195	
722	72221622	72223622	72227622	72229622	2	395		
722	72221632	72223632	72227632	72229632	3	590		
722	72221642	72223642	72227642	72229642	4	785		

Standard codes on table

Upper part:

add "**B**" for BluLub®

add "**C**" for abrasive

Upper and return part:

add "**BB**" for BluLub®

add "**CC**" for abrasive

Materiale / *Material / Materialien:*
Polietilene UHMW-PE
Polyethylene UHMW-PE
Polyäthylen UHMW-PE

NEW 878 TAB - 880 TAB BO

Chain Reference	878 TAB - K325/K450	880 TAB BO - K325/K450

Supply: Set of 2 pieces (upper & return)

pg. 103

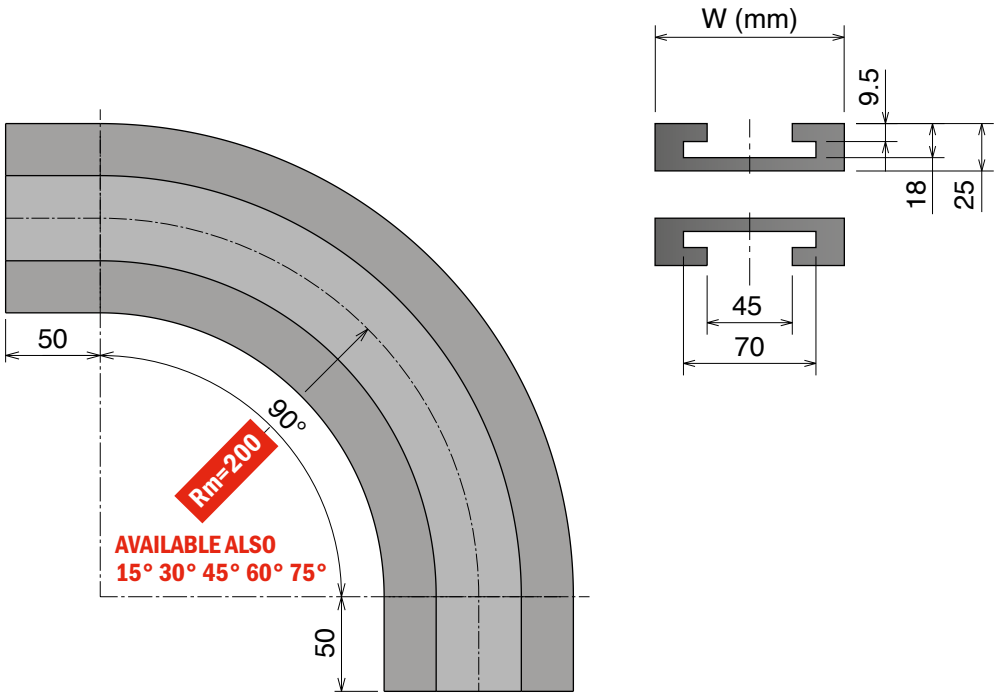

TAB SYSTEM

Upper part available, on request, also in BluLub® and for abrasive applications.

BluLub® *Strongly recommended*

Part	Rm 200	Tracks	W	Material
K325				
744	**74420612**	1	100	**Standard** codes on table
K450				
745	**74520612**	1	130	

Upper part:
add "**B**" for BluLub®
add "**C**" for abrasive

Upper and return part:
add "**BB**" for BluLub®
add "**CC**" for abrasive

Oadby Core product range
Oadby Available from stock in Leicester
Easy Available from stock in Italy
Standard Produced to order in Italy

Movex®

NEW 888 TAB

Chain Reference | **888 TAB - W80/140/200** | **Delivery:** Easy | Standard

Supply: Set of 2 pieces (upper & return)

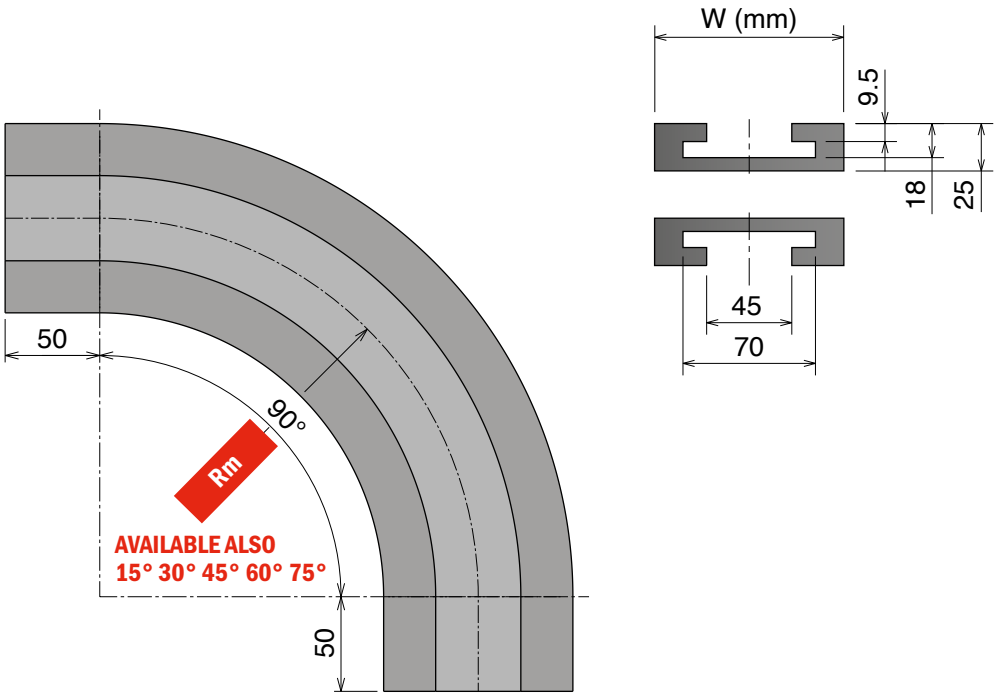

TAB SYSTEM

Upper part available, on request, also in BluLub® and for abrasive applications.

BEST CHOICE **BluLub®** *Strongly recommended*

Part	Rm 200	Rm 500	Tracks	W	Material
W80					
744	74420612	72021612	1	100	
W140					
746	-	74621612	1	155	
W200					
747	-	74721612	1	215	

Standard codes on table

Upper part:

add "**B**" for BluLub®

add "**C**" for abrasive

Upper and return part:

add "**BB**" for BluLub®

add "**CC**" for abrasive

Materiale / *Material / Materialien:*
Polietilene UHMW-PE
Polyethylene UHMW-PE
Polyäthylen UHMW-PE

882 TAB

Chain Reference | **882 TAB - K450/K750/K1000/K1200** | **Delivery:** Easy | Standard

Supply: Set of 2 pieces (upper & return)

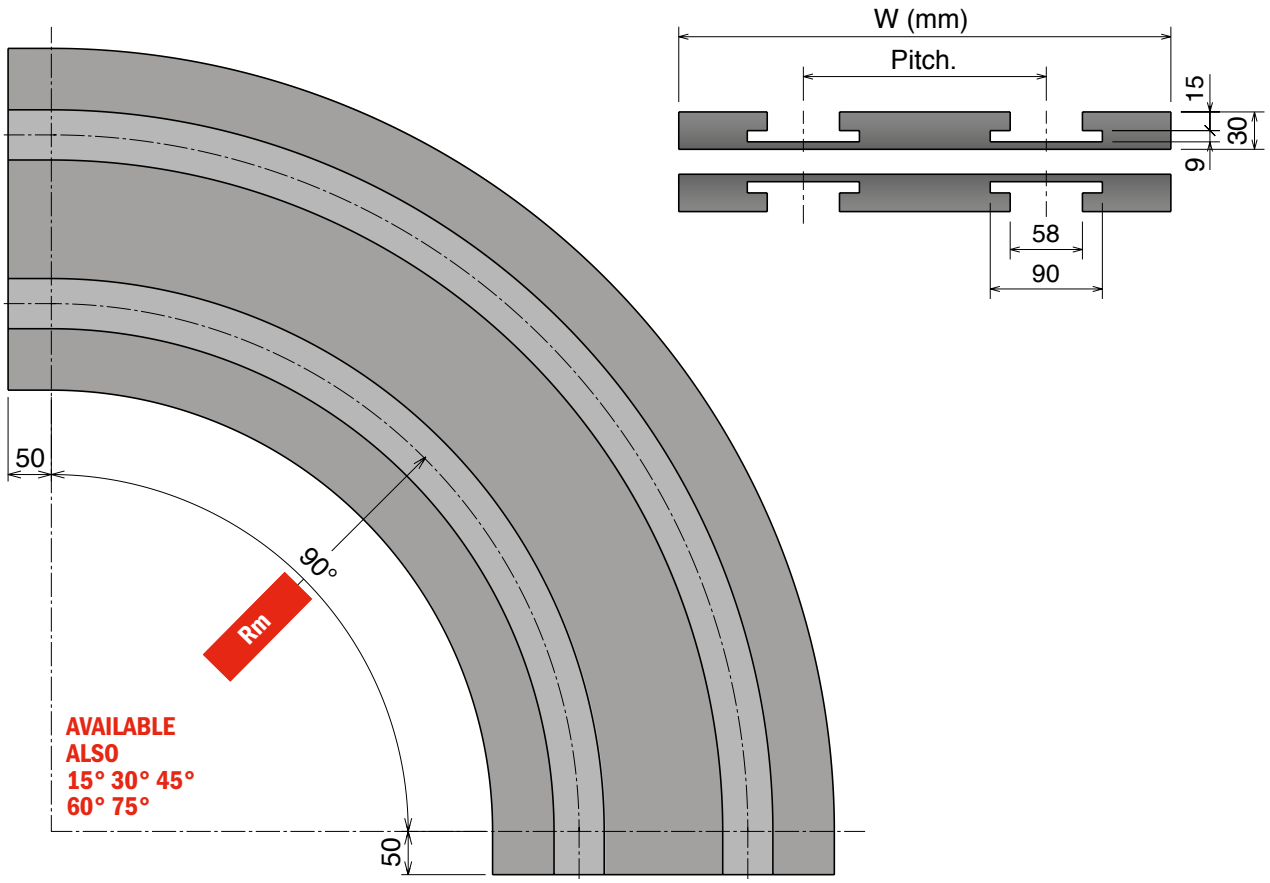

TAB SYSTEM

Upper part available, on request, also in BluLub® and for abrasive applications.

Part	Rm 610	Rm 800	Rm 1000	Tracks	W	Pitch	Material
K450							
727	72723612	72727612	72729612	1	130	120	
727	72723622	72727622	72729622	2	250		
727	72723632	72727632	72729632	3	370		
727	72723642	72727642	72729642	4	490		
K750							
723	72323612	72327612	72329612	1	200	195	
723	72323622	72327622	72329622	2	395		
723	72323632	72327632	72329632	3	590		
723	72323642	72327642	72329642	4	785		
K1000							
724	72423612	72427612	72429612	1	270	260	
724	72423622	72427622	72429622	2	530		
724	72423632	72427632	72429632	3	790		
724	72423642	72427642	72429642	4	1050		
K1200							
725	72523612	72527612	72529612	1	320	310	
725	72523622	72527622	72529622	2	630		
725	72523632	72527632	72529632	3	940		
725	72523642	72527642	72529642	4	1250		

Standard codes on table

Upper part:

add "**B**" for BluLub®

add "**C**" for abrasive

Upper and return part:

add "**BB**" for BluLub®

add "**CC**" for abrasive

Oadby Core product range
Oadby Available from stock in Leicester | Easy Available from stock in Italy | Standard Produced to order in Italy

Movex®

1873-1874 TAB

Chain Reference 1873 TAB-1874 TAB - K325/K450/K600/K750/K1000/K1200

Supply: Set of 2 pieces (upper & return)

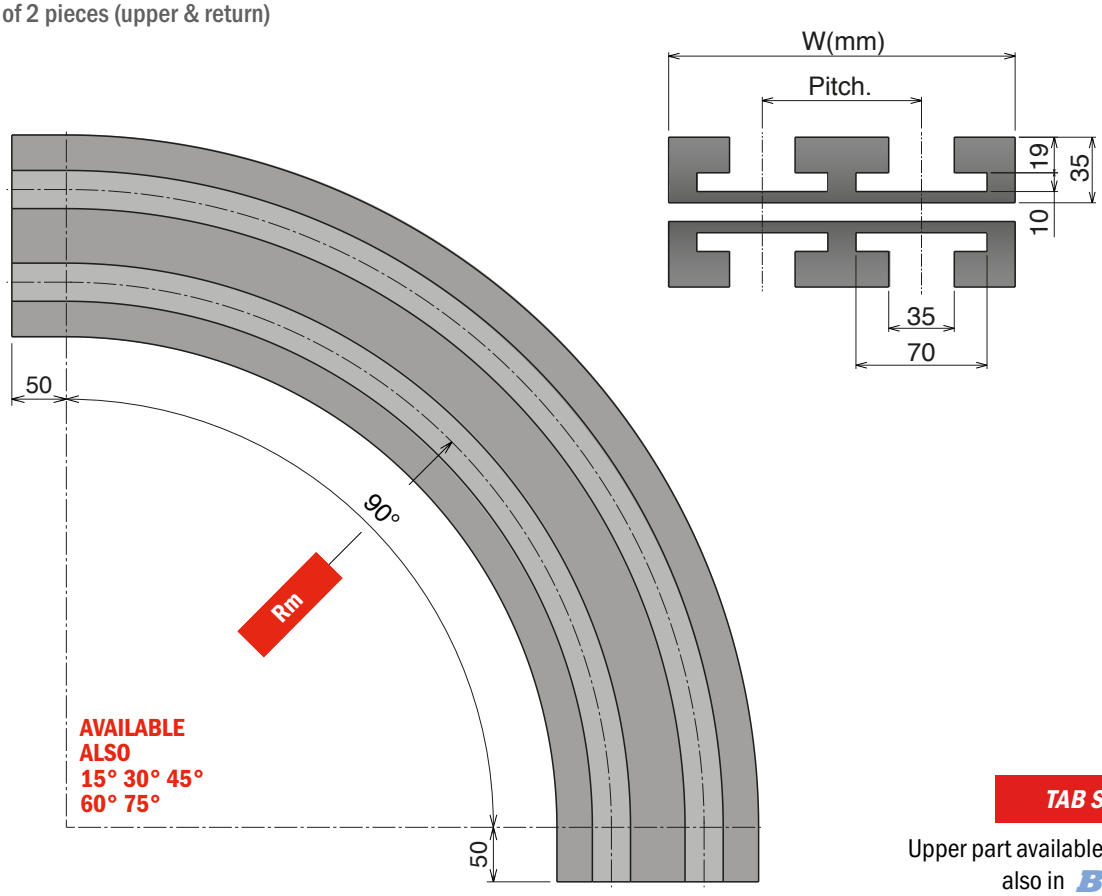

TAB SYSTEM

Upper part available, on request, also in BluLub® and for abrasive applications.

Part	Rm 500	Rm 610	Rm 800	Rm 1000	Tracks	W	Pitch
K325							
726	72621612	72623612	72627612	72629612	1	100	85
726	72621622	72623622	72627622	72629622	2	185	
726	72621632	72623632	72627632	72629632	3	270	
726	72621642	72623642	72627642	72629642	4	355	
K450							
728	72821612	72823612	72827612	72829612	1	130	120
728	72821622	72823622	72827622	72829622	2	250	
728	72821632	72823632	72827632	72829632	3	370	
728	72821642	72823642	72827642	72829642	4	490	
K600							
729	72921612	72923612	72927612	72929612	1	170	160
729	72921622	72923622	72927622	72929622	2	330	
729	72921632	72923632	72927632	72929632	3	490	
729	72921642	72923642	72927642	72929642	4	650	
K750							
737	73721612	73723612	73727612	73729612	1	200	195
737	73721622	73723622	73727622	73729622	2	395	
737	73721632	73723632	73727632	73729632	3	590	
737	73721642	73723642	73727642	73729642	4	785	
K1000							
738	73821612	73823612	73827612	73829612	1	270	260
738	73821622	73823622	73827622	73829622	2	530	
K1200							
739	73921612	73923612	73927612	73929612	1	320	310
739	73921622	73923622	73927622	73929622	2	630	

Standard codes on table

Upper part:

add "**B**" for BluLub®

add "**C**" for abrasive

Upper and return part:

add "**BB**" for BluLub®

add "**CC**" for abrasive

Materiale / *Material / Materialien:*
Polietilene UHMW-PE
Polyethylene UHMW-PE
Polyäthylen UHMW-PE

1843 TAB

Chain Reference 1843 TAB - K125/K200

Supply: Set of 2 pieces (upper & return)

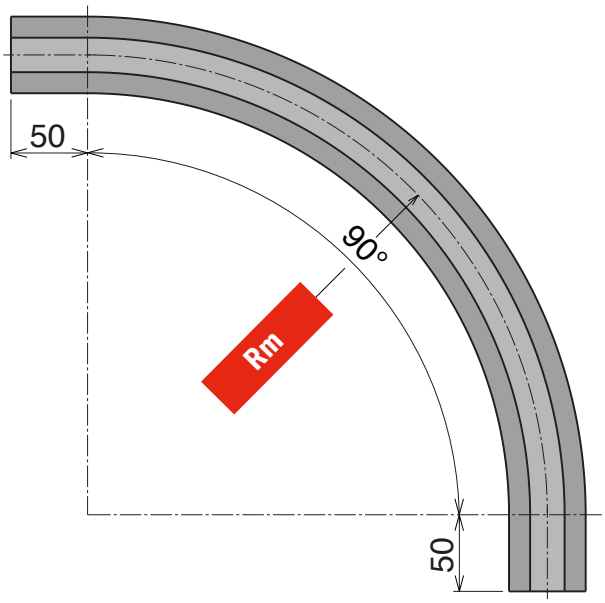

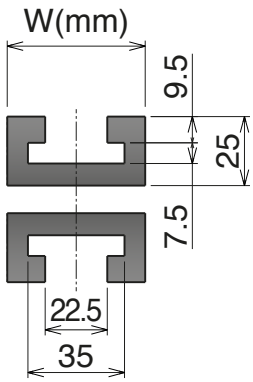

TAB SYSTEM

Upper part available, on request, also in BluLub® and for abrasive applications.

Part	Rm 300	Rm 500	Tracks	W	Material
K125					
740	**74020612**	**74021612**	1	50	
K200					
741	**74120612**	**74121612**	1	70	

Standard codes on table

Upper part:

add "**B**" for BluLub®

add "**C**" for abrasive

Upper and return part:

add "**BB**" for BluLub®

add "**CC**" for abrasive

Oadby Core product range
Oadby Available from stock in Leicester
Easy Available from stock in Italy
Standard Produced to order in Italy

Movex®

1701 TAB-1706 TAB

Chain Reference 1701 TAB - 1701 TAB OP - 1701 TAB OPF - 1706 TAB - K55

Supply: Set of 2 pieces (upper & return)

pg. 104/105

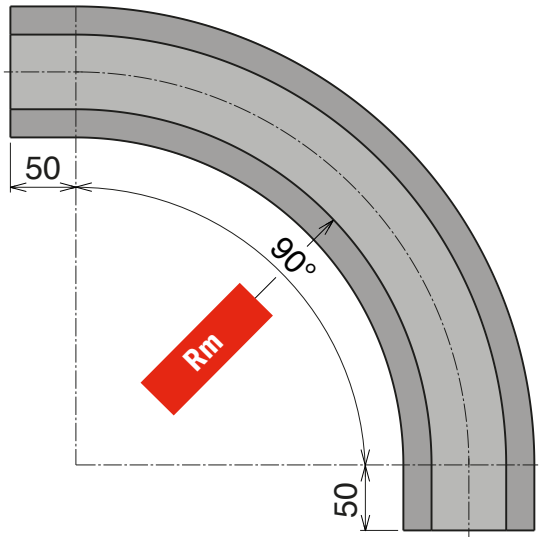

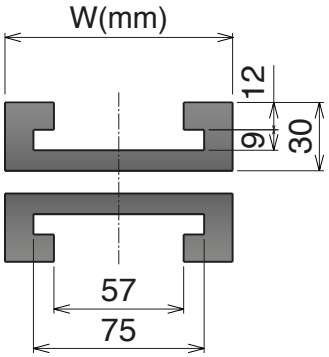

TAB SYSTEM

Upper part available, on request, also in BluLub® and for abrasive applications.

Part	Rm 250	Rm 500	Tracks	W	Material
K55					
742	**74220612**	**74221612**	1	100	

Standard codes on table

Upper part:

add "**B**" for BluLub®

add "**C**" for abrasive

Upper and return part:

add "**BB**" for BluLub®

add "**CC**" for abrasive

Materiale / Material / Materialien:
Polietilene UHMW-PE
Polyethylene UHMW-PE
Polyäthylen UHMW-PE

NEW 600 Standard and Small radius

Belt Reference	600 Standard	600 Small radius

Supply: Set of 2 pieces (upper & return)

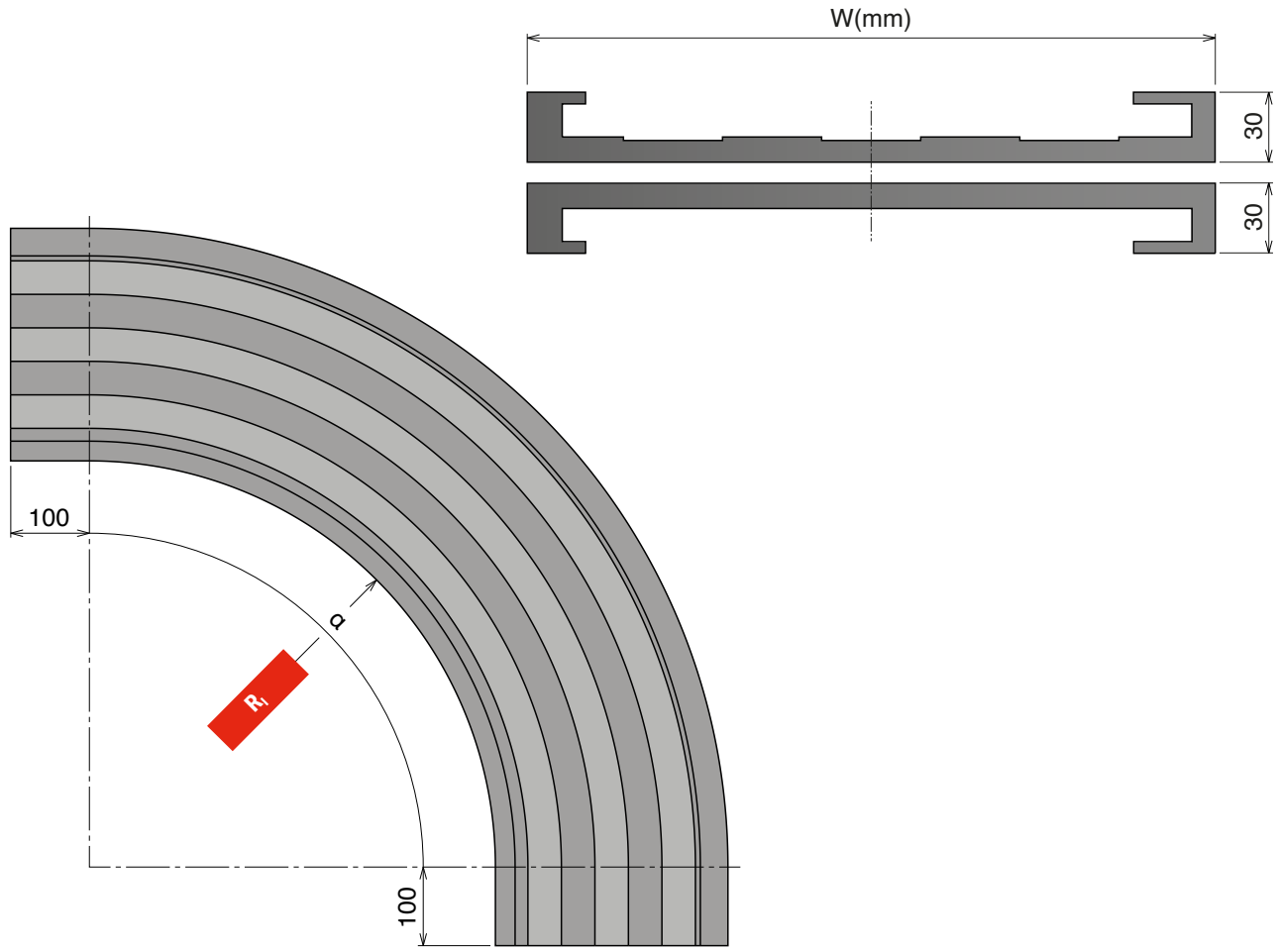

Upper part available, on request,
also in BluLub®
add "**B**" at the end of the code

600 Standard

Part	α 15°	α 30°	α 45°	α 60°	α 75°	α 90°	Curve radius R_I	Curve width W	Min. belt radius R_B	Belt width W_B
760	76041114	76041214	76041314	76041414	76041514	76041614	515	295	510	255
760	76042124	76042224	76042324	76042424	76042524	76042624	685	380	680	340
760	76043134	76043234	76043334	76043434	76043534	76043634	855	465	850	425
760	76044144	76044244	76044344	76044444	76044544	76044644	1025	550	1020	510
760	76045154	76045254	76045354	76045454	76045554	76045654	1195	635	1190	595
760	76046164	76046264	76046364	76046464	76046564	76046664	1365	720	1360	680
760	76047174	76047274	76047374	76047474	76047574	76047674	1535	805	1530	765
760	76048184	76048284	76048384	76048484	76048584	76048684	1705	890	1700	850

600 Small radius

Part	α 15°	α 30°	α 45°	α 60°	α 75°	α 90°	Curve radius R_I	Curve width W	Min. belt radius R_B	Belt width W_B
760	76051124	76051224	76051324	76051424	76051524	76051624	405	380	400	340
760	76052134	76052234	76052334	76052434	76052534	76052634	505	465	500	425
760	76053144	76053244	76053344	76053444	76053544	76053644	605	550	600	510
760	76054154	76054254	76054354	76054454	76054554	76054654	725	635	720	595
760	76055164	76055264	76055364	76055464	76055564	76055664	885	720	880	680
760	76056174	76056274	76056374	76056474	76056574	76056674	1045	805	1040	765
760	76057184	76057284	76057384	76057484	76057584	76057684	1205	890	1200	850

Oadby Core product range
Oadby Available from stock in Leicester
Easy Available from stock in Italy
Standard Produced to order in Italy
Movex®

NEW

600 *Standard and Small radius - TAB Version*

Belt Reference	600 Standard - TAB / Reverse TAB / TAB reverse TAB	600 Small radius - TAB / Reverse TAB / TAB reverse TAB

Supply: Set of 2 pieces (upper & return)

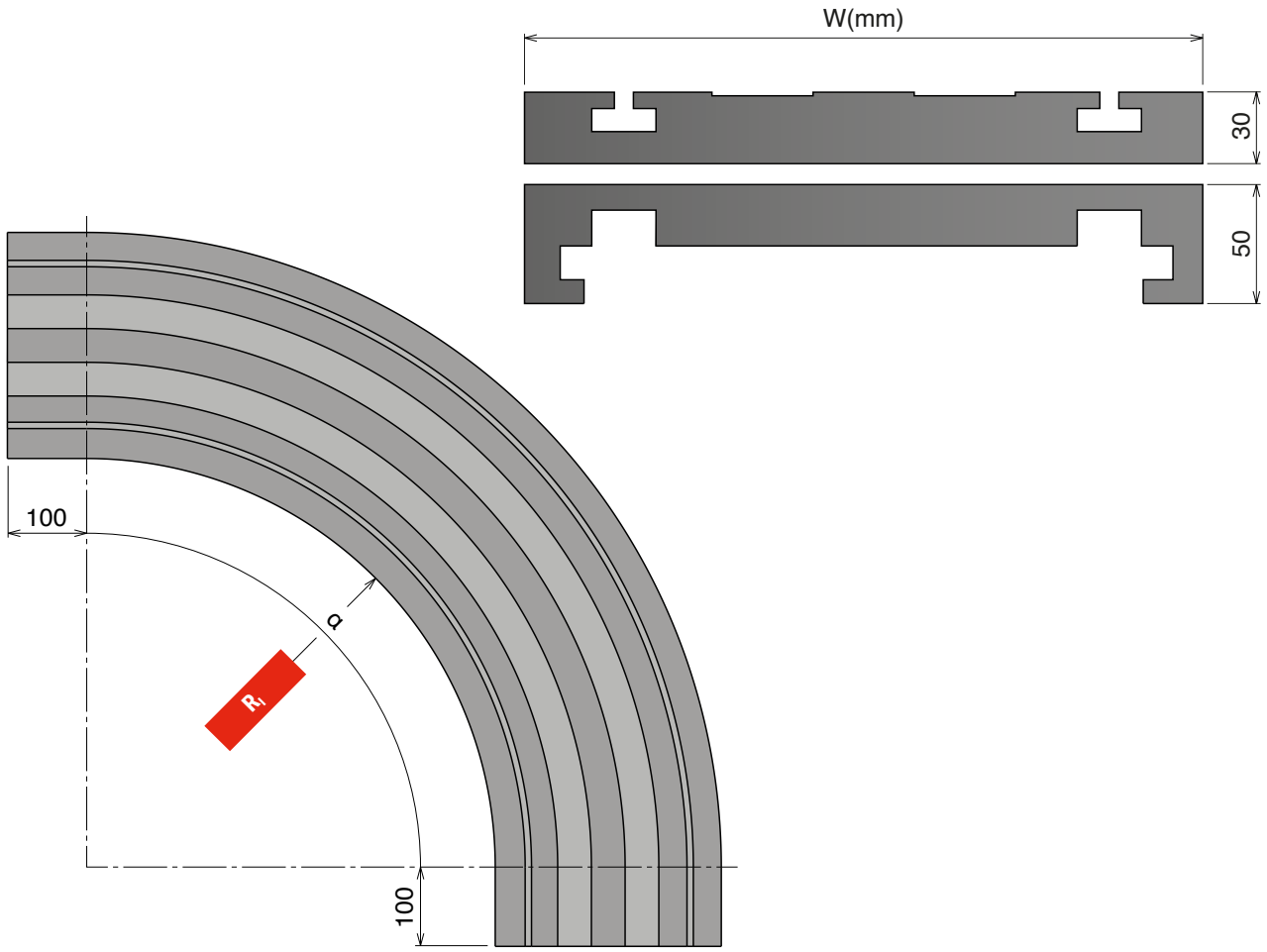

Upper part available, on request,
also in BluLub®
add "**B**" at the end of the code

600 *Standard - TAB / Reverse TAB / TAB reverse TAB*

Part	α 15°	α 30°	α 45°	α 60°	α 75°	α 90°	Curve radius R_I	Curve width W	Min. belt radius R_B	Belt width W_B
761	76141114	76141214	76141314	76141414	76141514	76141614	515	285	510	255
761	76142124	76142224	76142324	76142424	76142524	76142624	685	370	680	340
761	76143134	76143234	76143334	76143434	76143534	76143634	855	455	850	425
761	76144144	76144244	76144344	76144444	76144544	76144644	1025	540	1020	510
761	76145154	76145254	76145354	76145454	76145554	76145654	1195	625	1190	595
761	76146164	76146264	76146364	76146464	76146564	76146664	1365	710	1360	680
761	76147174	76147274	76147374	76147474	76147574	76147674	1535	795	1530	765
761	76148184	76148284	76148384	76148484	76148584	76148684	1705	880	1700	850

600 *Small radius - TAB / Reverse TAB / TAB reverse TAB*

Part	α 15°	α 30°	α 45°	α 60°	α 75°	α 90°	Curve radius R_I	Curve width W	Min. belt radius R_B	Belt width W_B
761	76151124	76151224	76151324	76151424	76151524	76151624	405	370	400	340
761	76152134	76152234	76152334	76152434	76152534	76152634	505	455	500	425
761	76153144	76153244	76153344	76153444	76153544	76153644	605	540	600	510
761	76154154	76154254	76154354	76154454	76154554	76154654	725	625	720	595
761	76155164	76155264	76155364	76155464	76155564	76155664	885	710	880	680
761	76156174	76156274	76156374	76156474	76156574	76156674	1045	795	1040	765
761	76157184	76157284	76157384	76157484	76157584	76157684	1205	880	1200	850

Materiale / Material / Materialien:
Polietilene UHMW-PE / BluLub
Polyethylene UHMW-PE / BluLub
Polyäthylen UHMW-PE / BluLub

NEW 600 Heavy duty and Heavy duty/Small radius

Belt Reference	600 Heavy duty	600 Heavy duty / Small radius

Supply: Set of 2 pieces (upper & return)

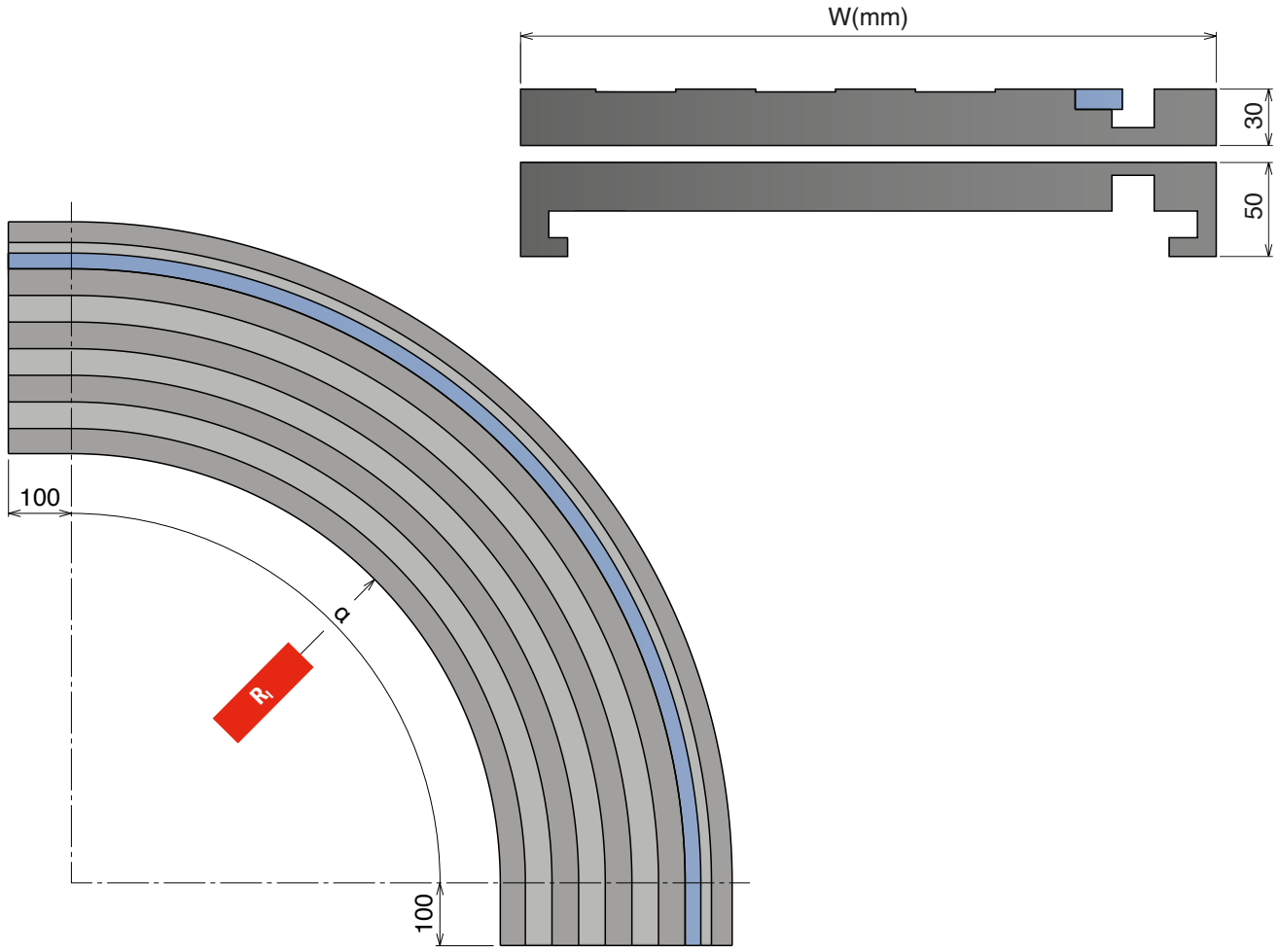

600 Heavy duty

Standard with BluLub® strip for minimized friction

Part	α 15°	α 30°	α 45°	α 60°	α 75°	α 90°	Curve radius R_I	Curve width W	Min. belt radius R_B	Belt width W_B
762	76241114	76241214	76241314	76241414	76241514	76241614	515	285	510	255
762	76242124	76242224	76242324	76242424	76242524	76242624	685	370	680	340
762	76243134	76243234	76243334	76243434	76243534	76243634	855	455	850	425
762	76244144	76244244	76244344	76244444	76244544	76244644	1025	540	1020	510
762	76245154	76245254	76245354	76245454	76245554	76245654	1195	625	1190	595
762	76246164	76246264	76246364	76246464	76246564	76246664	1365	710	1360	680
762	76247174	76247274	76247374	76247474	76247574	76247674	1535	795	1530	765
762	76248184	76248284	76248384	76248484	76248584	76248684	1705	880	1700	850

600 Heavy duty/Small radius

Part	α 15°	α 30°	α 45°	α 60°	α 75°	α 90°	Curve radius R_I	Curve width W	Min. belt radius R_B	Belt width W_B
762	76250114	76250214	76250314	76250414	76250514	76250614	395	285	390	255
762	76251124	76251224	76251324	76251424	76251524	76251624	425	370	420	340
762	76252134	76252234	76252334	76252434	76252534	76252634	505	455	500	425
762	76253144	76253244	76253344	76253444	76253544	76253644	605	540	600	510
762	76254154	76254254	76254354	76254454	76254554	76254654	725	625	720	595
762	76255164	76255264	76255364	76255464	76255564	76255664	885	710	880	680
762	76256174	76256274	76256374	76256474	76256574	76256674	1045	795	1040	765
762	76257184	76257284	76257384	76257484	76257584	76257684	1205	880	1200	850

Oadby Core product range
Oadby Available from stock in Leicester
Easy Available from stock in Italy
Standard Produced to order in Italy

Movex®

NEW

600 *with Bearings*

Belt Reference	600 Heavy duty with Bearings	600 Heavy duty/Small radius with Bearings

Supply: Set of 2 pieces (upper & return)

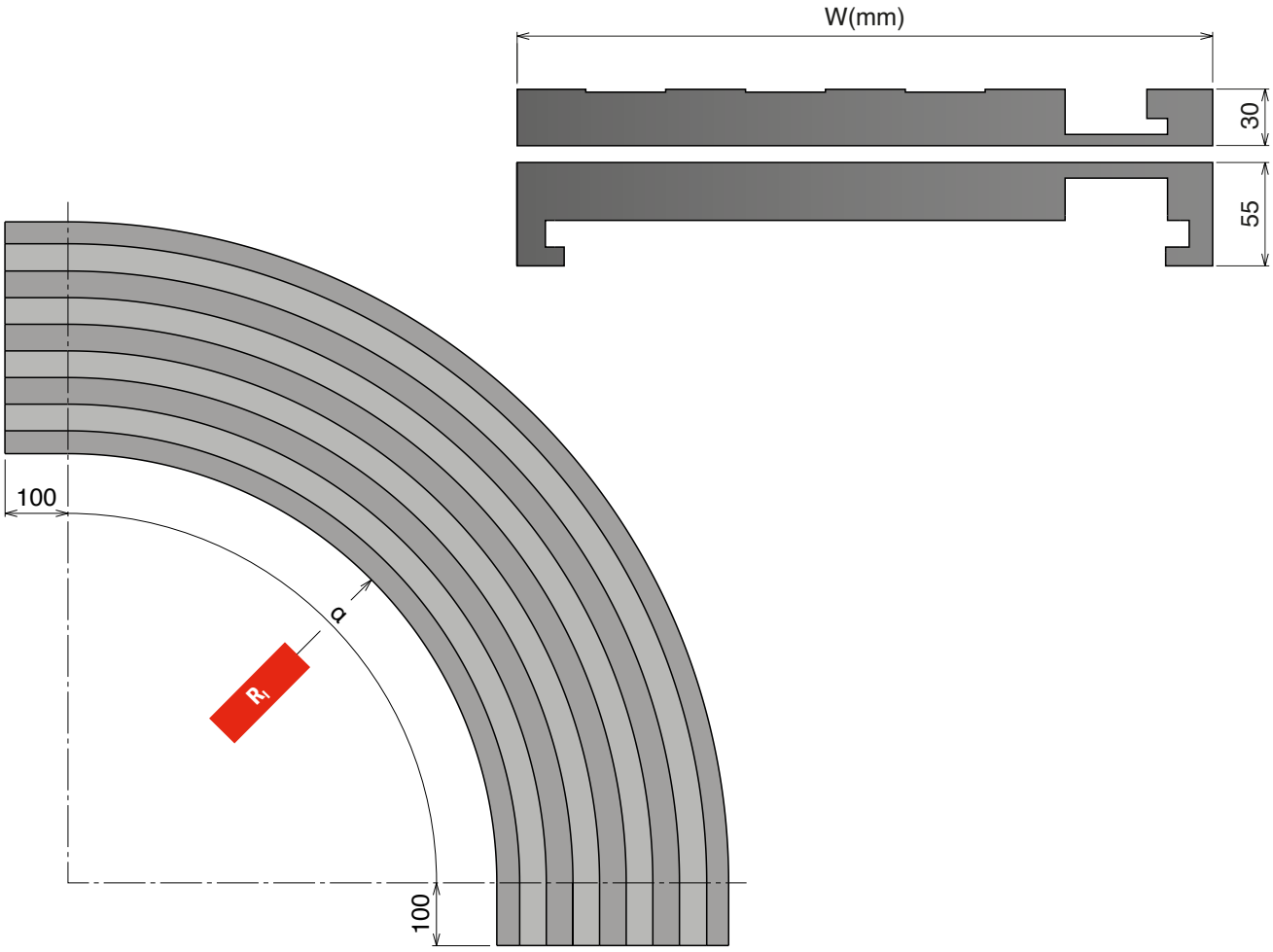

Upper part available, on request,
also in BluLub®
add "**B**" at the end of the code

600 *Heavy duty with Bearings*

Part	α 15°	α 30°	α 45°	α 60°	α 75°	α 90°	Curve radius R_I	Curve width W	Min. belt radius R_B	Belt width W_B
763	76341114	76341214	76341314	76341414	76341514	76341614	515	285	510	255
763	76342124	76342224	76342324	76342424	76342524	76342624	685	370	680	340
763	76343134	76343234	76343334	76343434	76343534	76343634	855	455	850	425
763	76344144	76344244	76344344	76344444	76344544	76344644	1025	540	1020	510
763	76345154	76345254	76345354	76345454	76345554	76345654	1195	625	1190	595
763	76346164	76346264	76346364	76346464	76346564	76346664	1365	710	1360	680
763	76347174	76347274	76347374	76347474	76347574	76347674	1535	795	1530	765
763	76348184	76348284	76348384	76348484	76348584	76348684	1705	880	1700	850

600 *Heavy duty/Small radius with Bearings*

Part	α 15°	α 30°	α 45°	α 60°	α 75°	α 90°	Curve radius R_I	Curve width W	Min. belt radius R_B	Belt width W_B
763	76350114	76350214	76350314	76350414	76350514	76350614	395	285	390	255
763	76351124	76351224	76351324	76351424	76351524	76351624	425	370	420	340
763	76352134	76352234	76352334	76352434	76352534	76352634	505	455	500	425
763	76353144	76353244	76353344	76353444	76353544	76353644	605	540	600	510
763	76354154	76354254	76354354	76354454	76354554	76354654	725	625	720	595
763	76355164	76355264	76355364	76355464	76355564	76355664	885	710	880	680
763	76356174	76356274	76356374	76356474	76356574	76356674	1045	795	1040	765
763	76357184	76357284	76357384	76357484	76357584	76357684	1205	880	1200	850

Materiale / *Material / Materialien:*
Polietilene UHMW-PE
Polyethylene UHMW-PE
Polyäthylen UHMW-PE

880-881-8881 B

Chain Reference	880 B - K325	881 B - K325	8881 B - K325

Supply: Set of 3 pieces (upper, return & plate)

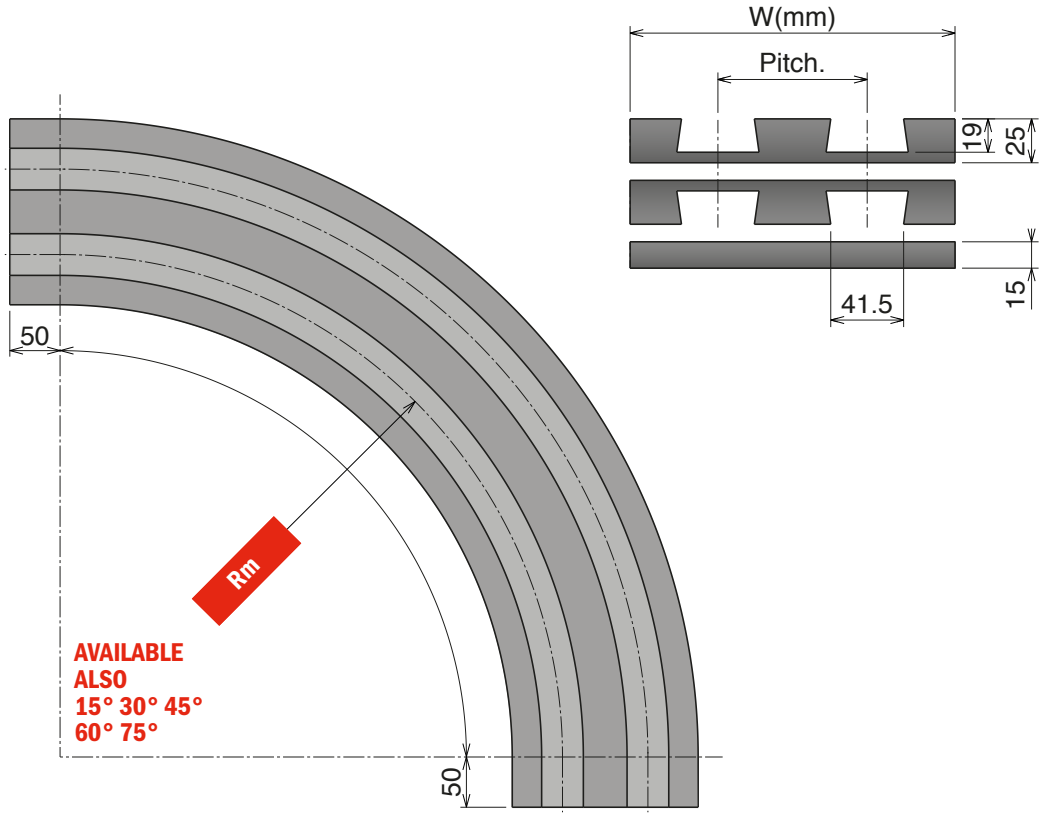

BEVEL SYSTEM

Upper part available, on request, also in BluLub® and for abrasive applications.

Part	Rm 500	Rm 610	Rm 800	Rm 1000	Tracks	W	Pitch
K325							
770	77031612	77033612	77037612	77039612	1	100	85
770	77031622	77033622	77037622	77039622	2	185	
770	77031632	77033632	77037632	77039632	3	270	
770	77031642	77033642	77037642	77039642	4	355	
770	77031652	77033652	77037652	77039652	5	440	
770	77031662	77033662	77037662	77039662	6	525	

Material

Standard codes on table

Upper part:

add "**B**" for BluLub®

add "**C**" for abrasive

Upper and return part:

add "**BB**" for BluLub®

add "**CC**" for abrasive

Oadby Core product range
Oadby Available from stock in Leicester
Easy Available from stock in Italy
Standard Produced to order in Italy

Movex®

878-879-880-881-888-260-261 TAB

Chain Reference	878-879 TAB - K325/K450	880-881-8811 TAB - K325/K450/K750	888 TAB - W80/140/200	260-261 TAB - K330/K450

Supply: 1 pieces

Straight track section

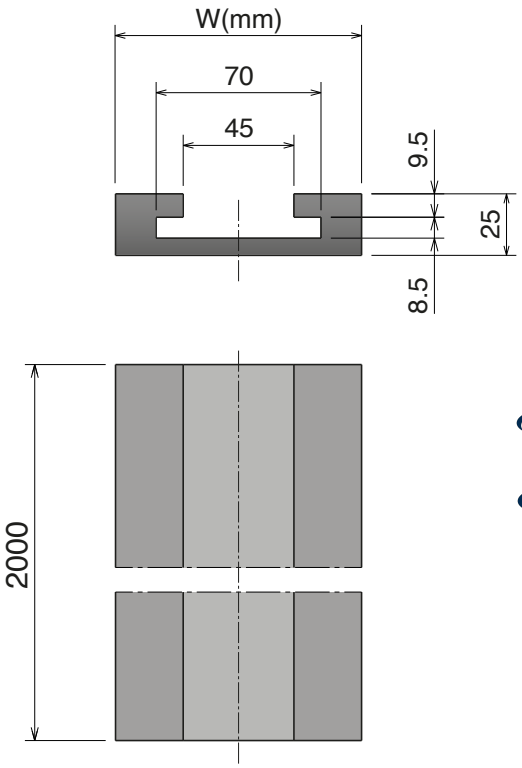

Straight track available, on request, also in BluLub® and for abrasive applications.

TAB SYSTEM

Part	Article-Nr.	W	Length
K325/W80			
790	79023010	100	2000
K450			
790	79024010	130	2000
W140			
796	79620110	155	2000
K750			
790	79026010	200	2000
W200			
796	79622110	215	2000

Standard codes on table

add "**B**" for BluLub®

add "**C**" for abrasive

882 TAB *Straight track section*

Chain Reference	882 TAB - K450/K750/K1000/K1200	Delivery: Easy	Standard

Supply: 1 pieces

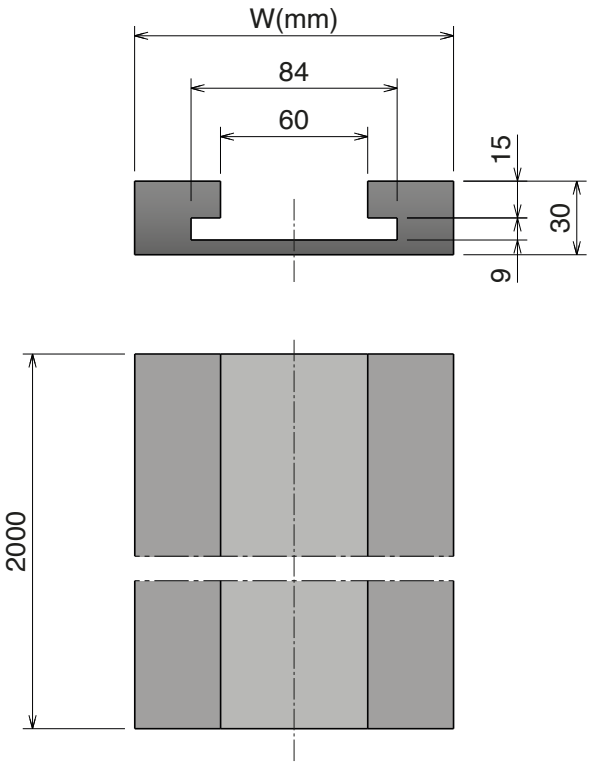

Straight track available, on request, also in BluLub® and for abrasive applications.

TAB SYSTEM

Part	Article-Nr.	W	Length
K450			
791	79124010	130	2000
K750			
791	79126010	200	2000
K1000			
791	79127010	270	2000
K1200			
791	79128010	320	2000

Standard codes on table

add "**B**" for BluLub®

add "**C**" for abrasive

Materiale / ***Material*** / ***Materialien:***
Polietilene UHMW-PE
Polyethylene UHMW-PE
Polyäthylen UHMW-PE

1873-1874 TAB *Straight track section*

Chain Reference | 1873 TAB-1874 TAB - K325/K450/K600/K750/K1000/K1200 | **Delivery:** Easy | Standard

Supply: 1 pieces

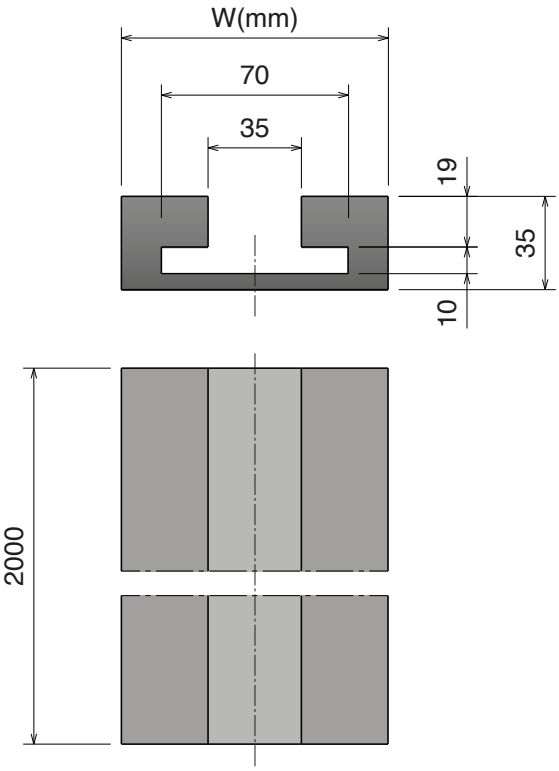

TAB SYSTEM

Straight track available, on request, also in BluLub® and for abrasive applications.

Part	Article-Nr.	W	Length
K325			
792	**79223010**	100	2000
K450			
792	**79224010**	130	2000
K600			
792	**79225010**	170	2000
K750			
792	**79226010**	200	2000
K1000			
792	**79227010**	270	2000
K1200			
792	**79228010**	320	2000

Standard codes on table

add "**B**" for BluLub®

add "**C**" for abrasive

1843 TAB *Straight track section*

Chain Reference | 1843 TAB - K125/K200

Supply: 1 pieces

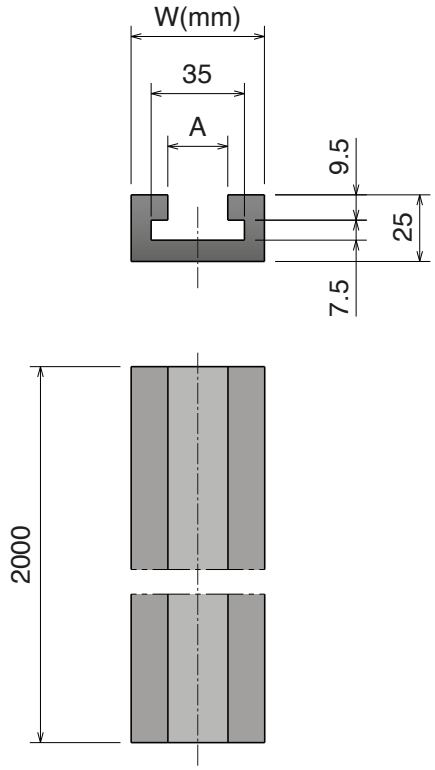

TAB SYSTEM

Straight track available, on request, also in BluLub® and for abrasive applications.

Part	Article-Nr.	W	A	Length
K125				
793	**79321010**	50	22,5	2000
K200				
793	**79322010**	70	22,3	2000

Standard codes on table

add "**B**" for BluLub®

add "**C**" for abrasive

Oadby Core product range
Oadby Available from stock in Leicester
Easy Available from stock in Italy
Standard Produced to order in Italy

Movex®

1701 TAB-1706 TAB *Straight track section*

Chain Reference 1701 TAB -1701 TAB OP- 1706 TAB - K55

Supply: 1 pieces

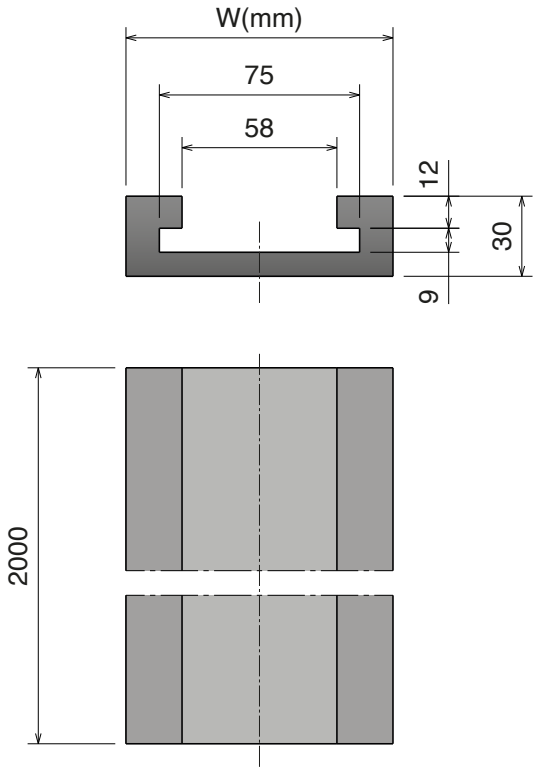

TAB SYSTEM

Straight track available, on request, also in BluLub® and for abrasive applications.

Part	Article-Nr.	W	Length	Material
K55				
794	79420010	100	2000	

Standard codes on table

add "**B**" for BluLub®

add "**C**" for abrasive

PFX

RANGE EXTENSION

The best choice for dry running applications.

PFX is the plastic material specifically developed for chains and belts in order to run with limited lubrication or in dry applications where the demands are extreme concerning speed, performance & efficiency.

Realizing the many advantages and the versatility of our plastic compound, a growing number of companies are implementing **PFX** into their production lines with excellent results. Contact us, and request a free quotation!

Modular belts available:

Other different types of product in PFX are on request.

520 FT

520 HD FT

520 PRO LBP

NEW

520 M

525 HD FT

525 HD FG

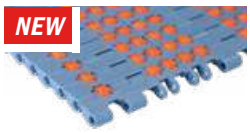

NEW

530 PRO LBP

550 FT &
One track belt

550 FG &
One track belt

550 PRO FT

550 PRO M

551 FT

551 PRO LBP

260 M FT

260 M FG

260 TAB

NEW

261 M FT

NEW

261 TAB

Low friction
Developed to reduce friction between chain and product, and chain and wearstrip.

High performance
Longer wear life lead to excellent and long enduring product handling features.

Minimal dusting
Developed to avoid dusting under extreme circumstances.

Control of cost
Better control of total cost & sustainable conveyor technology.

Food contact Certified
PFX material is suitable in food application.

Patented material
PFX is an exclusive product of Movex.

Energy saving | Low friction | High efficiency | High visibility

FDA APPROVAL

Modular belts

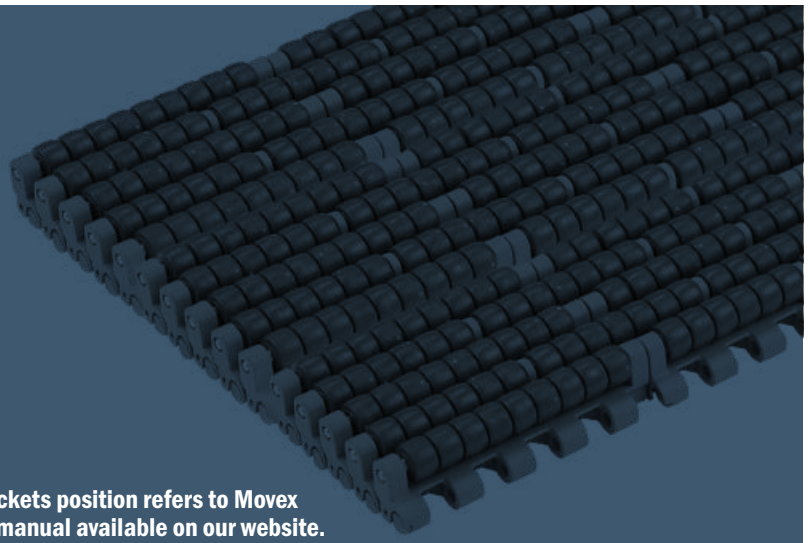

For belt sprockets position refers to Movex engineering manual available on our website.

510

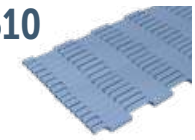

510 FT Pag 182

520

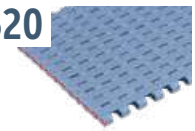

520 FT Pag 184
520 HD FT Pag 185
520 FTT Pag 186
520 FG Pag 187
520 GT Pag 188
520 LBP Pag 189
520 PRO LBP Pag 190
520 M Pag 191

521

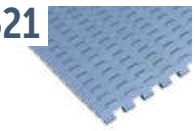

521 FT Pag 193

522

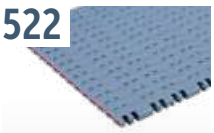

522 HD FT Pag 194
522 HD One track Belt Pag 195

590

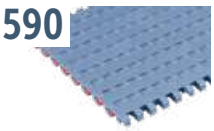

590 FT Pag 197
590 FT One track Belt Pag 198
590 FTT Pag 199

525

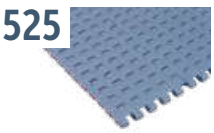

525 HD FT Pag 201
525 HD FT + RIB Pag 202
525 FTT Pag 203
525 HD FG Pag 204
525 HD GT Pag 205
525 HD GT Side indent Pag 206

530

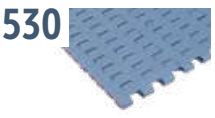

530 FT Pag 208
530 FTT Pag 209
530 GT Pag 210
530 GT Side indent Pag 211
530 LBP Pag 212
530 PRO LBP Pag 213

550

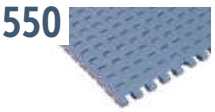

550 FT Pag 215
550 FT One track Belt Pag 216
550 FTT Pag 217
550 FG Pag 218
550 FG One track Belt Pag 219
550 GT Pag 220
550 GT Side indent Pag 221
550 FLIGHT TOP Pag 222/223
550 PRO FT Pag 224
550 PRO M Pag 225

551

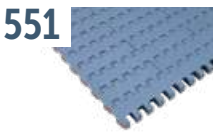

551 FT Pag 227
551 FTT Pag 228
551 GT Pag 229
551 GT Side indent Pag 230
551 LBP Pag 231
551 PRO LBP Pag 232

552

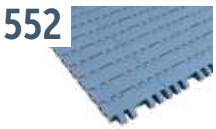

552 FT Pag 234
552 FT One track Belt Pag 235
552 FTT Pag 236
552 PT Pag 237
552 PT One track Belt Pag 238
552 GT Pag 239
552 GT Side indent Pag 240

553

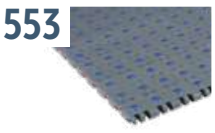

553 FLEX TOP Pag 242/243

556

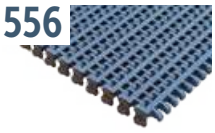

556 FT Pag 245
556 GT Pag 246

600

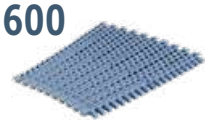

600 Standard Pag 248
600 Heavy duty Pag 249
600 Heavy duty with Bearings Pag 250
600 Small radius Pag 251
600 Heavy duty/ Small radius Pag 252
600 Heavy duty/ Small radius with Bearings Pag 253
600 with pusher Pag 254
1047 Heavy duty guide Pag 254

Material Info:

pg. 651->661

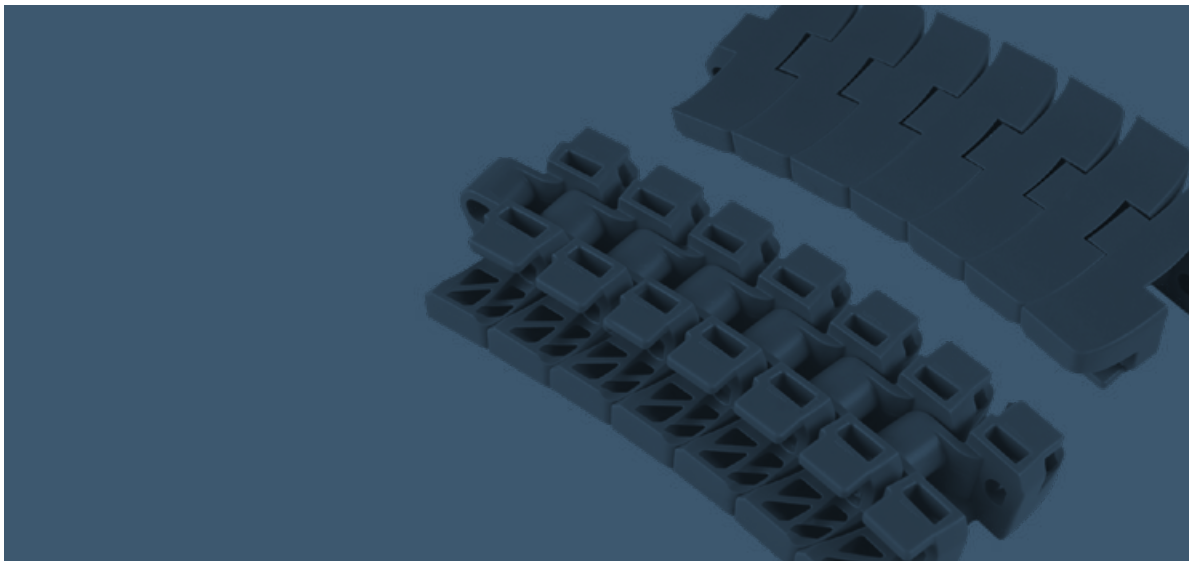

500

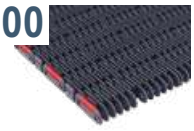

500 RR Pag 256

500 RR with Positioner Pag 257

389

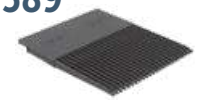

389 Combs Pag 258

ZERO CONTACT Pag 260/261

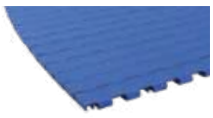

ZERO CONTACT PRO Pag 262/263

260

260 M FT Pag 265

260 M FG Pag 266

260 TAB Pag 267

261

261 M FT Pag 268

261 TAB Pag 269

NoseBars Standard

for Modular belt:

510 Series Pag 273

520 Series Pag 273

525 Series Pag 273

521 Series Pag 274

522 HD Series Pag 274

530 Series *(LBP excluded)* Pag 275

530 LBP Pag 275

530 PRO LBP Pag 276

NoseBars with Bearings

for Modular belt:

520 Series Pag 277

525 Series Pag 277

521 Series Pag 277

522 HD Series Pag 278

530 Series *(LBP excluded)* Pag 278

530 LBP Pag 279

530 PRO LBP Pag 279

NoseBars with Rollers

for Modular belt:

520 Series Pag 280

525 Series Pag 280

521 Series Pag 280

522 HD Series Pag 281

530 Series *(LBP excluded)* Pag 281

One piece

Custom made NoseBar, supplied in a single piece.

One piece is the system patended by Movex that greatly reduces the time necessary for the conveyor maintenance: being a single piece, of the required size, it is quick to install and easy to clean.

Standard

for Modular belt:

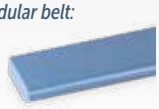

520 Series Pag 282

525 Series Pag 282

522 HD Series Pag 282

530 Series Pag 282

with Bearings

for Modular belt:

520 Series Pag 283

525 Series Pag 283

522 HD Series Pag 283

530 Series Pag 283

with Rollers

for Modular belt:

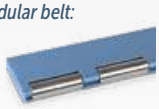

520 Series Pag 284

525 Series Pag 284

522 HD Series Pag 284

530 Series Pag 284

510

Pitch 8 mm
H= 6 mm

510 FT

Imperial Size

510 FT

Tappeto Modulare 510 FT, H=6 M=3”
Modular Belt Series 510 FT, H=6 M=3” / Modulare Mattenkette 510 FT, H=6 M=3”

CODE STRUCTURE GUIDE (Example)

Backflex radius min.: 7.5 mm

5331	01	0012	A
Series	*Material	Width	Version

pg. 312 | NoseBars pg. 273 | 510 Transfer pg. 296/298 | pg. 651>661

SAMPLE BOX
Art.-Nr. 5331018888A

Pin Sphere® AUTOLOCK
- Easier installation
- Quicker maintenance

***Material**

LFA - Code 01
Low friction Acetal
Easy Delivery

Max w. load:	3000 N/m
Weight:	5,8 kg/m²
Temp. range dry:	-40÷80 °C
Temp. range wet:	-40÷65 °C
Pin material:	PBT grey

MX - Code 03
Performance PBT

Max w. load:	2700 N/m
Weight:	5,5 kg/m²
Temp. range dry:	-40÷120 °C
Temp. range wet:	-40÷60 °C
Pin material:	POM grey

LFB - Code 23
Low friction Acetal

Max w. load:	3000 N/m
Weight:	5,8 kg/m²
Temp. range dry:	-40÷80 °C
Temp. range wet:	-40÷65 °C
Pin material:	PBT grey

Version A - Standard

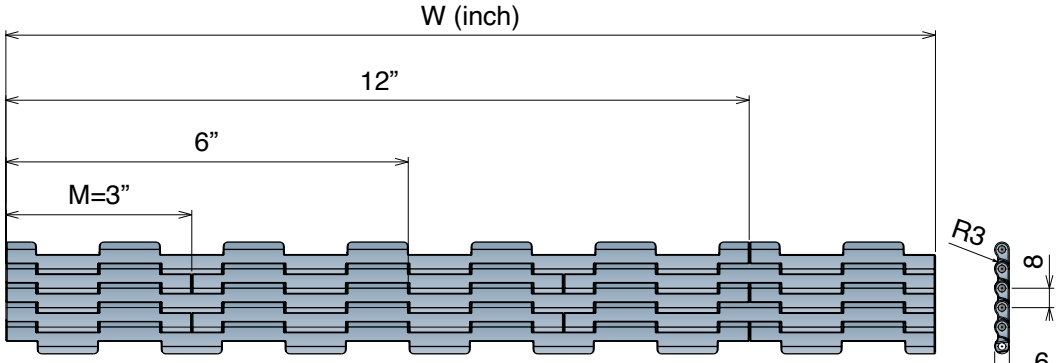

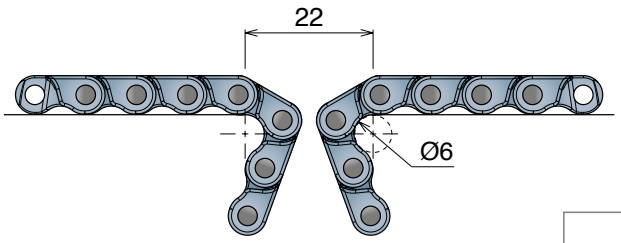

Version A - Standard

Series	Material	Width	Version
5331	*	0003	A
5331	*	0006	A
5331	*	0009	A
5331	*	0012	A
5331	*	0015	A
5331	*	0018	A
5331	*	0021	A
5331	*	0024	A
5331	*	0027	A
5331	*	0030	A
5331	*	0033	A
5331	*	0036	A
5331	*	0039	A
5331	*	0042	A
5331	*	0045	A
5331	*	0048	A

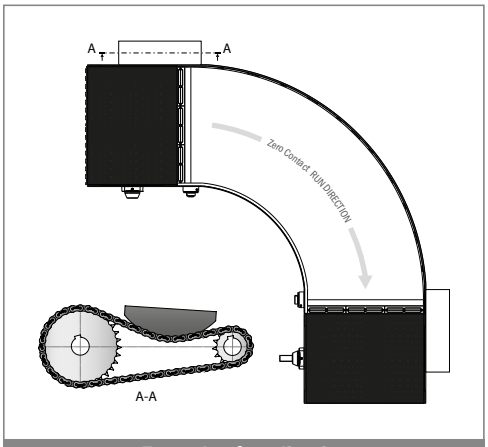

Example of application

NEW

510 FT MOVEX TOOL

Developed to facilitate belt assembly and disassembly.

Article Nr. 29969

Movex tools are made with 3D printer, the color may vary due to availability of the material.

Oadby Core product range
Oadby Available from stock in Leicester | Easy Available from stock in Italy | Standard Produced to order in Italy

Movex®

520

Pitch 12,7 mm
H= 8,7 mm

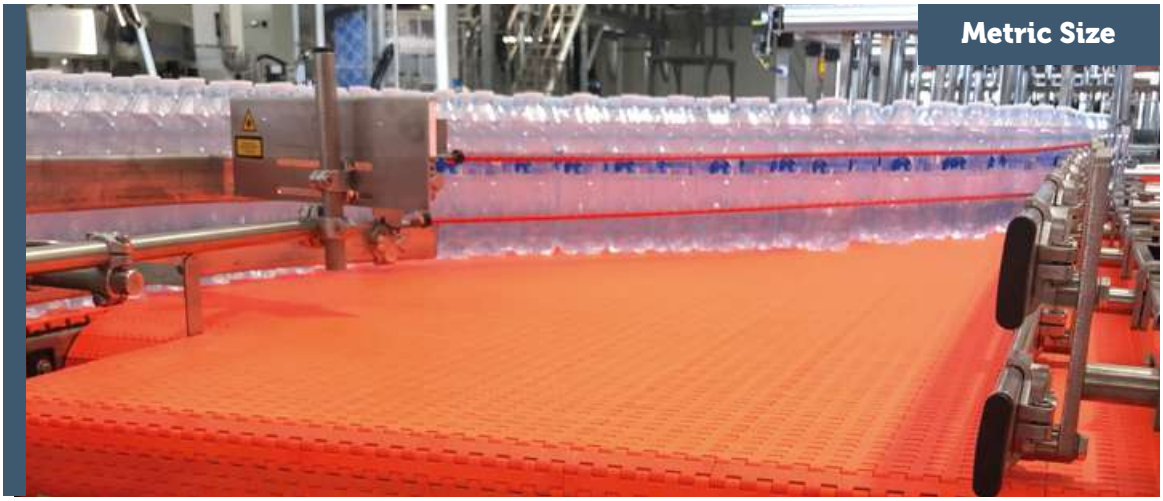

520 FT
520 HD FT
520 FTT
520 FG
520 GT
520 LBP
520 PRO LBP
520 M

Movex®

Metric Size

520 FT

Tappeto Modulare 520 FT, H=8,7 M=85
Modular Belt Series 520 FT, H=8,7 M=85 / Modulare Mattenkette 520 FT, H=8,7 M=85

CODE STRUCTURE GUIDE (Example) — **Backflex radius min.:** 10 mm

5201	01	0085	A
Series	*Material	Width	Version

pg. 315-316 | NoseBars 273/277/280 | pg. 651>661

SAMPLE BOX
Art.-Nr. **5201018888A**

REINFORCED POSITIONER

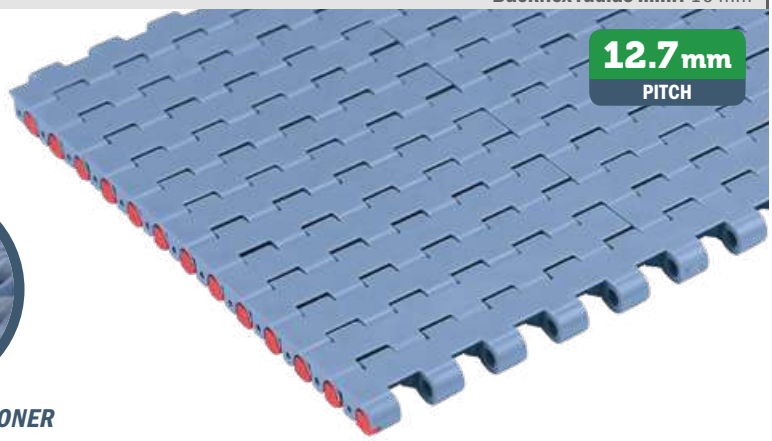

Version A - Standard

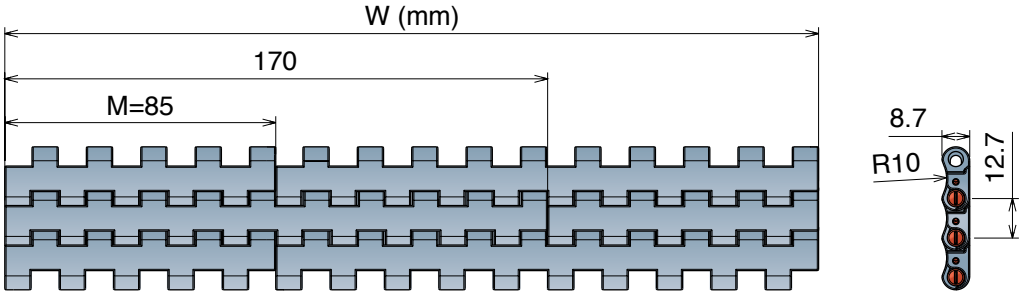

Version B - With 1 Positioner

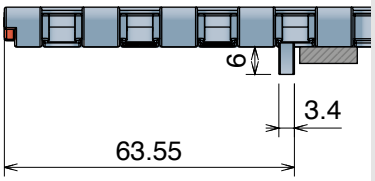

Version C - With 2 Positioner

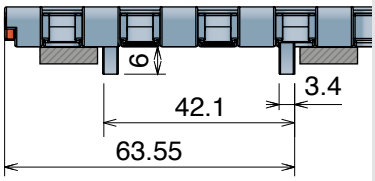

***Material**

LFA - Code 01
Low friction Acetal

Easy Delivery

Max w. load:	21500 N/m
Weight:	7,8 kg/m²
Temp. range dry:	-40÷80 °C
Temp. range wet:	-40÷65 °C
Pin material:	PBT white

PP - Code 02
Polypropylene

Max w. load:	13000 N/m
Weight:	7,5 kg/m²
Temp. range dry:	4÷104 °C
Temp. range wet:	4÷104 °C
Pin material:	PP blue

MX - Code 03
Performance PBT

Max w. load:	17500 N/m
Weight:	7,5 kg/m²
Temp. range dry:	-40÷120 °C
Temp. range wet:	-40÷60 °C
Pin material:	POM grey

LFB - Code 23
Low friction Acetal

Max w. load:	21500 N/m
Weight:	7,8 kg/m²
Temp. range dry:	-40÷80 °C
Temp. range wet:	-40÷65 °C
Pin material:	PBT white

MPX - Code 25
Lubricated Acetal

Max w. load:	21500 N/m
Weight:	7,8 kg/m²
Temp. range dry:	-40÷80 °C
Temp. range wet:	-40÷65 °C
Pin material:	PBT white

PFX - Code 30
Extra performance PBT

Max w. load:	17500 N/m
Weight:	7,5 kg/m²
Temp. range dry:	-40÷120 °C
Temp. range wet:	-40÷60 °C
Pin material:	POM grey

THE BEST CHOICE FOR DRY RUNNING APPLICATIONS

Version A - Standard

Series	Material	Width	Version
5201	*	0085	A
5201	*	0170	A
5201	*	0255	A
5201	*	0340	A
5201	*	0425	A
5201	*	0510	A
5201	*	0595	A
5201	*	0680	A
5201	*	0765	A
5201	*	0850	A
5201	*	0935	A
5201	*	1020	A
5201	*	1105	A
5201	*	1190	A
5201	*	1275	A
5201	*	1360	A
5201	*	1445	A
5201	*	1530	A

Version B - With 1 Positioner

Series	Material	Width	Version
5201	*	0085	B
5201	*	0170	B
5201	*	0255	B
5201	*	0340	B
5201	*	0425	B
5201	*	0510	B
5201	*	0595	B
5201	*	0680	B
5201	*	0765	B
5201	*	0850	B
5201	*	0935	B
5201	*	1020	B
5201	*	1105	B
5201	*	1190	B
5201	*	1275	B
5201	*	1360	B
5201	*	1445	B
5201	*	1530	B

Version C - With 2 Positioners

Series	Material	Width	Version
5201	*	0085	C
5201	*	0170	C
5201	*	0255	C
5201	*	0340	C
5201	*	0425	C
5201	*	0510	C
5201	*	0595	C
5201	*	0680	C
5201	*	0765	C
5201	*	0850	C
5201	*	0935	C
5201	*	1020	C
5201	*	1105	C
5201	*	1190	C
5201	*	1275	C
5201	*	1360	C
5201	*	1445	C
5201	*	1530	C

Oadby Core product range
Oadby Available from stock in Leicester | Easy Available from stock in Italy | Standard Produced to order in Italy

520 HD FT

Tappeto Modulare 520 HD, H=8,7 M=85

Modular Belt Series 520 HD, H=8,7 M=85 / Modulare Mattenkette 520 HD, H=8,7 M=85

CODE STRUCTURE GUIDE (Example)

Backflex radius min.: 10 mm

5211	01	0085	A
Series	*Material	Width	Version

pg. 313-314 | NoseBars 273/277/280 | pg. 651>661

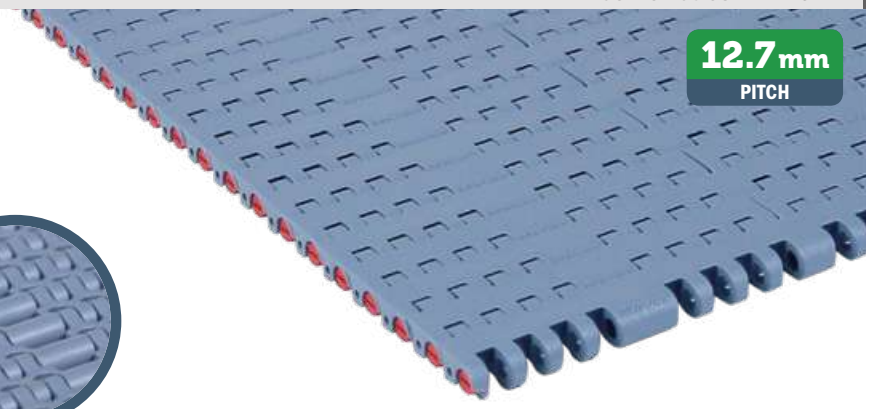

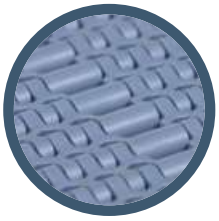

SAMPLE BOX

Art.-Nr. **5211018888A**

***Material**

LFA - Code 01
Low friction Acetal

Easy Delivery

Max w. load:	25500 N/m
Weight:	7,8 kg/m²
Temp. range dry:	-40÷80 °C
Temp. range wet:	-40÷65 °C
Pin material:	PBT white

MX - Code 03
Performance PBT

Max w. load:	20000 N/m
Weight:	7,5 kg/m²
Temp. range dry:	-40÷120 °C
Temp. range wet:	-40÷60 °C
Pin material:	POM grey

MPX - Code 25
Lubricated Acetal

Max w. load:	25000 N/m
Weight:	7,8 kg/m²
Temp. range dry:	-40÷80 °C
Temp. range wet:	-40÷65 °C
Pin material:	PBT white

PFX - Code 30
Extra performance PBT

Max w. load:	20000 N/m
Weight:	7,5 kg/m²
Temp. range dry:	-40÷120 °C
Temp. range wet:	-40÷60 °C
Pin material:	POM grey

THE BEST CHOICE FOR DRY RUNNING APPLICATIONS

Version A - Standard

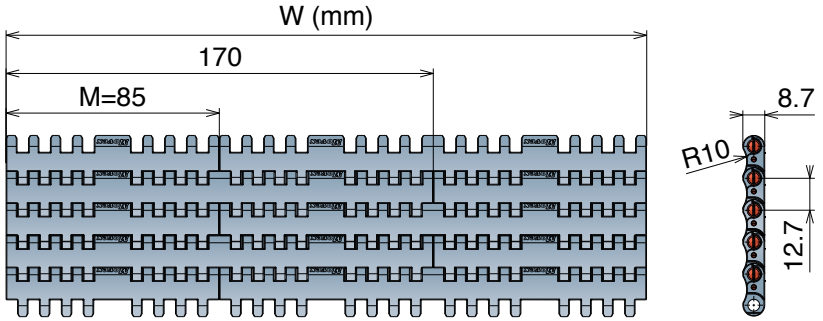

Version B - With 1 Positioner

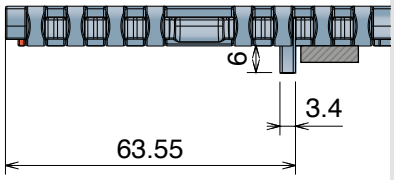

Version C - With 2 Positioner

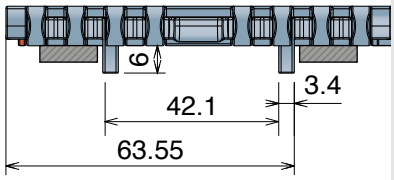

Version A - Standard

Series	Material	Width	Version
5211	*	0085	A
5211	*	0170	A
5211	*	0255	A
5211	*	0340	A
5211	*	0425	A
5211	*	0510	A
5211	*	0595	A
5211	*	0680	A

Version B - With 1 Positioner

Series	Material	Width	Version
5211	*	0085	B
5211	*	0170	B
5211	*	0255	B
5211	*	0340	B
5211	*	0425	B
5211	*	0510	B
5211	*	0595	B
5211	*	0680	B

Version C - With 2 Positioners

Series	Material	Width	Version
5211	*	0085	C
5211	*	0170	C
5211	*	0255	C
5211	*	0340	C
5211	*	0425	C
5211	*	0510	C
5211	*	0595	C
5211	*	0680	C

Advantages:

- Improved working load
- Easy installation
- Rigidity
- Product stability

Metric Size

520 FTT

Tappeto Modulare 520 FTT, H=8,7 M=85
Modular Belt Series 520 FTT, H=8,7 M=85 / Modulare Mattenkette 520 FTT, H=8,7 M=85

CODE STRUCTURE GUIDE (Example)

Backflex radius min.: 10 mm

5206	01	0085	C
Series	*Material	Width	Version

pg. 315-316 | NoseBars 273/277/280 | pg. 651>661

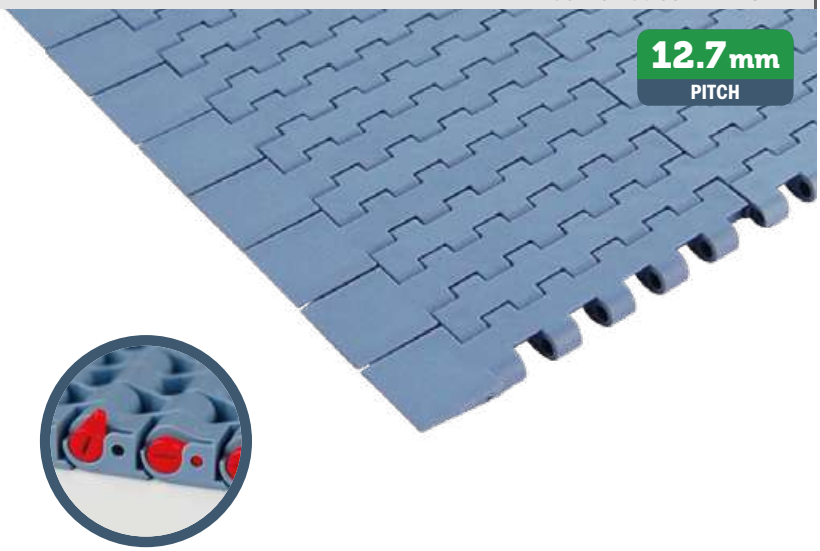

*Material

LFA - Code 01 *Low friction Acetal*		MX - Code 03 *Performance PBT*	
Max w. load:	21500 N/m	**Max w. load:**	17500 N/m
Weight:	7,8 kg/m²	**Weight:**	7,5 kg/m²
Temp. range dry:	-40÷80 °C	**Temp. range dry:**	-40÷120 °C
Temp. range wet:	-40÷65 °C	**Temp. range wet:**	40÷60 °C
Pin material:	PBT white	**Pin material:**	POM grey

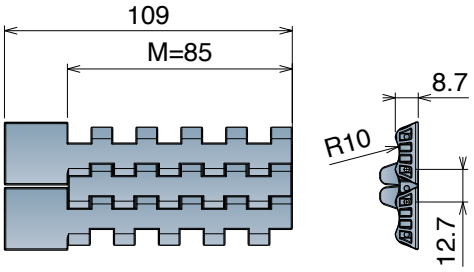

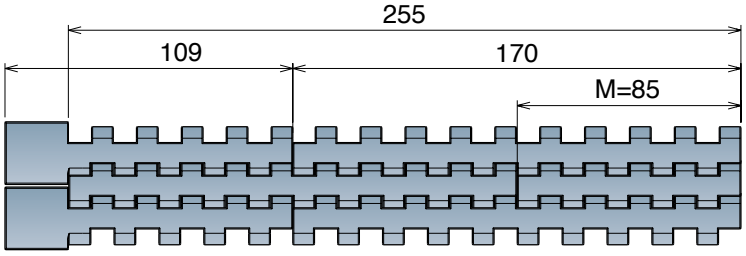

Version C

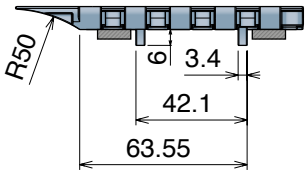

Version CN - Near

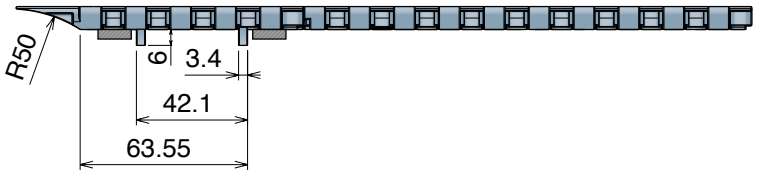

Version C

Series	Material	Width	Version
5206	*	0085	C

Version CO - Opposite

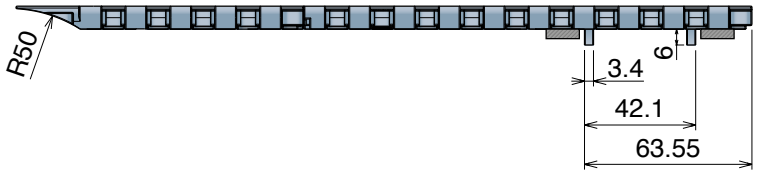

Max working load (N)	
Width	85
LFA	1850
MX	1500

Version CN - Near

Series	Material	Width	Version
5206	*	0170	CN
5206	*	0255	CN

Version CO - Opposite

Series	Material	Width	Version
5206	*	0170	CO
5206	*	0255	CO

Oadby Core product range
Oadby Available from stock in Leicester
Easy Available from stock in Italy
Standard Produced to order in Italy
Movex

520 FG Open Surface 25% Tappeto Modulare 520 FG, H=8,7 M=85

Modular Belt Series 520 FG, H=8,7 M=85 / Modulare Mattenkette 520 FG, H=8,7 M=85

CODE STRUCTURE GUIDE (Example)

Backflex radius min.: 10 mm

5202	01	0085	A
Series	*Material	Width	Version

pg. 315-316 | NoseBars 273/277/280 | pg. 651>661

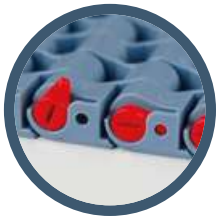

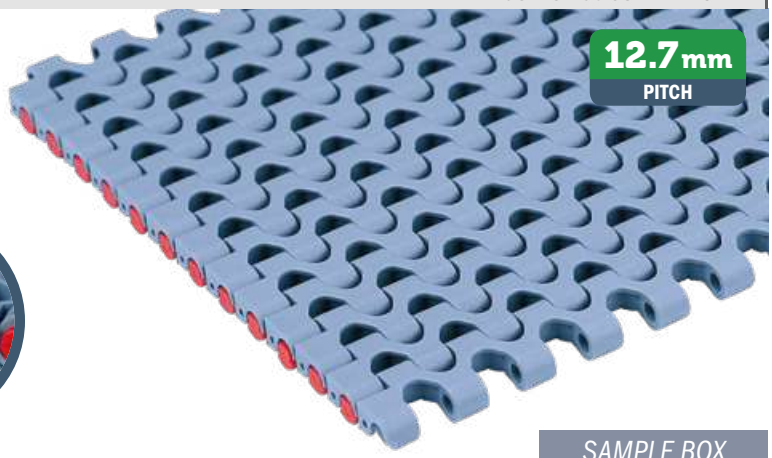

SAMPLE BOX

Art.-Nr. 5202018888A

*Material

LFA - Code 01
Low friction Acetal

Easy Delivery

Max w. load:	21500 N/m
Weight:	7,5 kg/m²
Temp. range dry:	-40÷80 °C
Temp. range wet:	-40÷65 °C
Pin material:	PBT white

PP - Code 02
Polypropylene

Max w. load:	13000 N/m
Weight:	7,5 kg/m²
Temp. range dry:	4÷104 °C
Temp. range wet:	4÷104 °C
Pin material:	PP blue

MX - Code 03
Performance PBT

Max w. load:	17500 N/m
Weight:	7,2 kg/m²
Temp. range dry:	-40÷120 °C
Temp. range wet:	-40÷60 °C
Pin material:	POM grey

DKM - Code 16
Aramide Reinforced Acetal

Max w. load:	21500 N/m
Weight:	7,5 kg/m²
Temp. range dry:	-40÷80 °C
Temp. range wet:	-40÷65 °C
Pin material:	PBT white

MWX - Code 17
Polyamide Composite

Max w. load:	21500 N/m
Weight:	7,8 kg/m²
Temp. range dry:	-40÷104 °C
Temp. range wet:	NR
Pin material:	PBT white

LFB - Code 23
Low friction Acetal

Max w. load:	21500 N/m
Weight:	7,5 kg/m²
Temp. range dry:	-40÷80 °C
Temp. range wet:	-40÷65 °C
Pin material:	PBT white

MPX - Code 25
Lubricated Acetal

Max w. load:	21500 N/m
Weight:	7,5 kg/m²
Temp. range dry:	-40÷80 °C
Temp. range wet:	-40÷65 °C
Pin material:	PBT white

Version A - Standard

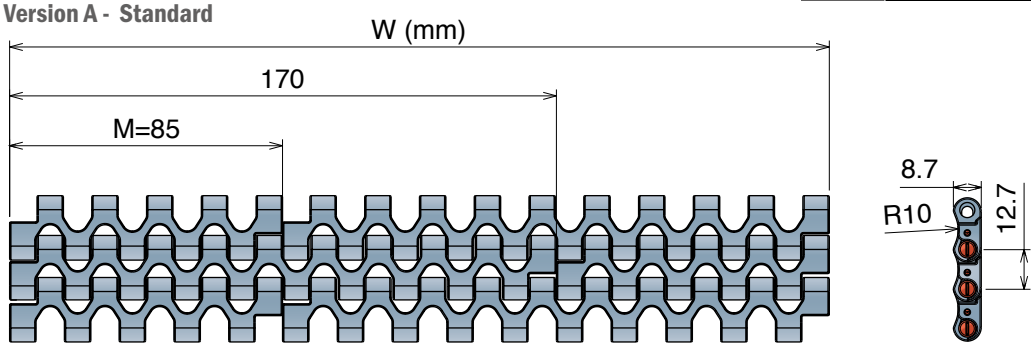

Version B - With 1 Positioner

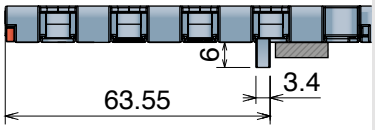

Version C - With 2 Positioner

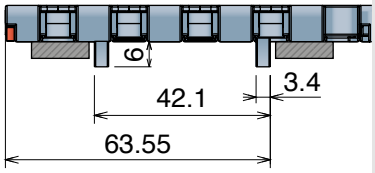

Version A - Standard

Series	Material	Width	Version
5202	*	0085	A
5202	*	0170	A
5202	*	0255	A
5202	*	0340	A
5202	*	0425	A
5202	*	0510	A
5202	*	0595	A
5202	*	0680	A
5202	*	0765	A
5202	*	0850	A
5202	*	0935	A
5202	*	1020	A
5202	*	1105	A
5202	*	1190	A
5202	*	1275	A
5202	*	1360	A
5202	*	1445	A
5202	*	1530	A

Version B - With 1 Positioner

Series	Material	Width	Version
5202	*	0085	B
5202	*	0170	B
5202	*	0255	B
5202	*	0340	B
5202	*	0425	B
5202	*	0510	B
5202	*	0595	B
5202	*	0680	B
5202	*	0765	B
5202	*	0850	B
5202	*	0935	B
5202	*	1020	B
5202	*	1105	B
5202	*	1190	B
5202	*	1275	B
5202	*	1360	B
5202	*	1445	B
5202	*	1530	B

Version C - With 2 Positioners

Series	Material	Width	Version
5202	*	0085	C
5202	*	0170	C
5202	*	0255	C
5202	*	0340	C
5202	*	0425	C
5202	*	0510	C
5202	*	0595	C
5202	*	0680	C
5202	*	0765	C
5202	*	0850	C
5202	*	0935	C
5202	*	1020	C
5202	*	1105	C
5202	*	1190	C
5202	*	1275	C
5202	*	1360	C
5202	*	1445	C
5202	*	1530	C

520 GT

Tappeto Modulare 520 GT, H=8,7 M=85
Modular Belt Series 520 GT, H=8,7 M=85 / Modulare Mattenkette 520 GT, H=8,7 M=85

CODE STRUCTURE GUIDE (Example)

Backflex radius min.: 20 mm

5203	01	0085	A
Series	*Material	Width	Version

pg. 315-316 | NoseBars 273/277/280 | pg. 651>661

SAMPLE BOX
Art.-Nr. **5203018888A**

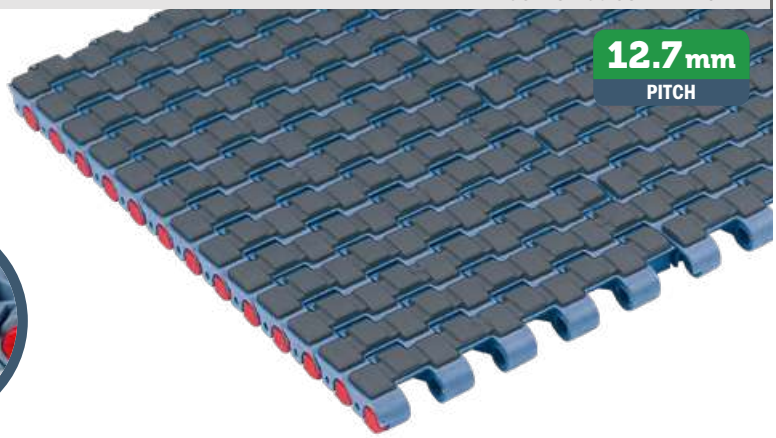

*Material

LFA - Code 01
Low friction Acetal

Easy Delivery

Max w. load: 21500 N/m
Weight: 9,0 kg/m²
Temp. range dry: -40÷80 °C
Temp. range wet: -40÷65 °C
Pin material: PBT white
Top rubber: 50 ShA-Dark grey

PP - Code 02
Polypropylene

Max w. load: 13000 N/m
Weight: 7,5 kg/m²
Temp. range dry: 4÷80 °C
Temp. range wet: 4÷80 °C
Pin material: PP blu
Top rubber: 50 ShA-Pigeon blue

MX - Code 03
Performance PBT

Max w. load: 17500 N/m
Weight: 9,3 kg/m²
Temp. range dry: -40÷120 °C
Temp. range wet: -40÷60 °C
Pin material: POM grey
Top rubber: 50 ShA-Dark grey

Version A - Standard

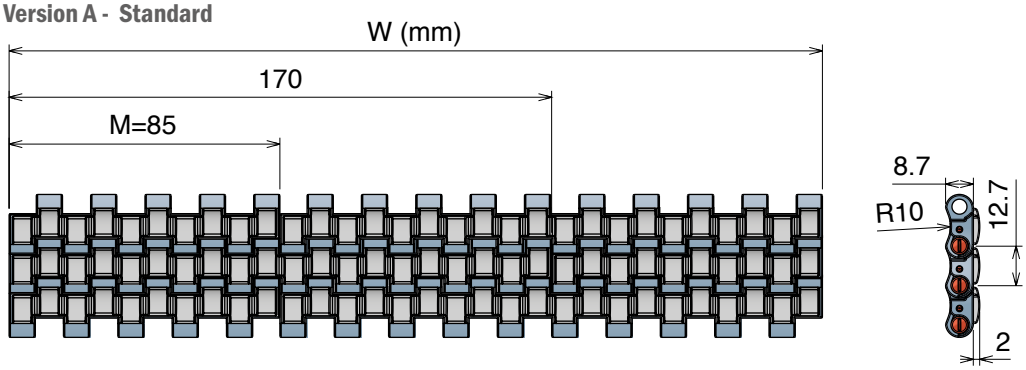

Version B - With 1 Positioner

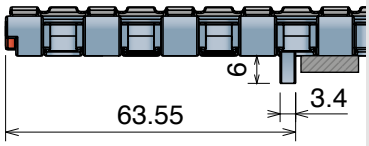

Version C - With 2 Positioner

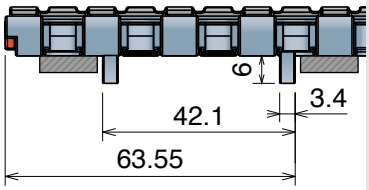

Version A - Standard

Series	Material	Width	Version
5203	*	0085	A
5203	*	0170	A
5203	*	0255	A
5203	*	0340	A
5203	*	0425	A
5203	*	0510	A
5203	*	0595	A
5203	*	0680	A
5203	*	0765	A
5203	*	0850	A
5203	*	0935	A
5203	*	1020	A
5203	*	1105	A
5203	*	1190	A
5203	*	1275	A
5203	*	1360	A
5203	*	1445	A
5203	*	1530	A

Version B - With 1 Positioner

Series	Material	Width	Version
5203	*	0085	B
5203	*	0170	B
5203	*	0255	B
5203	*	0340	B
5203	*	0425	B
5203	*	0510	B
5203	*	0595	B
5203	*	0680	B
5203	*	0765	B
5203	*	0850	B
5203	*	0935	B
5203	*	1020	B
5203	*	1105	B
5203	*	1190	B
5203	*	1275	B
5203	*	1360	B
5203	*	1445	B
5203	*	1530	B

Version C - With 2 Positioners

Series	Material	Width	Version
5203	*	0085	C
5203	*	0170	C
5203	*	0255	C
5203	*	0340	C
5203	*	0425	C
5203	*	0510	C
5203	*	0595	C
5203	*	0680	C
5203	*	0765	C
5203	*	0850	C
5203	*	0935	C
5203	*	1020	C
5203	*	1105	C
5203	*	1190	C
5203	*	1275	C
5203	*	1360	C
5203	*	1445	C
5203	*	1530	C

Oadby Core product range
Oadby Available from stock in Leicester | Easy Available from stock in Italy | Standard Produced to order in Italy

Movex®

520 LBP

Tappeto Modulare 520 LBP, H=8,7 M=85

Modular Belt Series 520 LBP, H=8,7 M=85 / Modulare Mattenkette 520 LBP, H=8,7 M=85

CODE STRUCTURE GUIDE (Example)

Backflex radius min.: 65 mm

5204	01	0085	A
Series	*Material	Width	Version

pg. 315-316 | NoseBars 273/277/280 | pg. 651>661

SAMPLE BOX

Art.-Nr. 5204010888A

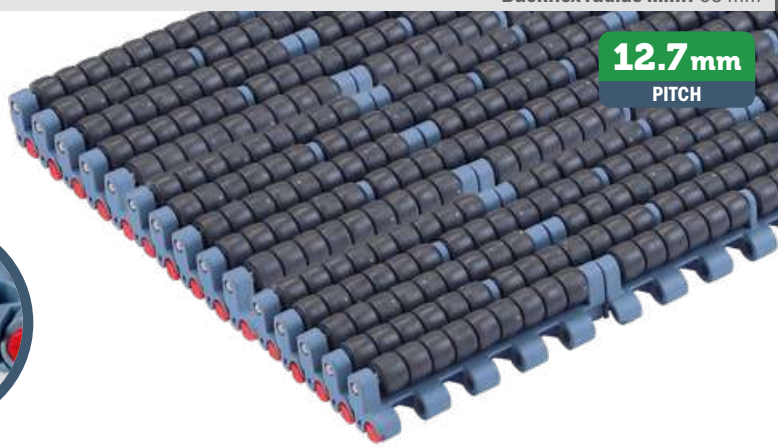

Version A - Standard

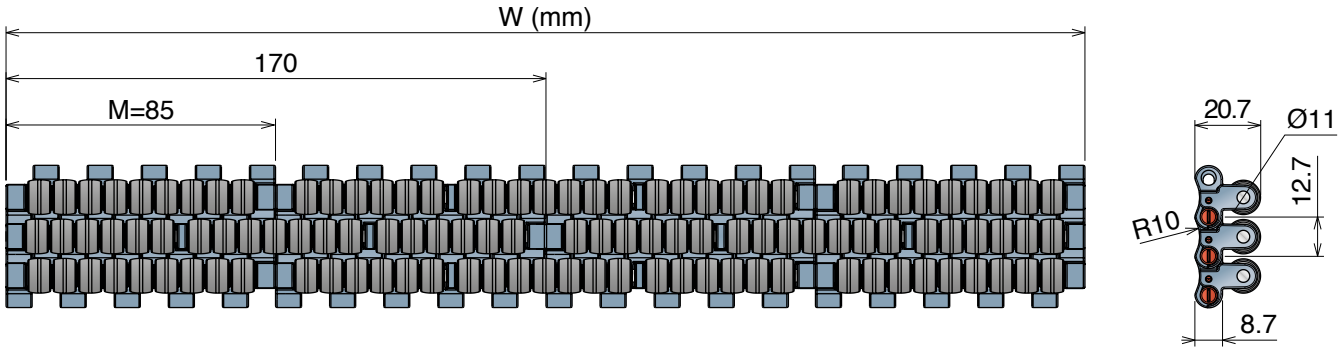

***Material**

LFA - Code 01

Low friction Acetal

Max w. load:	21500 N/m
Weight:	24,0 kg/m²
Temp. range dry:	-40÷80 °C
Temp. range wet:	1÷65 °C
Pin material:	PBT white

Version B - With 1 Positioner

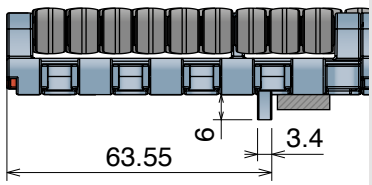

Version C - With 2 Positioner

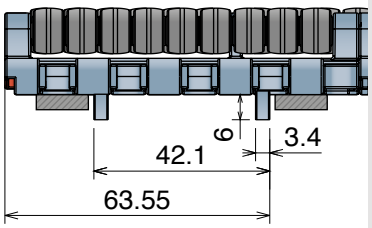

Version A - Standard

Series	Material	Width	Version
5204	01	0085	A
5204	01	0170	A
5204	01	0255	A
5204	01	0340	A
5204	01	0425	A
5204	01	0510	A
5204	01	0595	A
5204	01	0680	A
5204	01	0765	A
5204	01	0850	A
5204	01	0935	A
5204	01	1020	A
5204	01	1105	A
5204	01	1190	A
5204	01	1275	A
5204	01	1360	A
5204	01	1445	A
5204	01	1530	A

Version B - With 1 Positioner

Series	Material	Width	Version
5204	01	0085	B
5204	01	0170	B
5204	01	0255	B
5204	01	0340	B
5204	01	0425	B
5204	01	0510	B
5204	01	0595	B
5204	01	0680	B
5204	01	0765	B
5204	01	0850	B
5204	01	0935	B
5204	01	1020	B
5204	01	1105	B
5204	01	1190	B
5204	01	1275	B
5204	01	1360	B
5204	01	1445	B
5204	01	1530	B

Version C - With 2 Positioners

Series	Material	Width	Version
5204	01	0085	C
5204	01	0170	C
5204	01	0255	C
5204	01	0340	C
5204	01	0425	C
5204	01	0510	C
5204	01	0595	C
5204	01	0680	C
5204	01	0765	C
5204	01	0850	C
5204	01	0935	C
5204	01	1020	C
5204	01	1105	C
5204	01	1190	C
5204	01	1275	C
5204	01	1360	C
5204	01	1445	C
5204	01	1530	C

520 PRO LBP

Tappeto Modulare 520 PRO LBP, H=8,7 M=85
Modular Belt Series 520 PRO LBP, H=8,7 M=85 / Modulare Mattenkette 520 PRO LBP, H=8,7 M=85

CODE STRUCTURE GUIDE (Example)

Backflex radius min.: 40 mm

5209	01	0085	A
Series	*Material	Width	Version

pg. 315-316 | NoseBars 273/277/280 | pg. 651>661

SAMPLE BOX
Art.-Nr. 5210018888A

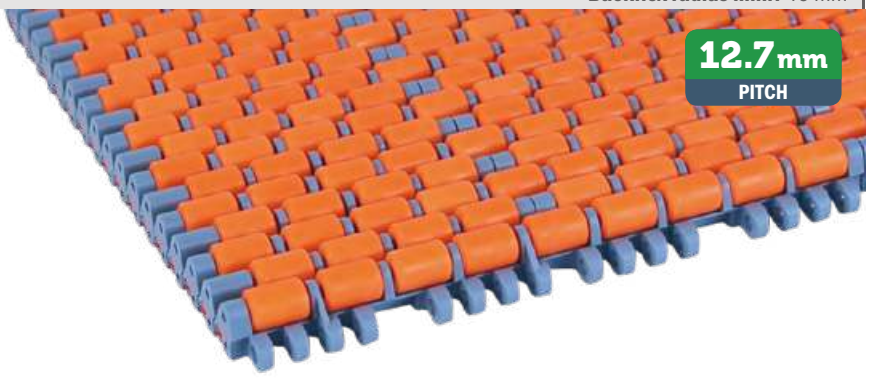

Material

LFA - Code 01
Low friction Acetal

Max w. load:	25000 N/m
Weight SS pin:	19,0 kg/m²
Weight Plastic pin:	15,3 kg/m²
Temp. range dry:	-40÷80 °C
Temp. range wet:	-40÷65 °C
Pin material:	PBT white

PFX Roller
THE BEST CHOICE TO REACH THE LOWEST FRICTION

Bottom view

Version A - Standard

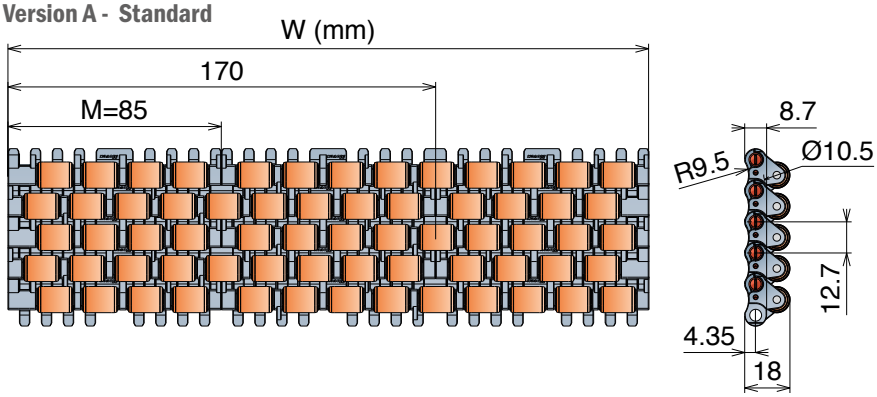

Version B - With 1 Positioner

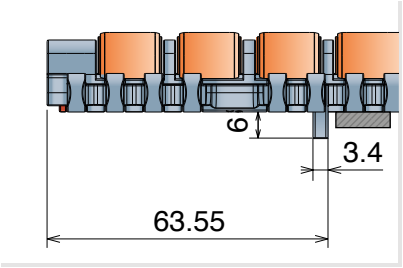

Version C - With 2 Positioner

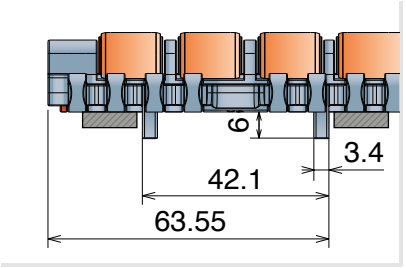

Stainless steel Pin

Series	Material	Width	Version
5209	01	0085	*
5209	01	0170	*
5209	01	0255	*
5209	01	0340	*
5209	01	0425	*
5209	01	0510	*
5209	01	0595	*
5209	01	0680	*
5209	01	0765	*
5209	01	0850	*
5209	01	0935	*
5209	01	1020	*
5209	01	1105	*
5209	01	1190	*
5209	01	1275	*
5209	01	1360	*
5209	01	1445	*
5209	01	1530	*

Plastic Pin

Series	Material	Width	Version
5210	01	0085	*
5210	01	0170	*
5210	01	0255	*
5210	01	0340	*
5210	01	0425	*
5210	01	0510	*
5210	01	0595	*
5210	01	0680	*
5210	01	0765	*
5210	01	0850	*
5210	01	0935	*
5210	01	1020	*
5210	01	1105	*
5210	01	1190	*
5210	01	1275	*
5210	01	1360	*
5210	01	1445	*
5210	01	1530	*

*Version	
Standard	Add **A**
With 1 Positioner	Add **B**
With 2 Positioners	Add **C**

Oadby Core product range
Oadby Available from stock in Leicester | Easy Available from stock in Italy | Standard Produced to order in Italy

520 M

Tappeto Modulare 520 M, H=8,7 K 330
Modular Belt Series 520 M, H=8,7 K 330 / Modulare Mattenkette 520 M, H=8,7 K 330

Part	Article-Nr.	Ref.	Weight	*Material
1193	1195019330	LFA 520 M K330	1,11	LFA
1193	1195039330	MX 520 M K330	1,11	MX
1193	1195309330	PFX 520 M K330	1,11	PFX

Backflex radius min.: 15 mm

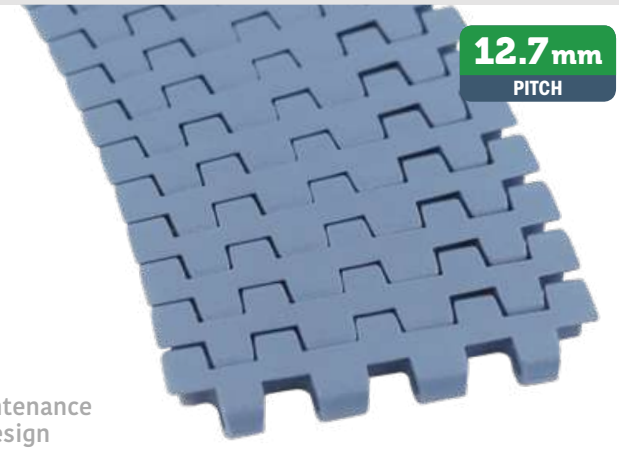

10 feet 3.048 m		NoseBars		
240 links	pg. 315-316	273/277/280	pg. 155->161	pg. 651>661

SAMPLE BOX
Art.-Nr. 1195018888A

MAGNETIC SYSTEM

Pin Sphere® AUTOLOCK
- Easier installation • Quicker maintenance
- Interchangeable with previous design

Version A - Standard

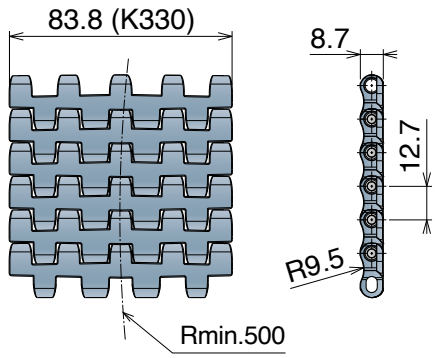

Advantages:
- No conveyor side transfers required
- Space savings
- Less components required
- Less drives required

Coventional layout

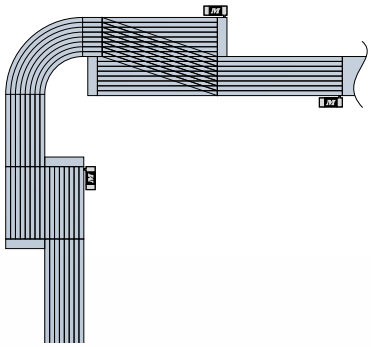

Layout with 520 M K330

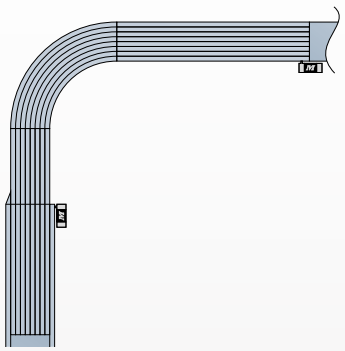

***Material**

LFA - Code 01
Low friction Acetal
Easy Delivery

Max w. load:	2500 N
Weight:	7,5 kg/m²
Temp. range dry:	-40÷80 °C
Temp. range wet:	-40÷65 °C
Pin:	Ferritic stainless steel

MX - Code 03
Performance PBT

Max w. load:	2000 N
Weight:	7,2 kg/m²
Temp. range dry:	-40÷120 °C
Temp. range wet:	-40÷60 °C
Pin:	Ferritic stainless steel

PFX - Code 30
Extra performance PBT

Max w. load:	2000 N
Weight:	7,2 kg/m²
Temp. range dry:	-40÷120 °C
Temp. range wet:	-40÷60 °C
Pin:	Ferritic stainless steel

THE BEST CHOICE FOR DRY RUNNING APPLICATIONS

NEW

520 M MOVEX TOOL

The specific tool for 520 M developed to facilitate belt assembly and disassembly.

Article Nr. 29968

Movex tools are made with 3D printer, the color may vary due to availability of the material.

Movex®

Oadby Core product range
Oadby Available from stock in Leicester
Easy Available from stock in Italy
Standard Produced to order in Italy

521/522

Pitch 12,7 mm
H= 8,7 mm

Imperial Size

Metric Size

521 FT

522 HD FT

522 HD FT *One track belt*

521 FT

Tappeto Modulare 521 FT, H=8,7 M=7,5”
Modular Belt Series 521 FT, H=8,7 M=7,5” / Modulare Mattenkette 521 FT, H=8,7 M=7,5”

CODE STRUCTURE GUIDE (Example)

Backflex radius min.: 10 mm

5311	01	9750	A
Series	*Material	Width	Version

pg. 315-316 | NoseBars 274/277/280 | pg. 651>661

*Material

LFA - Code 01
Low friction Acetal

Easy Delivery

Max w. load:	4000 N
Weight:	8,0 kg/m²
Temp. range dry:	-40÷80 °C
Temp. range wet:	-40÷65 °C
Pin material:	PBT white

MX - Code 03
Performance PBT

Max w. load:	3300 N
Weight:	7,8 kg/m²
Temp. range dry:	-40÷120 °C
Temp. range wet:	-40÷60 °C
Pin material:	POM grey

DKM - Code 16
Aramide Reinforced Acetal

Max w. load:	4000 N
Weight:	8,0 kg/m²
Temp. range dry:	-40÷80 °C
Temp. range wet:	-40÷65 °C
Pin material:	PBT white

MWX - Code 17
Polyamide Composite

Max w. load:	4000 N
Weight:	8,3 kg/m²
Temp. range dry:	-40÷104 °C
Temp. range wet:	NR
Pin material:	PBT white

MPX - Code 25
Lubricated Acetal

Max w. load:	4000 N
Weight:	8,0 kg/m²
Temp. range dry:	-40÷80 °C
Temp. range wet:	-40÷65 °C
Pin material:	PBT white

Version A - Standard

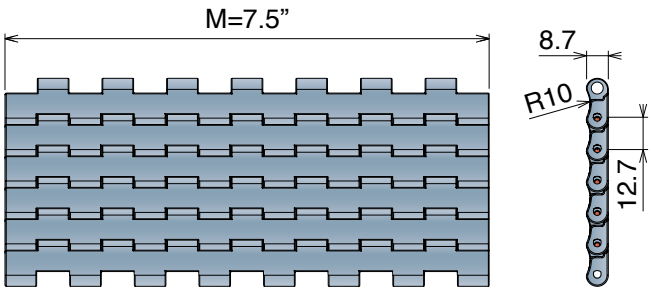

Version C - With 2 Positioner

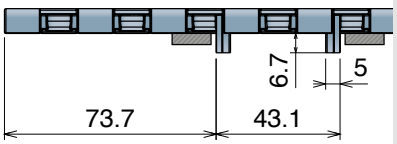

Version A - Standard

Series	Material	Width	Version
5311	*	9750	A

Version C - With 2 Positioners

Series	Material	Width	Version
5311	*	9750	C

Metric Size

NEW

522 HD FT

Tappeto Modulare 522 HD, H=8,7 M=50

Modular Belt Series 522 HD, H=8,7 M=50 / Modulare Mattenkette 522 HD, H=8,7 M=50

CODE STRUCTURE GUIDE (Example)

5271	01	0100	A
Series	*Material	Width	Version

pg. 313-314 | NoseBars 274/278/281 | pg. 651>661

Backflex radius min.: 10 mm

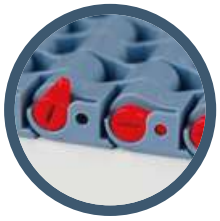

***Material**

LFA - Code 01
Low friction Acetal

Easy Delivery

Max w. load:	25500 N/m
Weight:	7,8 kg/m²
Temp. range dry:	-40÷80 °C
Temp. range wet:	-40÷65 °C
Pin material:	PBT white

MX - Code 03
Performance PBT

Max w. load:	20000 N/m
Weight:	7,5 kg/m²
Temp. range dry:	-40÷120 °C
Temp. range wet:	-40÷60 °C
Pin material:	POM grey

PFX - Code 30
Extra performance PBT

Max w. load:	20000 N/m
Weight:	7,5 kg/m²
Temp. range dry:	-40÷120 °C
Temp. range wet:	-40÷60 °C
Pin material:	POM grey

THE BEST CHOICE FOR DRY RUNNING APPLICATIONS

Version A - Standard

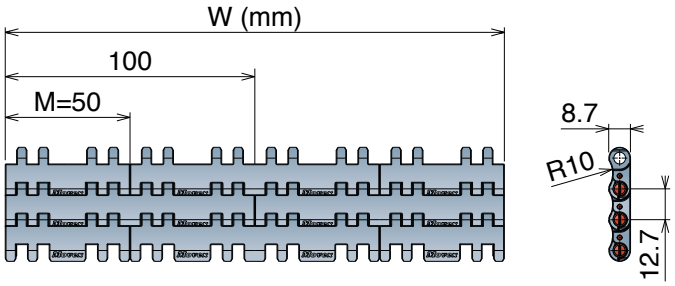

Version C - With 2 Positioner

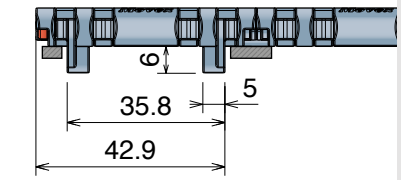

Version A - Standard

Series	Material	Width	Version
5271	*	0100**	A
5271	*	0150	A
5271	*	0200	A
5271	*	0250	A
5271	*	0300	A

Version C - With 2 Positioners

Series	Material	Width	Version
5271	*	0100**	C
5271	*	0150	C
5271	*	0200	C
5271	*	0250	C
5271	*	0300	C

** Belt assembled with Pin Sphere.

NEW

522 HD One track belt MOVEX TOOL

The specific tool for belts developed to facilitate belt assembly and disassembly, perfectly compatible also with all 522 HD One-Track belt versions (See next page).

Article Nr. 29971

Movex tools are made with 3D printer, the color may vary due to availability of the material.

Oadby Core product range
Oadby Available from stock in Leicester | Easy Available from stock in Italy | Standard Produced to order in Italy

Movex

NEW

522 HD FT *One track Belt* Tappeto Modulare 522 HD, H=8,7

Modular Belt Series 522 HD, H=8,7 / Modulare Mattenkette 522 HD, H=8,7

CODE STRUCTURE GUIDE (Example) — **Backflex radius min.:** 10 mm

5271	01	9115	A
Series	*Material	Width	Version

pg. 313-314 | NoseBars 274/278/281 | pg. 651>661

SAMPLE BOX — Art.-Nr. 5271018888A

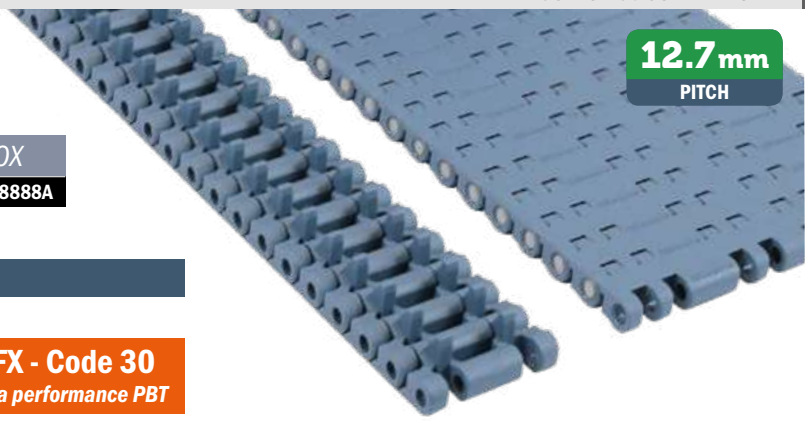

***Material**

Easy Delivery

LFA - Code 01 *Low friction Acetal*	MX - Code 03 *Performance PBT*	PFX - Code 30 *Extra performance PBT*
Max w. load: See table below	**Max w. load:** See table below	**Max w. load:** See table below
Weight: 7,8 kg/m²	**Weight:** 7,5 kg/m²	**Weight:** 7,5 kg/m²
Temp. range dry: -40÷80 °C	**Temp. range dry:** -40÷120 °C	**Temp. range dry:** -40÷120 °C
Temp. range wet: -40÷65 °C	**Temp. range wet:** -40÷60 °C	**Temp. range wet:** -40÷60 °C
Pin material: PBT white	**Pin material:** POM black	**Pin material:** POM black

Pin Sphere® AUTOLOCK
- Easier installation
- Quicker maintenance
- High strength

Width 29 mm

Version A - Standard

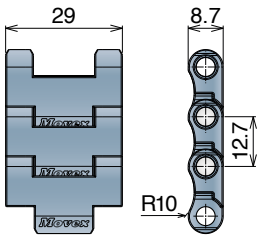

Version C - With 2 Positioner

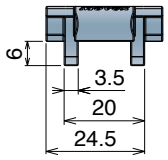

Series	Material	Width	Version
5271	*	9115	A
5271	*	9115	C

Width 34 mm

Version A - Standard

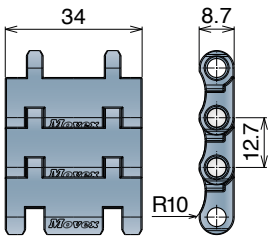

Version C - With 2 Positioner

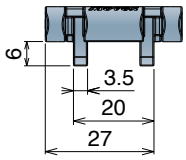

Series	Material	Width	Version
5271	*	9134	A
5271	*	9134	C

Width 37 mm

Version A - Standard

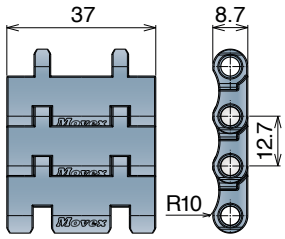

Version C - With 2 Positioner

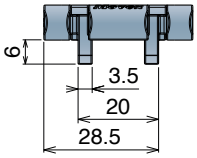

Series	Material	Width	Version
5271	*	9145	A
5271	*	9145	C

Width 51 mm

Version A - Standard

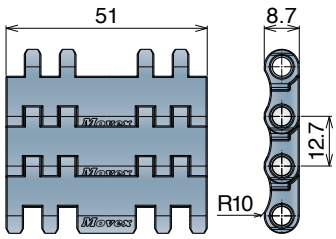

Version C - With 2 Positioner

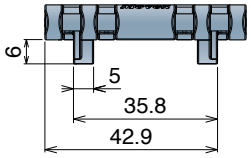

Series	Material	Width	Version
5271	*	9200	A
5271	*	9200	C

Width 76 mm

Version A - Standard

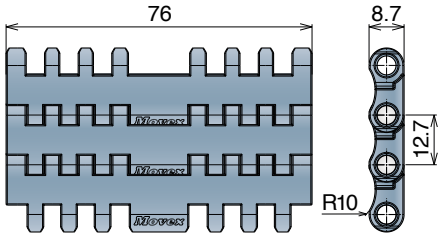

Version C - With 2 Positioner

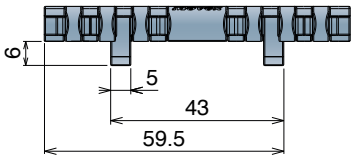

Series	Material	Width	Version
5271	*	9300	A
5271	*	9300	C

Max working load (N)

Width	29	34	37	51	76
LFA	600	870	945	1300	2000
MX	450	680	740	1020	1520
PFX	450	680	740	1020	1520

590

Pitch 19,05 mm
H= 8,7 mm

590 FT
590 FT *One track Belt*
590 FTT

590 FT

Tappeto Modulare 590 FT, H=8,7 M=3”
Modular Belt Series 590 FT, H=8,7 M=3” / Modulare Mattenkette 590 FT, H=8,7 M=3”

CODE STRUCTURE GUIDE (Example)

Backflex radius min.: 25 mm

5301	01	0003	A
Series	*Material	Width	Version

pg. 318 pg. 651>661

SAMPLE BOX
Art.-Nr. 5301018888A

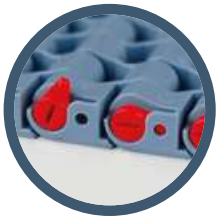

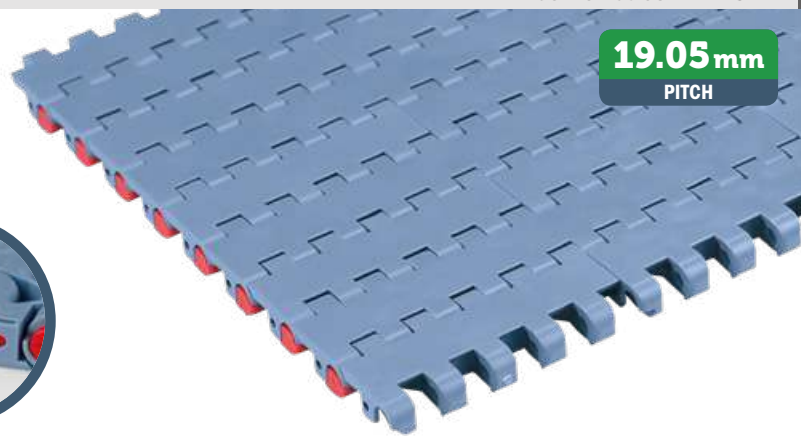

***Material**

LFA - Code 01
Low friction Acetal
Easy Delivery

Max w. load:	30000 N/m
Weight:	7,2 kg/m²
Temp. range dry:	-40÷80 °C
Temp. range wet:	-40÷65 °C
Pin material:	PBT white

MX - Code 03
Performance PBT

Max w. load:	24000 N/m
Weight:	7,0 kg/m²
Temp. range dry:	-40÷120 °C
Temp. range wet:	-40÷60 °C
Pin material:	POM grey

MPX - Code 25
Lubricated Acetal

Max w. load:	30000 N/m
Weight:	7,2 kg/m²
Temp. range dry:	-40÷80 °C
Temp. range wet:	-40÷65 °C
Pin material:	PBT white

Version A - Standard

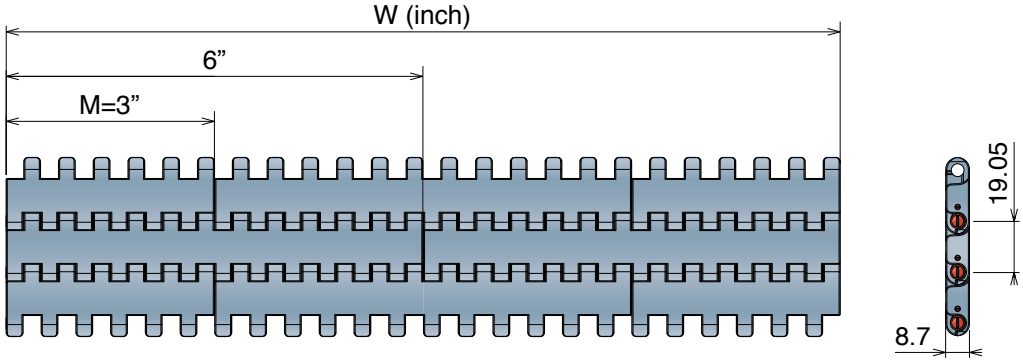

Version C - With 2 Positioner

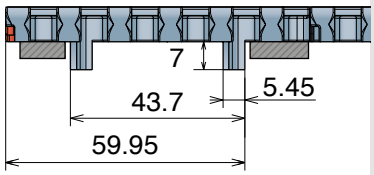

Version A - Standard

Series	Material	Width	Version
5301	*	0003	A
5301	*	0006	A
5301	*	0009	A
5301	*	0012	A
5301	*	0015	A
5301	*	0018	A
5301	*	0021	A
5301	*	0024	A
5301	*	0027	A
5301	*	0030	A
5301	*	0033	A
5301	*	0036	A
5301	*	0039	A
5301	*	0042	A
5301	*	0045	A
5301	*	0048	A
5301	*	0051	A
5301	*	0054	A

Version C - With 2 Positioners

Series	Material	Width	Version
5301	*	0003	C
5301	*	0006	C
5301	*	0009	C
5301	*	0012	C
5301	*	0015	C
5301	*	0018	C
5301	*	0021	C
5301	*	0024	C
5301	*	0027	C
5301	*	0030	C
5301	*	0033	C
5301	*	0036	C
5301	*	0039	C
5301	*	0042	C
5301	*	0045	C
5301	*	0048	C
5301	*	0051	C
5301	*	0054	C

590 FT *One track Belt* Tappeto Modulare 590 FT, H=8,7

Modular Belt Series 590 FT, H=8,7 / Modulare Mattenkette 590 FT, H=8,7

CODE STRUCTURE GUIDE (Example)

Backflex radius min.: 25 mm

5301	01	9325	A
Series	*Material	Width	Version

pg. 318 pg. 651>661

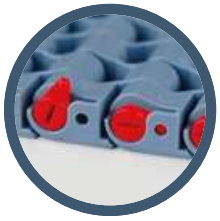

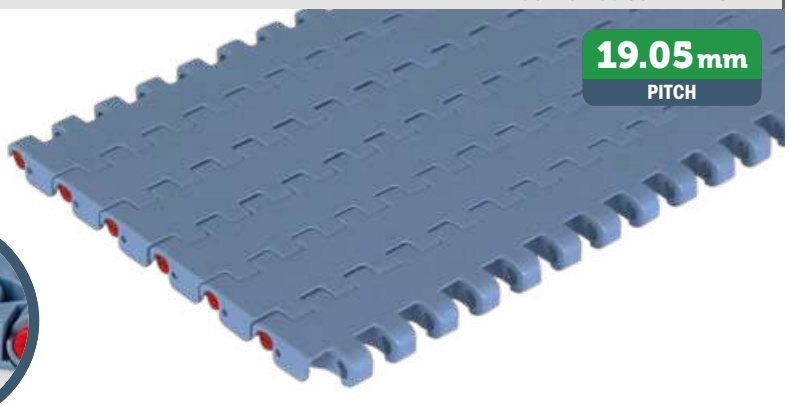

Version A - Standard

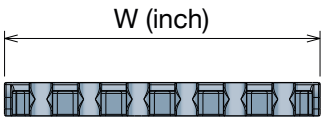

Version C - With 2 Positioner

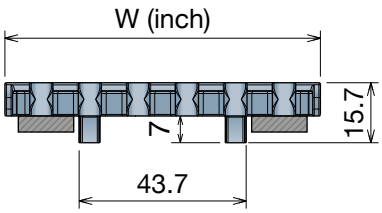

***Material**

LFA - Code 01
Low friction Acetal

Easy Delivery

Weight: 7,2 kg/m²
Temp. range dry: -40÷80 °C
Temp. range wet: -40÷65 °C
Pin material: PBT white

MX - Code 03
Performance PBT

Weight: 7,0 kg/m²
Temp. range dry: -40÷120 °C
Temp. range wet: -40÷60 °C
Pin material: POM grey

MPX - Code 25
Lubricated Acetal

Weight: 7,2 kg/m²
Temp. range dry: -40÷80 °C
Temp. range wet: -40÷65 °C
Pin material: PBT white

Max working load (N)

Width	K325	K450	K750
LFA	2500	3400	5700
MX	2000	2800	4500
MPX	2500	3400	5700

K325 - One track belt

Series	Material	Width	Version
5301	*	9325	A
5301	*	9325	C

K450 - One track belt

Series	Material	Width	Version
5301	*	9450	A
5301	*	9450	C

K750 - One track belt

Series	Material	Width	Version
5301	*	9750	A
5301	*	9750	C

Oadby Core product range
Oadby Available from stock in Leicester
Easy Available from stock in Italy
Standard Produced to order in Italy

590 FTT

Tappeto Modulare 590 FTT, H=8,7
Modular Belt Series 590 FTT, H=8,7 / Modulare Mattenkette 590 FTT, H=8,7

CODE STRUCTURE GUIDE (Example)

Backflex radius min.: 25 mm

5306	01	9450	C-R
Series	*Material	Width	Version

pg. 318 pg. 651>661

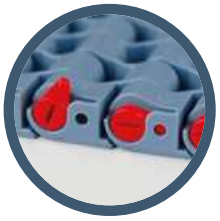

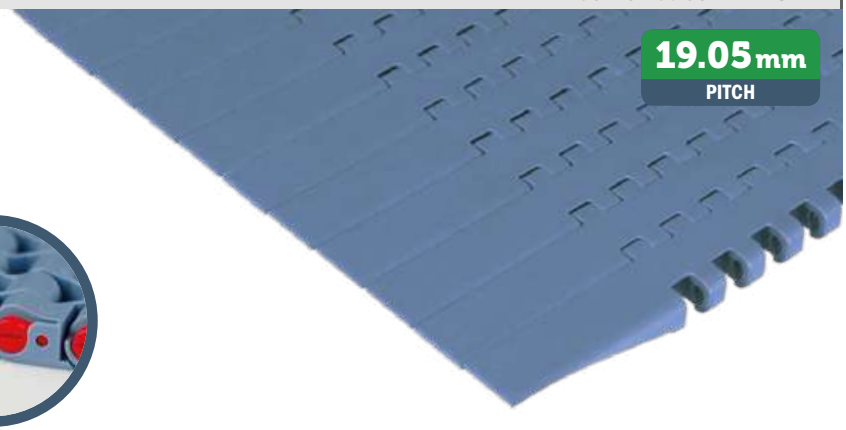

*Material

LFA - Code 01
Low friction Acetal

Weight:	7,2 kg/m²
Temp. range dry:	-40÷80 °C
Temp. range wet:	-40÷65 °C
Pin material:	PBT white

MX - Code 03
Performance PBT

Weight:	7,0 kg/m²
Temp. range dry:	-40÷120 °C
Temp. range wet:	-40÷60 °C
Pin material:	POM grey

MPX - Code 25
Lubricated Acetal

Weight:	7,2 kg/m²
Temp. range dry:	-40÷80 °C
Temp. range wet:	-40÷65 °C
Pin material:	PBT white

Max working load (N)

Width	K450	K750
LFA	3400	5700
MX	2800	4500
MPX	3400	5700

Version 590 FTT DX

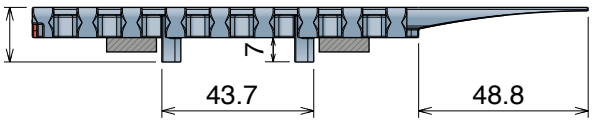

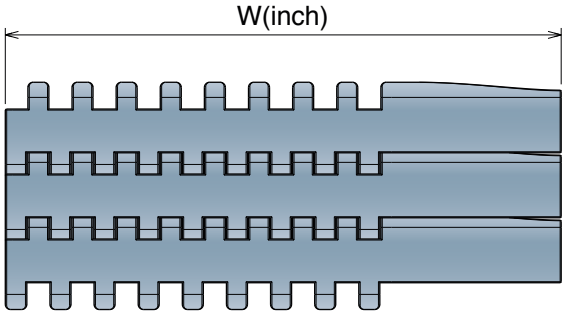

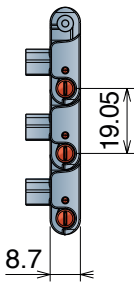

Version 590 FTT SX

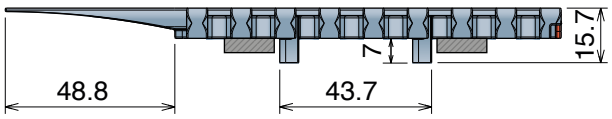

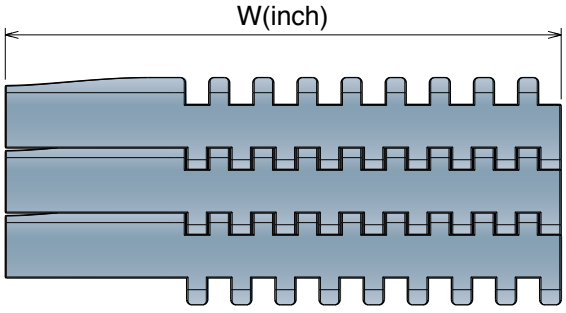

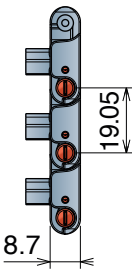

Version 590 FTT DX

Series	Material	Width	Version	Total width
5306	*	9450	C-R	160.0
5306	*	9750	C-R	236.2

Version 590 FTT SX

Series	Material	Width	Version	Total width
5306	*	9450	C-L	160.0
5306	*	9750	C-L	236.2

525

Pitch 15,0 mm
H= 8,7 mm

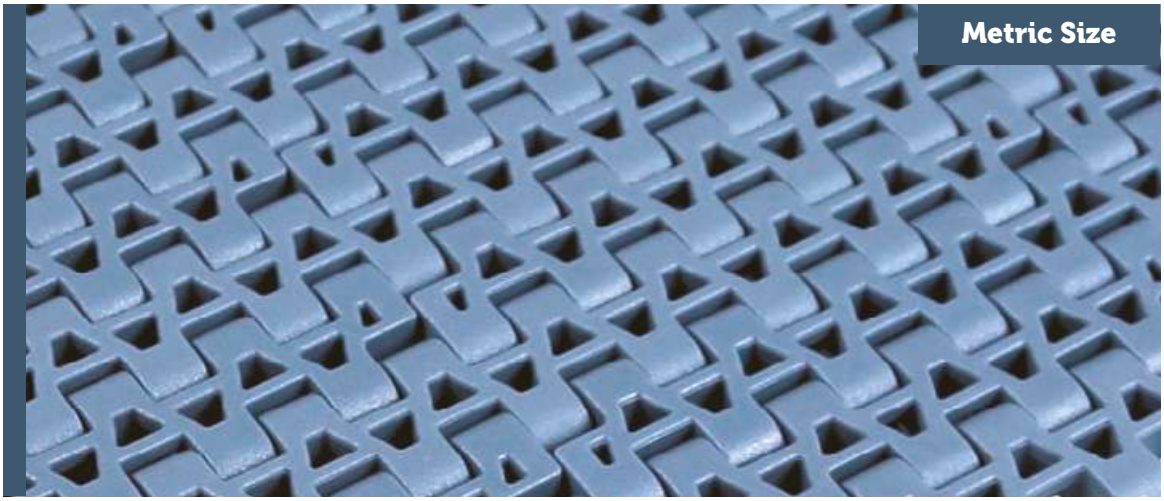

525 HD FT
525 HD FT+RIB
525 FTT
525 HD FG
525 HD GT
525 HD GT *Side Indent*

525 HD FT

Tappeto Modulare 525 HD, H=8,7 M=85

Modular Belt Series 525 HD, H=8,7 M=85 / Modulare Mattenkette 525 HD, H=8,7 M=85

CODE STRUCTURE GUIDE (Example)

Backflex radius min.: 25 mm

5261	01	0085	A
Series	*Material	Width	Version

pg. 317 | NoseBars 273/277/280 | pg. 651>661

SAMPLE BOX
Art.-Nr. **5261018888A**

REINFORCED POSITIONER

***Material**

LFA - Code 01
Low friction Acetal

Easy Delivery

Max w. load:	25500 N/m
Weight:	9,0 kg/m²
Temp. range dry:	-40÷80 °C
Temp. range wet:	-40÷65 °C
Pin material:	PBT white

PP - Code 02
Polypropylene

Max w. load:	15500 N/m
Weight:	8,7 kg/m²
Temp. range dry:	4÷104 °C
Temp. range wet:	4÷104 °C
Pin material:	PP blue

MX - Code 03
Performance PBT

Max w. load:	20500 N/m
Weight:	8,7 kg/m²
Temp. range dry:	-40÷120 °C
Temp. range wet:	-40÷60 °C
Pin material:	POM grey

LFB - Code 23
Low friction Acetal

Max w. load:	25500 N/m
Weight:	9,0 kg/m²
Temp. range dry:	-40÷80 °C
Temp. range wet:	-40÷65 °C
Pin material:	PBT white

PFX - Code 30
Extra performance PBT

Max w. load:	20500 N/m
Weight:	8,7 kg/m²
Temp. range dry:	-40÷120 °C
Temp. range wet:	-40÷60 °C
Pin material:	POM grey

THE BEST CHOICE FOR DRY RUNNING APPLICATIONS

Version A - Standard

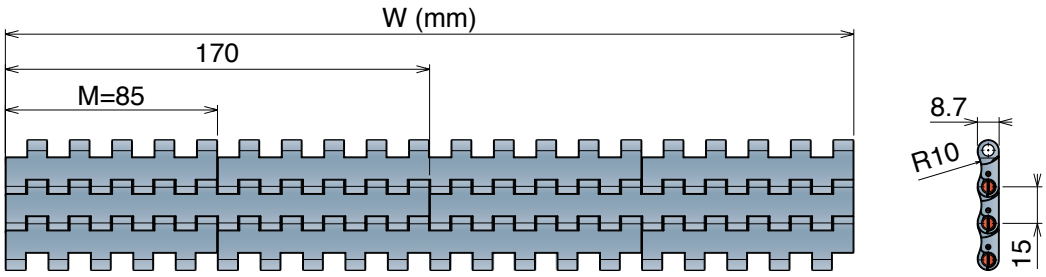

Version B - With 1 Positioner

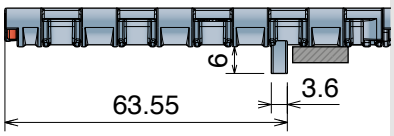

Version C - With 2 Positioner

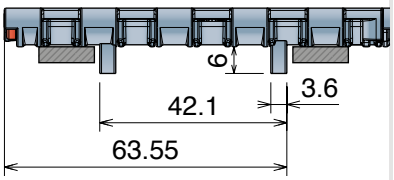

Version A - Standard

Series	Material	Width	Version
5261	*	0085	A
5261	*	0170	A
5261	*	0255	A
5261	*	0340	A
5261	*	0425	A
5261	*	0510	A
5261	*	0595	A
5261	*	0680	A
5261	*	0765	A
5261	*	0850	A
5261	*	0935	A
5261	*	1020	A
5261	*	1105	A
5261	*	1190	A
5261	*	1275	A
5261	*	1360	A
5261	*	1445	A
5261	*	1530	A

Version B - With 1 Positioner

Series	Material	Width	Version
5261	*	0085	B
5261	*	0170	B
5261	*	0255	B
5261	*	0340	B
5261	*	0425	B
5261	*	0510	B
5261	*	0595	B
5261	*	0680	B
5261	*	0765	B
5261	*	0850	B
5261	*	0935	B
5261	*	1020	B
5261	*	1105	B
5261	*	1190	B
5261	*	1275	B
5261	*	1360	B
5261	*	1445	B
5261	*	1530	B

Version C - With 2 Positioners

Series	Material	Width	Version
5261	*	0085	C
5261	*	0170	C
5261	*	0255	C
5261	*	0340	C
5261	*	0425	C
5261	*	0510	C
5261	*	0595	C
5261	*	0680	C
5261	*	0765	C
5261	*	0850	C
5261	*	0935	C
5261	*	1020	C
5261	*	1105	C
5261	*	1190	C
5261	*	1275	C
5261	*	1360	C
5261	*	1445	C
5261	*	1530	C

Metric Size

525 HD FT + *RIB*

Tappeto Modulare 525 HD, H=8,7 M=85

Modular Belt Series 525 HD, H=8,7 M=85 / Modulare Mattenkette 525 HD, H=8,7 M=85

CODE STRUCTURE GUIDE (Example)

Backflex radius min.: 25 mm

5261	01	0085	A	XR3
Series	*Material	Width	Version	RIB

pg. 317 | NoseBars 273/277/280 | pg. 651>661

***Material**

LFA - Code 01
Low friction Acetal

Max w. load:	25500 N/m
Weight:	9,0 kg/m²
Temp. range dry:	-40÷80 °C
Temp. range wet:	-40÷65 °C
Pin material:	PBT white

MX - Code 03
Performance PBT

Max w. load:	20500 N/m
Weight:	8,7 kg/m²
Temp. range dry:	-40÷120 °C
Temp. range wet:	-40÷60 °C
Pin material:	POM grey

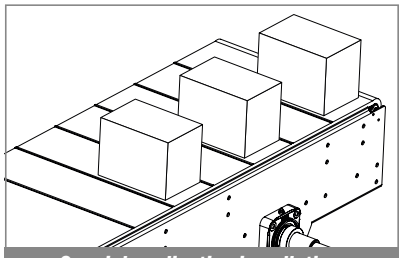

Special application in palletizer

Version A - Standard

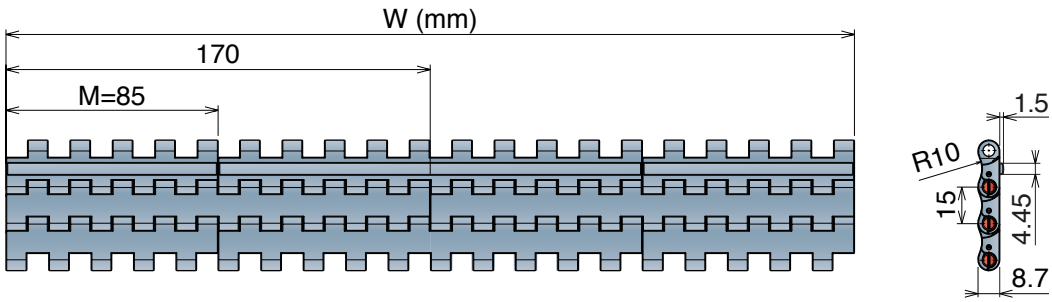

Version B - With 1 Positioner

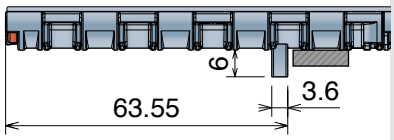

Version C - With 2 Positioner

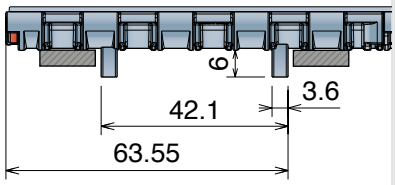

Version A - Standard

Series	Material	Width	Version	RIB
5261	*	0085	A	XR3 or XR5
5261	*	0170	A	XR3 or XR5
5261	*	0255	A	XR3 or XR5
5261	*	0340	A	XR3 or XR5
5261	*	0425	A	XR3 or XR5
5261	*	0510	A	XR3 or XR5
5261	*	0595	A	XR3 or XR5
5261	*	0680	A	XR3 or XR5
5261	*	0765	A	XR3 or XR5
5261	*	0850	A	XR3 or XR5
5261	*	0935	A	XR3 or XR5
5261	*	1020	A	XR3 or XR5
5261	*	1105	A	XR3 or XR5
5261	*	1190	A	XR3 or XR5
5261	*	1275	A	XR3 or XR5
5261	*	1360	A	XR3 or XR5
5261	*	1445	A	XR3 or XR5
5261	*	1530	A	XR3 or XR5

XR3 *(RIB every 3 links)* | **XR5** *(RIB every 5 links)*

Version B - With 1 Positioner

Series	Material	Width	Version	RIB
5261	*	0085	B	XR3 or XR5
5261	*	0170	B	XR3 or XR5
5261	*	0255	B	XR3 or XR5
5261	*	0340	B	XR3 or XR5
5261	*	0425	B	XR3 or XR5
5261	*	0510	B	XR3 or XR5
5261	*	0595	B	XR3 or XR5
5261	*	0680	B	XR3 or XR5
5261	*	0765	B	XR3 or XR5
5261	*	0850	B	XR3 or XR5
5261	*	0935	B	XR3 or XR5
5261	*	1020	B	XR3 or XR5
5261	*	1105	B	XR3 or XR5
5261	*	1190	B	XR3 or XR5
5261	*	1275	B	XR3 or XR5
5261	*	1360	B	XR3 or XR5
5261	*	1445	B	XR3 or XR5
5261	*	1530	B	XR3 or XR5

XR3 *(RIB every 3 links)* | **XR5** *(RIB every 5 links)*

Version C - With 2 Positioners

Series	Material	Width	Version	RIB
5261	*	0085	C	XR3 or XR5
5261	*	0170	C	XR3 or XR5
5261	*	0255	C	XR3 or XR5
5261	*	0340	C	XR3 or XR5
5261	*	0425	C	XR3 or XR5
5261	*	0510	C	XR3 or XR5
5261	*	0595	C	XR3 or XR5
5261	*	0680	C	XR3 or XR5
5261	*	0765	C	XR3 or XR5
5261	*	0850	C	XR3 or XR5
5261	*	0935	C	XR3 or XR5
5261	*	1020	C	XR3 or XR5
5261	*	1105	C	XR3 or XR5
5261	*	1190	C	XR3 or XR5
5261	*	1275	C	XR3 or XR5
5261	*	1360	C	XR3 or XR5
5261	*	1445	C	XR3 or XR5
5261	*	1530	C	XR3 or XR5

XR3 *(RIB every 3 links)* | **XR5** *(RIB every 5 links)*

Oadby Core product range
Oadby Available from stock in Leicester | Easy Available from stock in Italy | Standard Produced to order in Italy

Movex

525 FTT

Tappeto Modulare 525 FTT, H=8,7 M=85
Modular Belt Series 525 FTT, H=8,7 M=85 / Modulare Mattenkette 525 FTT, H=8,7 M=85

CODE STRUCTURE GUIDE (Example)

Backflex radius min.: 25 mm

5256	01	0085	C
Series	*Material	Width	Version

pg. 317 | NoseBars 273/277/280 | pg. 651>661

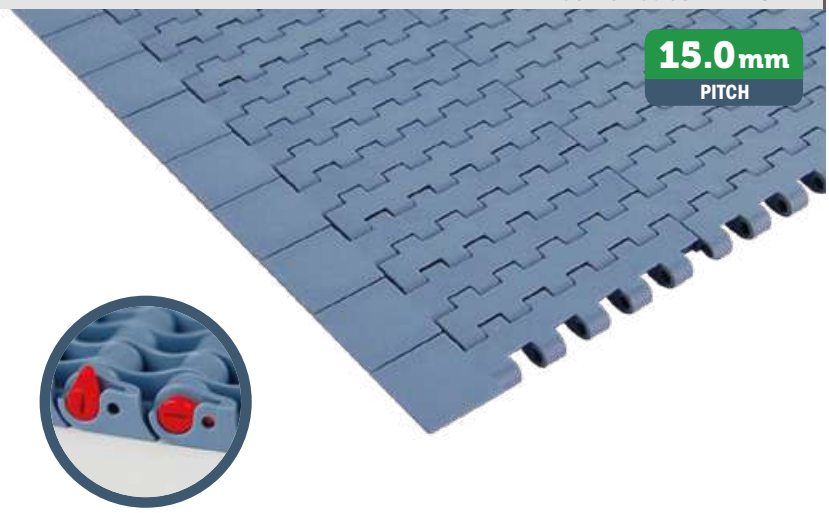

***Material**

LFA - Code 01 *Low friction Acetal*		MX - Code 03 *Performance PBT*	
Max w. load:	21500 N/m	**Max w. load:**	17500 N/m
Weight:	7,8 kg/m²	**Weight:**	7,5 kg/m²
Temp. range dry:	-40÷80 °C	**Temp. range dry:**	-40÷120 °C
Temp. range wet:	-40÷65 °C	**Temp. range wet:**	-40÷60 °C
Pin material:	PBT white	**Pin material:**	POM grey

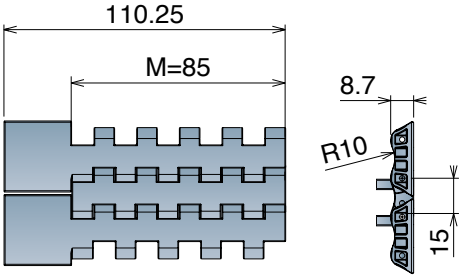

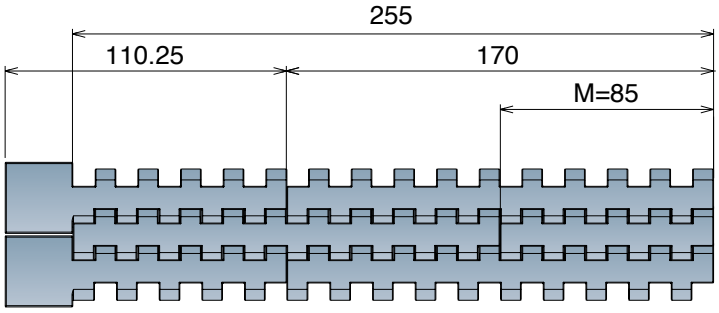

Version C

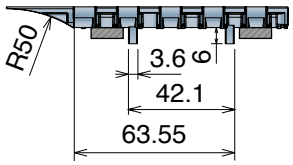

Version CN - Near

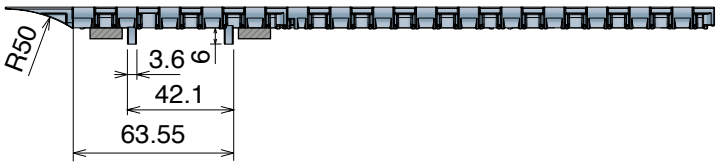

Version C

Series	Material	Width	Version
5256	*	0085	C

Version CO - Opposite

Max working load (N)	
Width	85
LFA	1850
MX	1500

Version CN - Near

Series	Material	Width	Version
5256	*	0170	CN
5256	*	0255	CN

Version CO - Opposite

Series	Material	Width	Version
5256	*	0170	CO
5256	*	0255	CO

Metric Size

525 HD FG Open Surface 35% Tappeto Modulare 525 HD Flush grid, H=8,7 M=85

Modular Belt Series 525 HD Flush grid, H=8,7 M=85 / Modulare Mattenkette 525 HD Flush grid, H=8,7 M=85

CODE STRUCTURE GUIDE (Example)

Backflex radius min.: 25 mm

5262	01	0085	A
Series	*Material	Width	Version

pg. 317 | 273/277/280 | pg. 651>661

SAMPLE BOX
Art.-Nr. 5262018888A

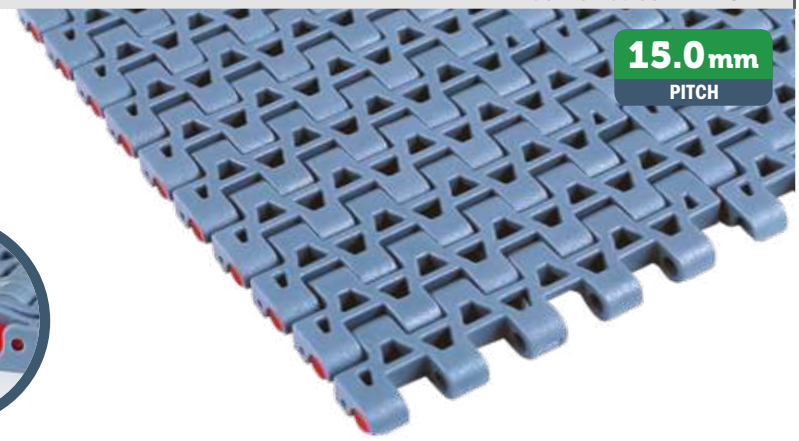

*Material

LFA - Code 01
Low friction Acetal

Easy Delivery

Max w. load:	25500 N/m
Weight:	8,1 kg/m²
Temp. range dry:	-40÷80 °C
Temp. range wet:	-40÷65 °C
Pin material:	PBT white

MX - Code 03
Performance PBT

Max w. load:	20500 N/m
Weight:	7,8 kg/m²
Temp. range dry:	-40÷120 °C
Temp. range wet:	-40÷60 °C
Pin material:	POM grey

LFB - Code 23
Low friction Acetal

Max w. load:	25500 N/m
Weight:	8,1 kg/m²
Temp. range dry:	-40÷80 °C
Temp. range wet:	-40÷65 °C
Pin material:	PBT white

PFX - Code 30
Extra performance PBT

Max w. load:	20500 N/m
Weight:	7,8 kg/m²
Temp. range dry:	-40÷120 °C
Temp. range wet:	-40÷60 °C
Pin material:	POM grey

THE BEST CHOICE FOR DRY RUNNING APPLICATIONS

Version A - Standard

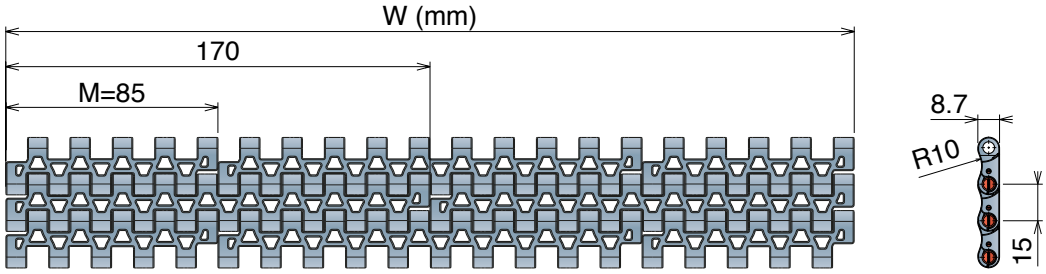

Version B - With 1 Positioner

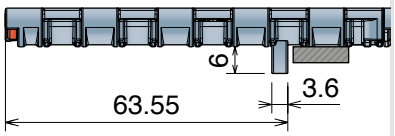

Version C - With 2 Positioner

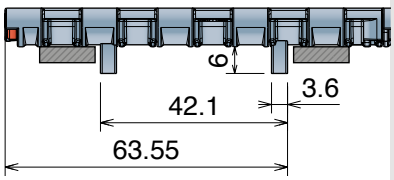

Version A - Standard

Series	Material	Width	Version
5262	*	0085	A
5262	*	0170	A
5262	*	0255	A
5262	*	0340	A
5262	*	0425	A
5262	*	0510	A
5262	*	0595	A
5262	*	0680	A
5262	*	0765	A
5262	*	0850	A
5262	*	0935	A
5262	*	1020	A
5262	*	1105	A
5262	*	1190	A
5262	*	1275	A
5262	*	1360	A
5262	*	1445	A
5262	*	1530	A

Version B - With 1 Positioner

Series	Material	Width	Version
5262	*	0085	B
5262	*	0170	B
5262	*	0255	B
5262	*	0340	B
5262	*	0425	B
5262	*	0510	B
5262	*	0595	B
5262	*	0680	B
5262	*	0765	B
5262	*	0850	B
5262	*	0935	B
5262	*	1020	B
5262	*	1105	B
5262	*	1190	B
5262	*	1275	B
5262	*	1360	B
5262	*	1445	B
5262	*	1530	B

Version C - With 2 Positioners

Series	Material	Width	Version
5262	*	0085	C
5262	*	0170	C
5262	*	0255	C
5262	*	0340	C
5262	*	0425	C
5262	*	0510	C
5262	*	0595	C
5262	*	0680	C
5262	*	0765	C
5262	*	0850	C
5262	*	0935	C
5262	*	1020	C
5262	*	1105	C
5262	*	1190	C
5262	*	1275	C
5262	*	1360	C
5262	*	1445	C
5262	*	1530	C

Oadby Core product range
Oadby Available from stock in Leicester
Easy Available from stock in Italy
Standard Produced to order in Italy

525 HD GT

Tappeto Modulare 525 HD GT, H=8,7 M=85

Modular Belt Series 525 HD GT, H=8,7 M=85 / Modulare Mattenkette 525 HD GT, H=8,7 M=85

CODE STRUCTURE GUIDE (Example)

Backflex radius min.: 25 mm

5263	01	0085	A
Series	*Material	Width	Version

pg. 317 | NoseBars 273/277/280 | pg. 651>661

SAMPLE BOX
Art.-Nr. 5263018888A

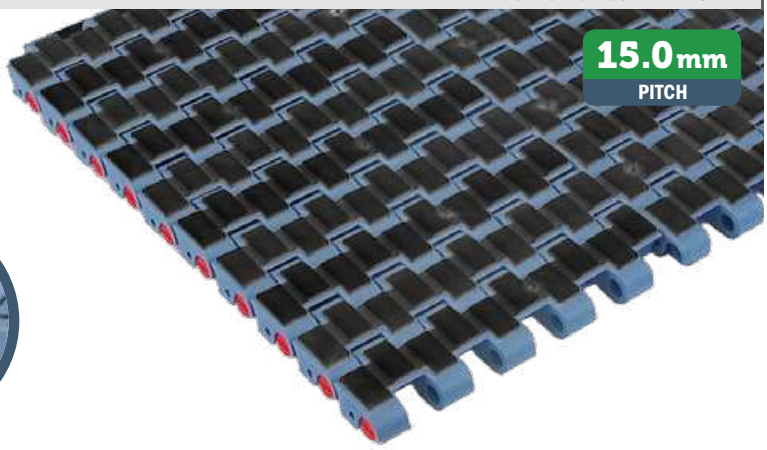

*Material

LFA - Code 01
Low friction Acetal

Easy Delivery

Max w. load: 25500 N/m
Weight: 10,35 kg/m²
Temp. range dry: -40÷80 °C
Temp. range wet: -40÷65 °C
Pin material: PBT white
Top rubber: 50 ShA- Dark grey

PP - Code 02
Polypropylene

Max w. load: 15500 N/m
Weight: 8,7 kg/m²
Temp. range dry: 4÷80 °C
Temp. range wet: 4÷80 °C
Pin material: PP blue
Top rubber: 50 ShA- Pigeon blue

MX - Code 03
Performance PBT

Max w. load: 20500 N/m
Weight: 10,35 kg/m²
Temp. range dry: -40÷120 °C
Temp. range wet: -40÷60 °C
Pin material: POM grey
Top rubber: 50 ShA- Dark grey

Version A - Standard

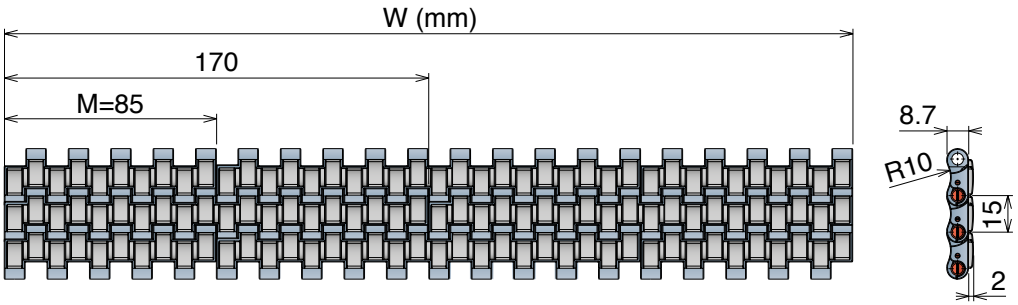

Version B - With 1 Positioner

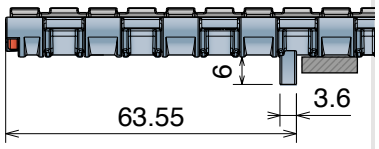

Version C - With 2 Positioner

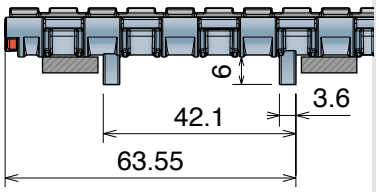

Version A - Standard

Series	Material	Width	Version
5263	*	0085	A
5263	*	0170	A
5263	*	0255	A
5263	*	0340	A
5263	*	0425	A
5263	*	0510	A
5263	*	0595	A
5263	*	0680	A
5263	*	0765	A
5263	*	0850	A
5263	*	0935	A
5263	*	1020	A
5263	*	1105	A
5263	*	1190	A
5263	*	1275	A
5263	*	1360	A
5263	*	1445	A
5263	*	1530	A

Version B - With 1 Positioner

Series	Material	Width	Version
5263	*	0085	B
5263	*	0170	B
5263	*	0255	B
5263	*	0340	B
5263	*	0425	B
5263	*	0510	B
5263	*	0595	B
5263	*	0680	B
5263	*	0765	B
5263	*	0850	B
5263	*	0935	B
5263	*	1020	B
5263	*	1105	B
5263	*	1190	B
5263	*	1275	B
5263	*	1360	B
5263	*	1445	B
5263	*	1530	B

Version C - With 2 Positioners

Series	Material	Width	Version
5263	*	0085	C
5263	*	0170	C
5263	*	0255	C
5263	*	0340	C
5263	*	0425	C
5263	*	0510	C
5263	*	0595	C
5263	*	0680	C
5263	*	0765	C
5263	*	0850	C
5263	*	0935	C
5263	*	1020	C
5263	*	1105	C
5263	*	1190	C
5263	*	1275	C
5263	*	1360	C
5263	*	1445	C
5263	*	1530	C

525 HD GT *Side Indent*

Tappeto Modulare 525 HD GT Side Indent, H=8,7 M=85

Modular Belt Series 525* HD GT Side Indent, *H=8,7 M=85* / *Modulare Mattenkette 525* HD GT Side Indent, *H=8,7 M=85

CODE STRUCTURE GUIDE (Example)

Backflex radius min.: 25 mm

5265	01	0255	A
Series	*Material	Width	Version

pg. 317 | NoseBars 273/277/280 | pg. 651>661

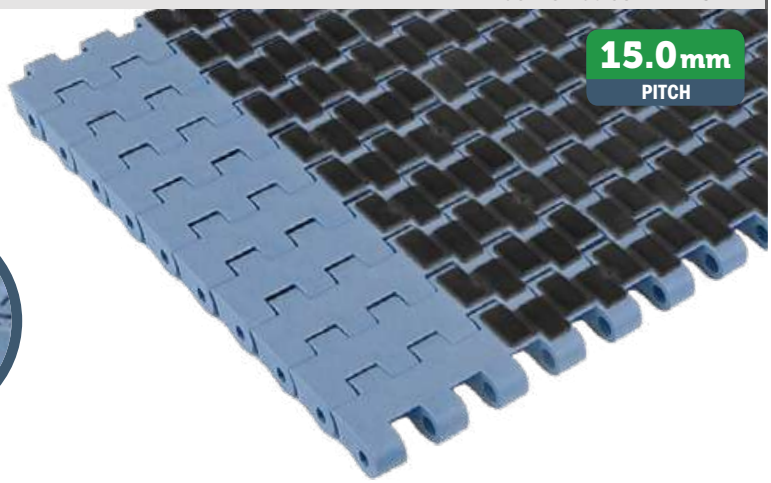

***Material**

LFA - Code 01
Low friction Acetal

Easy Delivery

Max w. load: 25500 N/m
Weight: 10,35 kg/m²
Temp. range dry: -40÷80 °C
Temp. range wet: -40÷65 °C
Pin material: PBT white
Top rubber: 50 ShA- Dark grey

PP - Code 02
Polypropylene

Max w. load: 15500 N/m
Weight: 8,7 kg/m²
Temp. range dry: 4÷80 °C
Temp. range wet: 4÷80 °C
Pin material: PP blue
Top rubber: 50 ShA- Pigeon blue

MX - Code 03
Performance PBT

Max w. load: 20500 N/m
Weight: 10,35 kg/m²
Temp. range dry: -40÷120 °C
Temp. range wet: -40÷60 °C
Pin material: POM grey
Top rubber: 50 ShA- Dark grey

Version A - Standard

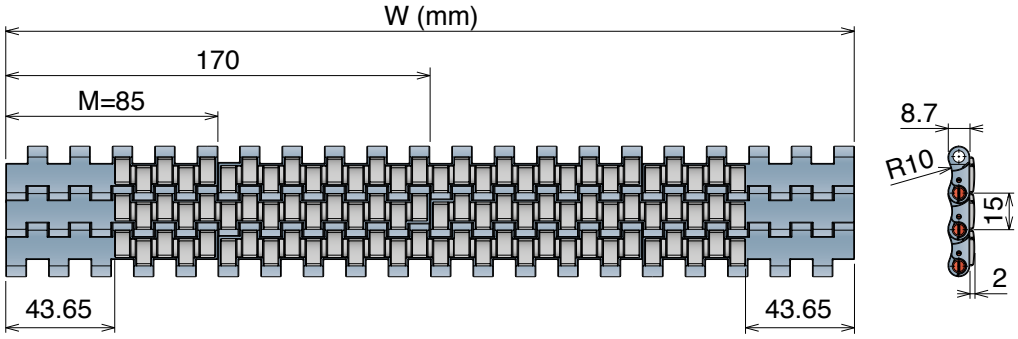

Version B - With 1 Positioner

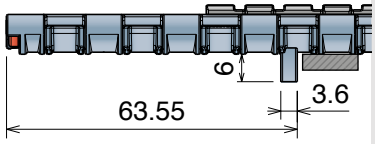

Version C - With 2 Positioner

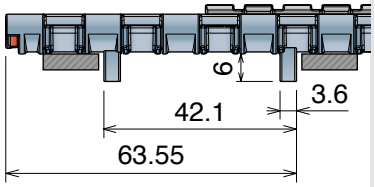

Version A - Standard

Series	Material	Width	Version
5265	*	0255	A
5265	*	0340	A
5265	*	0425	A
5265	*	0510	A
5265	*	0595	A
5265	*	0680	A
5265	*	0765	A
5265	*	0850	A
5265	*	0935	A
5265	*	1020	A
5265	*	1105	A
5265	*	1190	A
5265	*	1275	A
5265	*	1360	A
5265	*	1445	A
5265	*	1530	A

Version B - With 1 Positioner

Series	Material	Width	Version
5265	*	0255	B
5265	*	0340	B
5265	*	0425	B
5265	*	0510	B
5265	*	0595	B
5265	*	0680	B
5265	*	0765	B
5265	*	0850	B
5265	*	0935	B
5265	*	1020	B
5265	*	1105	B
5265	*	1190	B
5265	*	1275	B
5265	*	1360	B
5265	*	1445	B
5265	*	1530	B

Version C - With 2 Positioners

Series	Material	Width	Version
5265	*	0255	C
5265	*	0340	C
5265	*	0425	C
5265	*	0510	C
5265	*	0595	C
5265	*	0680	C
5265	*	0765	C
5265	*	0850	C
5265	*	0935	C
5265	*	1020	C
5265	*	1105	C
5265	*	1190	C
5265	*	1275	C
5265	*	1360	C
5265	*	1445	C
5265	*	1530	C

Oadby Core product range
Oadby Available from stock in Leicester
Easy Available from stock in Italy
Standard Produced to order in Italy
Movex

530

Pitch 15,0 mm
H= 8,7 mm

530 FT
530 FTT
530 GT
530 GT *Side indent*
530 LBP
530 PRO LBP

Movex®

530 FT

Tappeto Modulare 530 FT, H=8,7 M=3"
Modular Belt Series 530 FT, H=8,7 M=3" / Modulare Mattenkette 530 FT, H=8,7 M=3"

CODE STRUCTURE GUIDE (Example)

Backflex radius min.: 25 mm

5321	01	0003	A
Series	*Material	Width	Version

pg. 317 | NoseBars 275/278/281 | pg. 651>661

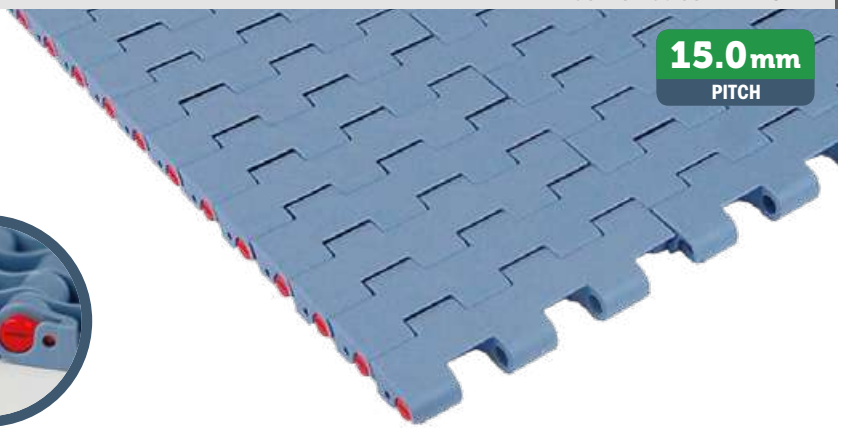

SAMPLE BOX
Art.-Nr. **5321018888A**

***Material**

LFA - Code 01
Low friction Acetal
Easy Delivery

Max w. load: 26000 N/m
Weight: 9,2 kg/m²
Temp. range dry: -40÷80 °C
Temp. range wet: -40÷65 °C
Pin material: PBT white

MX - Code 03
Performance PBT

Max w. load: 21000 N/m
Weight: 9,0 kg/m²
Temp. range dry: -40÷120 °C
Temp. range wet: -40÷60 °C
Pin material: POM grey

DKM - Code 16
Aramide Reinforced Acetal

Max w. load: 26000 N/m
Weight: 9,2 kg/m²
Temp. range dry: -40÷80 °C
Temp. range wet: -40÷65 °C
Pin material: PBT white

MWX - Code 17
Polyamide Composite

Max w. load: 26000 N/m
Weight: 9,5 kg/m²
Temp. range dry: -40÷104 °C
Temp. range wet: NR
Pin material: PBT white

MPX - Code 25
Lubricated Acetal

Max w. load: 26000 N/m
Weight: 9,2 kg/m²
Temp. range dry: -40÷80 °C
Temp. range wet: -40÷65 °C
Pin material: PBT white

Version A - Standard

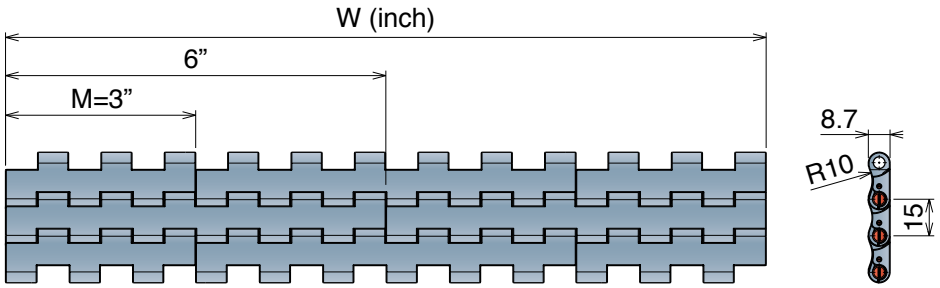

Version A - Standard

Series	Material	Width	Version
5321	*	0003	A
5321	*	0006	A
5321	*	0009	A
5321	*	0012	A
5321	*	0015	A
5321	*	0018	A
5321	*	0021	A
5321	*	0024	A
5321	*	0027	A
5321	*	0030	A
5321	*	0033	A
5321	*	0036	A
5321	*	0039	A
5321	*	0042	A
5321	*	0045	A
5321	*	0048	A
5321	*	0051	A
5321	*	0054	A

Oadby Core product range
Oadby Available from stock in Leicester
Easy Available from stock in Italy
Standard Produced to order in Italy
Movex

530 FTT

Tappeto Modulare 530 FTT, H=8,7 M=3”
Modular Belt Series 530 FTT, H=8,7 M=3” / Modulare Mattenkette 530 FTT, H=8,7 M=3”

CODE STRUCTURE GUIDE (Example)

Backflex radius min.: 25 mm

5326	01	0003	A
Series	*Material	Width	Version

pg. 317 | NoseBars 275/278/281 | pg. 651>661

***Material**

LFA - Code 01
Low friction Acetal

Max w. load:	26000 N/m
Weight:	9,2 kg/m²
Temp. range dry:	-40÷80 °C
Temp. range wet:	-40÷65 °C
Pin material:	PBT white

MX - Code 03
Performance PBT

Max w. load:	21000 N/m
Weight:	9,0 kg/m²
Temp. range dry:	-40÷120 °C
Temp. range wet:	-40÷60 °C
Pin material:	POM grey

Version A - Standard

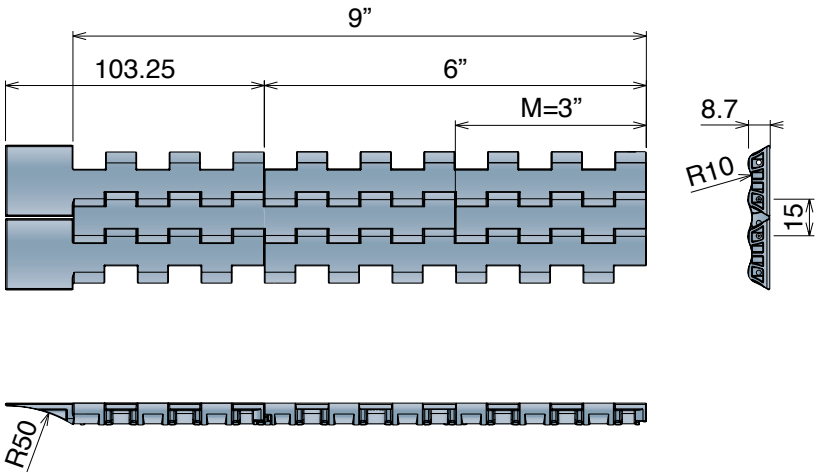

Version A - Standard

Series	Material	Width	Version
5326	*	0003	A
5326	*	0006	A
5326	*	0009	A

530 GT

Tappeto Modulare 530 GT, H=8,7 M=3”
Modular Belt Series 530 GT, H=8,7 M=3” / Modulare Mattenkette 530 GT, H=8,7 M=3”

CODE STRUCTURE GUIDE (Example)

Backflex radius min.: 30 mm

5323	01	0003	A
Series	*Material	Width	Version

pg. 317 | NoseBars 275/278/281 | pg. 651>661

SAMPLE BOX
Art.-Nr. 5323018888A

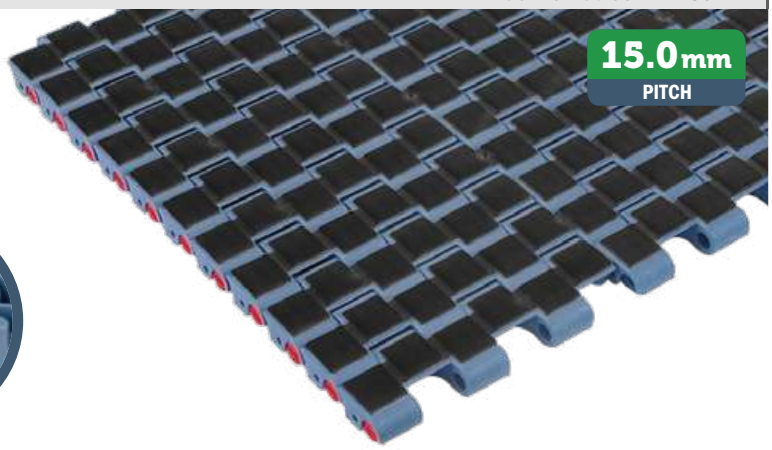

*Material

LFA - Code 01
Low friction Acetal

Easy Delivery

Max w. load: 26000 N/m
Weight: 10,6 kg/m²
Temp. range dry: -40÷80 °C
Temp. range wet: -40÷65 °C
Pin material: PBT white
Top rubber: 50 ShA-Dark grey

PP - Code 02
Polypropylene

Max w. load: 16000 N/m
Weight: 9,0 kg/m²
Temp. range dry: 4÷80 °C
Temp. range wet: 4÷80 °C
Pin material: PP blue
Top rubber: 50 ShA-Pigeon blue

MX - Code 03
Performance PBT

Max w. load: 21000 N/m
Weight: 10,6 kg/m²
Temp. range dry: -40÷120 °C
Temp. range wet: -40÷60 °C
Pin material: POM grey
Top rubber: 50 ShA-Dark grey

Version A - Standard

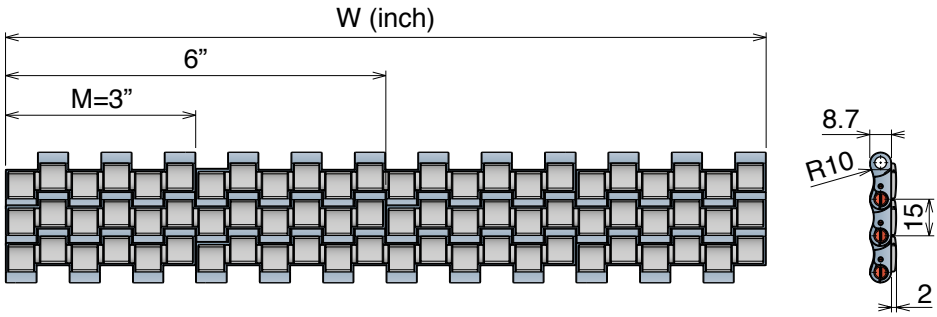

Version A - Standard

Series	Material	Width	Version
5323	*	0003	A
5323	*	0006	A
5323	*	0009	A
5323	*	0012	A
5323	*	0015	A
5323	*	0018	A
5323	*	0021	A
5323	*	0024	A
5323	*	0027	A
5323	*	0030	A
5323	*	0033	A
5323	*	0036	A
5323	*	0039	A
5323	*	0042	A
5323	*	0045	A
5323	*	0048	A
5323	*	0051	A
5323	*	0054	A

Oadby Core product range
Oadby Available from stock in Leicester
Easy Available from stock in Italy
Standard Produced to order in Italy
Movex®

530 GT *Side indent*

Tappeto Modulare 530 GT, H=8,7 M=3"

Modular Belt Series 530 GT, H=8,7 M=3" / Modulare Mattenkette 530 GT, H=8,7 M=3"

CODE STRUCTURE GUIDE (Example)

Backflex radius min.: 30 mm

5325	01	0009	A
Series	*Material	Width	Version

pg. 317 | NoseBars 275/278/281 | pg. 651>661

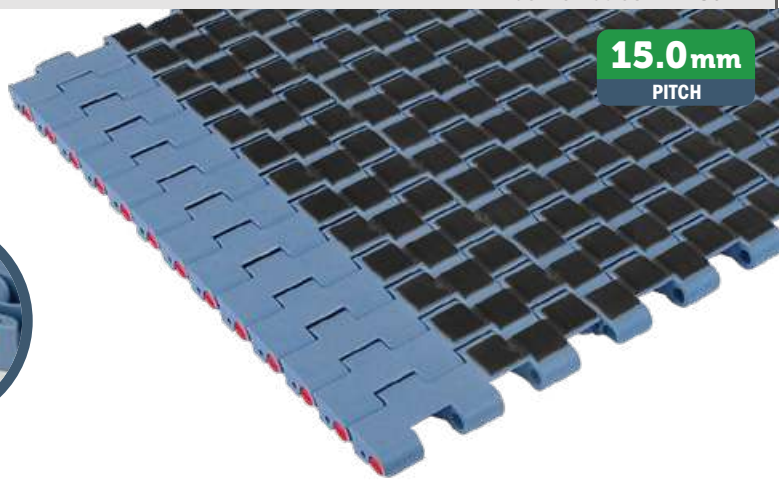

*Material

LFA - Code 01
Low friction Acetal

Easy Delivery

Max w. load: 26000 N/m
Weight: 10,6 kg/m²
Temp. range dry: -40÷80 °C
Temp. range wet: -40÷65 °C
Pin material: PBT white
Top rubber: 50 ShA-Dark grey

PP - Code 02
Polypropylene

Max w. load: 16000 N/m
Weight: 9,0 kg/m²
Temp. range dry: 4÷80 °C
Temp. range wet: 4÷80 °C
Pin material: PP blue
Top rubber: 50 ShA-Pigeon blue

MX - Code 03
Performance PBT

Max w. load: 21000 N/m
Weight: 10,6 kg/m²
Temp. range dry: -40÷120 °C
Temp. range wet: -40÷60 °C
Pin material: POM grey
Top rubber: 50 ShA-Dark grey

Version A - Standard

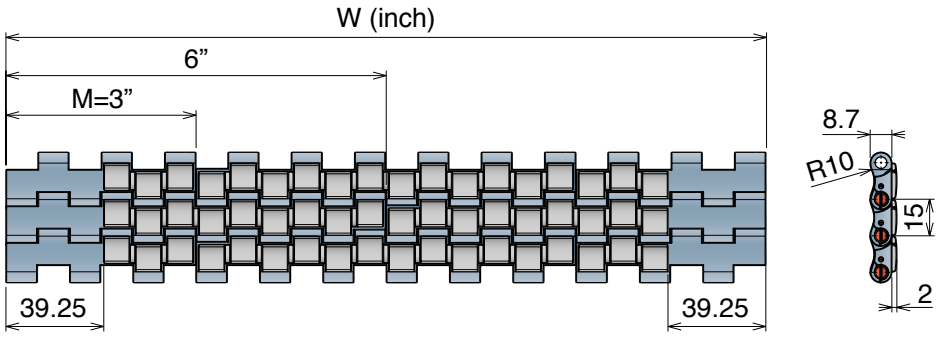

Version A - Standard

Series	Material	Width	Version
5325	*	0009	A
5325	*	0012	A
5325	*	0015	A
5325	*	0018	A
5325	*	0021	A
5325	*	0024	A
5325	*	0027	A
5325	*	0030	A
5325	*	0033	A
5325	*	0036	A
5325	*	0039	A
5325	*	0042	A
5325	*	0045	A
5325	*	0048	A
5325	*	0051	A
5325	*	0054	A

Imperial Size

530 LBP

Tappeto Modulare 530 LBP, H=8,7 M=3"
Modular Belt Series 530 LBP, H=8,7 M=3" / Modulare Mattenkette 530 LBP, H=8,7 M=3"

CODE STRUCTURE GUIDE (Example)

Backflex radius min.: 25 mm

5324	01	0006	A
Series	*Material	Width	Version

pg. 317 | NoseBars pg. 275/279 | pg. 651>661

SAMPLE BOX
Art.-Nr. 5324018888A

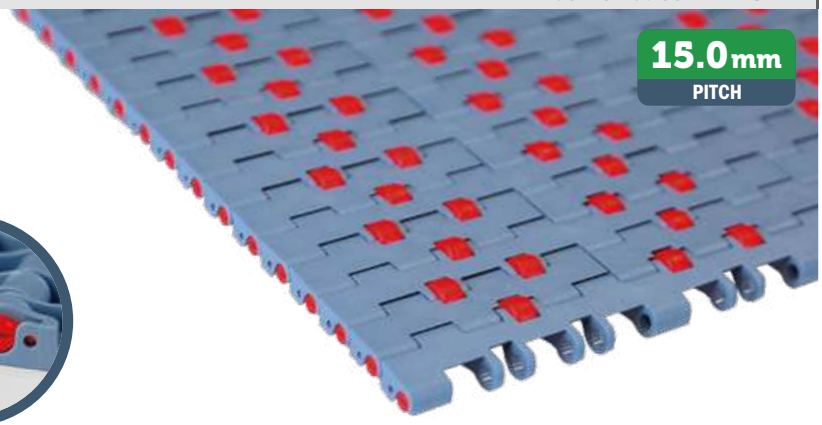

Material

LFA - Code 01
Low friction Acetal

Max w. load:	24000 N/m
Weight:	9,0 kg/m²
Temp. range dry:	-40÷80 °C
Temp. range dry:	-40÷65 °C
Pin material:	PBT white

POM Roller

Density: 700 rollers/m²

Version A - Standard

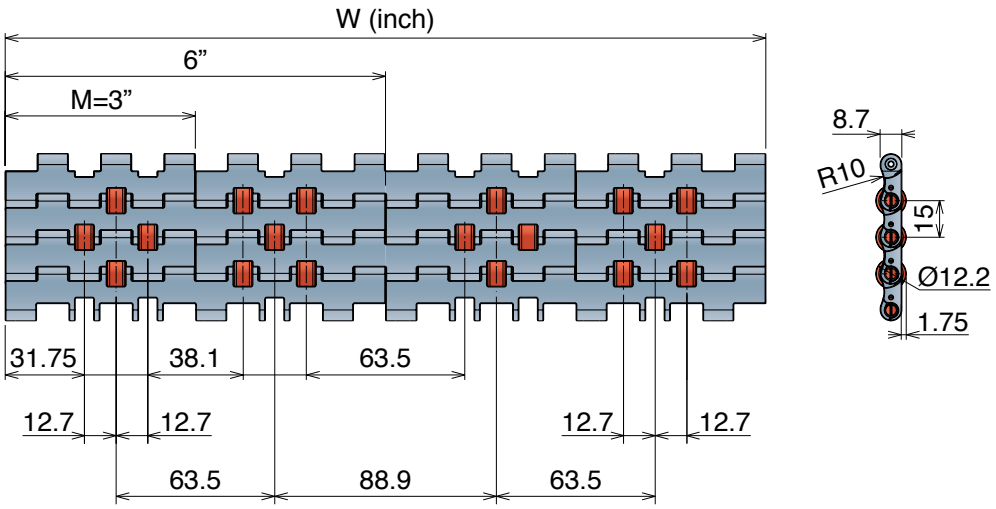

Version A - Standard

Series	Material	Width	Version
5324	01	0006	A
5324	01	0012	A
5324	01	0018	A
5324	01	0024	A
5324	01	0030	A
5324	01	0036	A
5324	01	0042	A
5324	01	0048	A
5324	01	0054	A

Guide position for accumulation system *- Example*

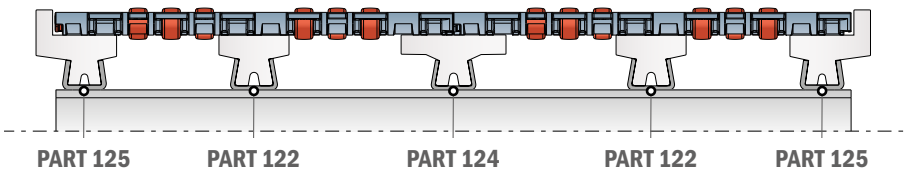

For accumulation system, please place the wear strips between the rollers (max 50 mm).

Guide position for driven rollers, for alignment/distribution system *- Example*

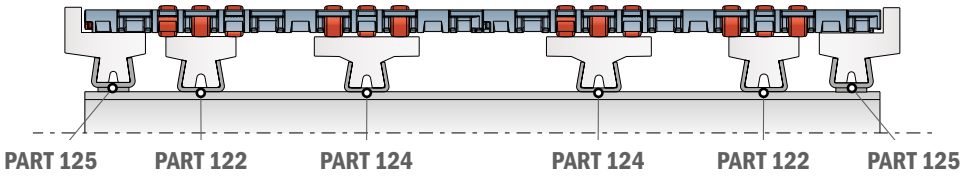

For driven rollers, please place the wear strips directly in contact under the rollers.

530 LBP can also be used with standard profiles: consult extruded profiles section for more details.

Oadby Core product range
Oadby Available from stock in Leicester | Easy Available from stock in Italy | Standard Produced to order in Italy
Movex

NEW 530 PRO LBP

Tappeto Modulare 530 PRO LBP, H=8,7 M=3"
Modular Belt Series* 530 PRO *LBP, H=8,7 M=3" / Modulare Mattenkette* 530 PRO *LBP, H=8,7 M=3"

CODE STRUCTURE GUIDE (Example)

Backflex radius min.: 25 mm

5237	01	0006	A
Series	*Material	Width	Version

pg. 317 | NoseBars pg. 276/279 | pg. 651>661

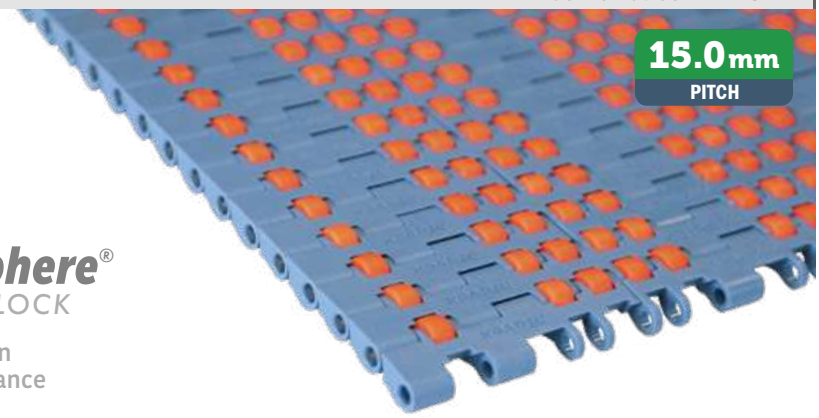

SAMPLE BOX
Art.-Nr. 5237018888A

Pin Sphere® AUTOLOCK

- Easier installation
- Quicker maintenance
- High strength

Material

LFA - Code 01
Low friction Acetal

Max w. load:	21000 N/m
Weight:	10,0 kg/m²
Temp. range dry:	-40÷80 °C
Temp. range wet:	-40÷65 °C
Pin material:	PBT white

PFX Roller

Density: 3.400 rollers/m²

THE BEST CHOICE TO REACH THE LOWEST FRICTION

Version A - Standard

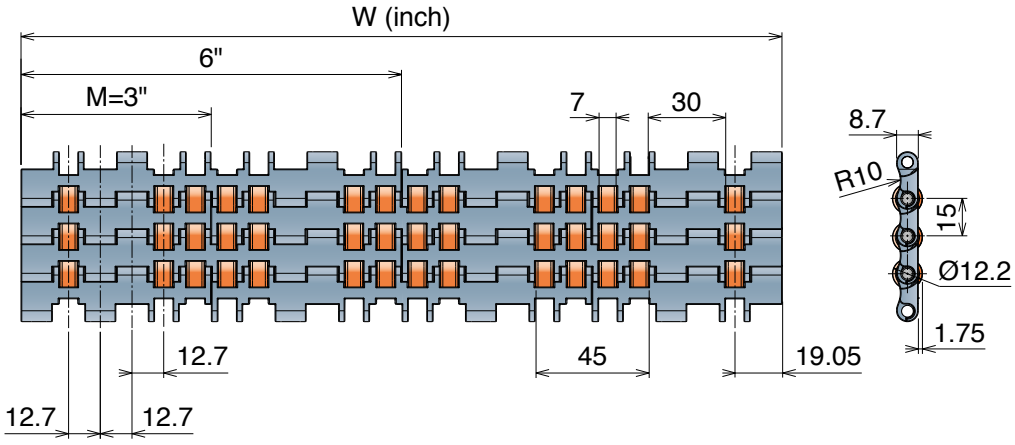

Guide position for accumulation system - *Example*

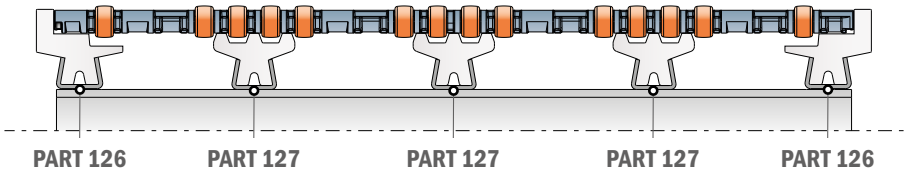

For accumulation system, please place the wear strips between the rollers (max 25 mm).

Guide position for driven rollers, for alignment/distribution system - *Example*

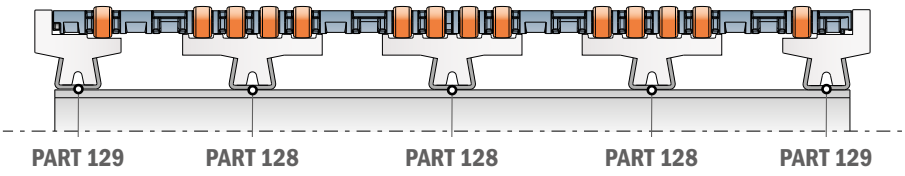

For driven rollers, please place the wear strips directly in contact under the rollers.

530 PRO LBP can also be used with standard profiles: consult extruded profiles section for more details.

Version A - Standard

Series	Material	Width	Version
5237	01	0006	A
5237	01	0009	A
5237	01	0012	A
5237	01	0015	A
5237	01	0018	A
5237	01	0021	A
5237	01	0024	A
5237	01	0027	A
5237	01	0030	A
5237	01	0033	A
5237	01	0036	A
5237	01	0039	A
5237	01	0042	A
5237	01	0045	A
5237	01	0048	A
5237	01	0051	A
5237	01	0054	A

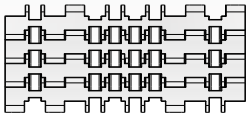

Rollers configuration for 530 PRO LBP, 6 inch wide belt.

550

Pitch 25,4 mm
H= 8,7 mm

Metric Size

550 FT
550 FT *One track Belt*
550 FTT
550 FG
550 FG *One track Belt*
550 GT
550 GT *Side indent*
550 FLIGHT TOP
550 PRO FT
550 PRO M

550 FT

Tappeto Modulare 550 FT, H=8,7 M=85
Modular Belt Series 550 FT, H=8,7 M=85 / Modulare Mattenkette 550 FT, H=8,7 M=85

CODE STRUCTURE GUIDE (Example)

Backflex radius min.: 25 mm

5501	01	0085	A
Series	*Material	Width	Version

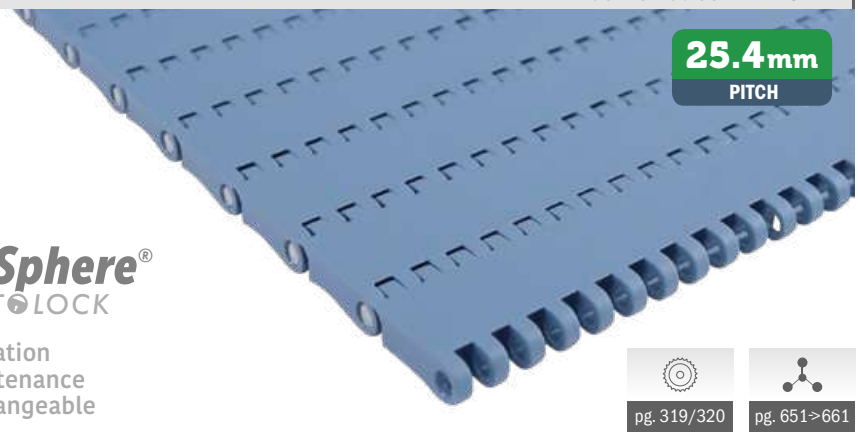

Pin Sphere® AUTOLOCK

- Easier installation
- Quicker maintenance
- 100% interchangeable

pg. 319/320 pg. 651>661

SAMPLE BOX
Art.-Nr. 5501018888A

Version A - Standard

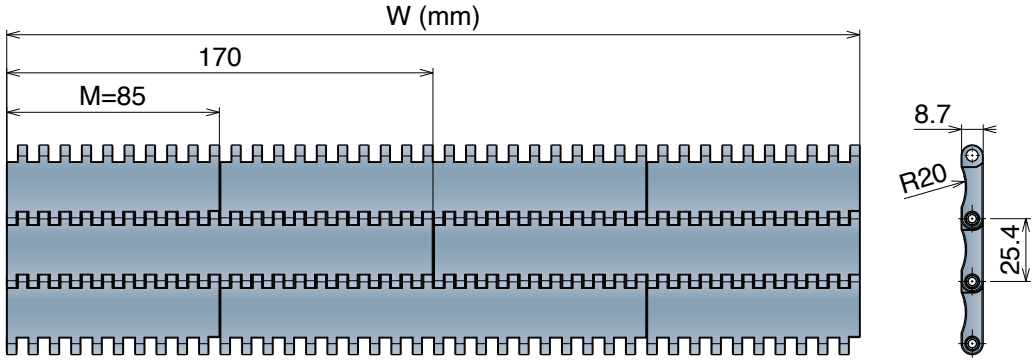

Version B - With 1 Positioner

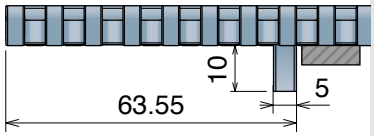

Version C - With 2 Positioner

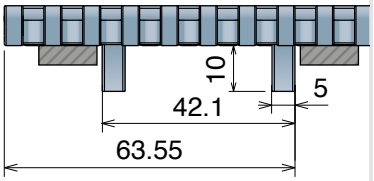

*Material

LFA - Code 01
Low friction Acetal

Easy Delivery

Max w. load:	30000 N/m
Weight:	8,5 kg/m²
Temp. range dry:	-40÷80 °C
Temp. range wet:	-40÷65 °C
Pin material:	PBT white

PP - Code 02
Polypropylene

Max w. load:	18000 N/m
Weight:	8,4 kg/m²
Temp. range dry:	4÷104 °C
Temp. range wet:	4÷104 °C
Pin material:	PP blue

MX - Code 03
Performance PBT

Max w. load:	24000 N/m
Weight:	8,2 kg/m²
Temp. range dry:	-40÷120 °C
Temp. range wet:	-40÷60 °C
Pin material:	POM grey

LFW - Code 05
Low friction Acetal

Max w. load:	30000 N/m
Weight:	8,5 kg/m²
Temp. range dry:	-40÷80 °C
Temp. range wet:	-40÷65 °C
Pin material:	PBT white

DKM - Code 16
Aramide Reinforced Acetal

Max w. load:	30000 N/m
Weight:	8,5 kg/m²
Temp. range dry:	-40÷80 °C
Temp. range wet:	-40÷65 °C
Pin material:	PBT white

MWX - Code 17
Polyamide Composite

Max w. load:	30000 N/m
Weight:	8,9 kg/m²
Temp. range dry:	-40÷104 °C
Temp. range wet:	NR
Pin material:	PBT white

LFB - Code 23
Low friction Acetal

Max w. load:	30000 N/m
Weight:	8,5 kg/m²
Temp. range dry:	-40÷80 °C
Temp. range wet:	-40÷65 °C
Pin material:	PBT white

PFX - Code 30
Extra performance PBT

Max w. load:	24000 N/m
Weight:	8,2 kg/m²
Temp. range dry:	-40÷120 °C
Temp. range wet:	-40÷60 °C
Pin material:	POM grey

Version A - Standard

Series	Material	Width	Version
5501	*	0085	A
5501	*	0170	A
5501	*	0255	A
5501	*	0340	A
5501	*	0425	A
5501	*	0510	A
5501	*	0595	A
5501	*	0680	A
5501	*	0765	A
5501	*	0850	A
5501	*	0935	A
5501	*	1020	A
5501	*	1105	A
5501	*	1190	A
5501	*	1275	A
5501	*	1360	A
5501	*	1445	A
5501	*	1530	A

Version B - With 1 Positioner

Series	Material	Width	Version
5501	*	0085	B
5501	*	0170	B
5501	*	0255	B
5501	*	0340	B
5501	*	0425	B
5501	*	0510	B
5501	*	0595	B
5501	*	0680	B
5501	*	0765	B
5501	*	0850	B
5501	*	0935	B
5501	*	1020	B
5501	*	1105	B
5501	*	1190	B
5501	*	1275	B
5501	*	1360	B
5501	*	1445	B
5501	*	1530	B

Version C - With 2 Positioners

Series	Material	Width	Version
5501	*	0085	C
5501	*	0170	C
5501	*	0255	C
5501	*	0340	C
5501	*	0425	C
5501	*	0510	C
5501	*	0595	C
5501	*	0680	C
5501	*	0765	C
5501	*	0850	C
5501	*	0935	C
5501	*	1020	C
5501	*	1105	C
5501	*	1190	C
5501	*	1275	C
5501	*	1360	C
5501	*	1445	C
5501	*	1530	C

550 FT *One track Belt* Tappeto Modulare 550 FT, H=8,7 K330

Modular Belt Series 550 FT, H=8,7 K330 / Modulare Mattenkette 550 FT, H=8,7 K330

CODE STRUCTURE GUIDE (Example) — **Backflex radius min.:** 25 mm

5221	01	9330	A
Series	*Material	Width	Version

pg. 319/320 pg. 651>661

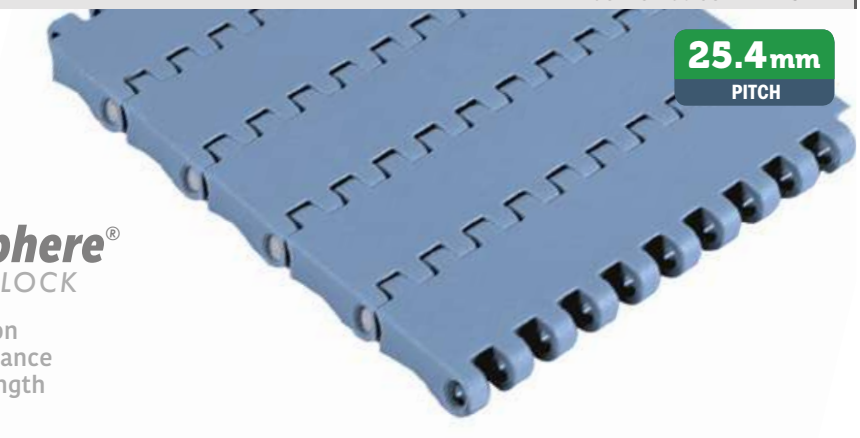

Pin Sphere® AUTOLOCK

- Easier installation
- Quicker maintenance
- 10% Higher strength

*Material

LFA - Code 01
Low friction Acetal

Easy Delivery

Max w. load:	2500 N
Weight:	8,5 kg/m²
Temp. range dry:	-40÷80 °C
Temp. range wet:	-40÷65 °C
Pin material:	PBT white

PP - Code 02
Polypropylene

Max w. load:	1500 N
Weight:	8,4 kg/m²
Temp. range dry:	4÷104 °C
Temp. range wet:	4÷104 °C
Pin material:	PP blue

MX - Code 03
Performance PBT

Max w. load:	2000 N
Weight:	8,2 kg/m²
Temp. range dry:	-40÷120 °C
Temp. range wet:	-40÷60 °C
Pin material:	POM grey

DKM - Code 16
Aramide Reinforced Acetal

Max w. load:	2500 N
Weight:	8,5 kg/m²
Temp. range dry:	-40÷80 °C
Temp. range wet:	-40÷65 °C
Pin material:	PBT white

MWX - Code 17
Polyamide Composite

Max w. load:	2500 N
Weight:	8,9 kg/m²
Temp. range dry:	-40÷104 °C
Temp. range wet:	NR
Pin material:	PBT white

LFB - Code 23
Low friction Acetal

Max w. load:	2500 N
Weight:	8,5 kg/m²
Temp. range dry:	-40÷80 °C
Temp. range wet:	-40÷65 °C
Pin material:	PBT white

PFX - Code 30
Extra performance PBT

Max w. load:	2000 N
Weight:	8,2 kg/m²
Temp. range dry:	-40÷120 °C
Temp. range wet:	-40÷60 °C
Pin material:	POM grey

THE BEST CHOICE FOR DRY RUNNING APPLICATIONS

Version A - Standard

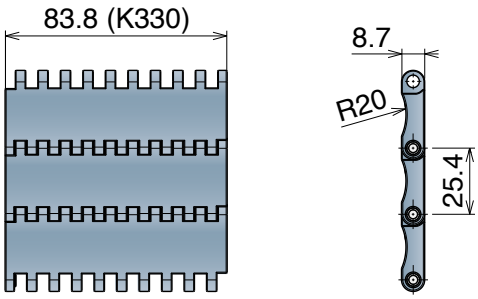

Series	Material	Width	Version
5221	*	9330	A

Version C - With 2 Positioner

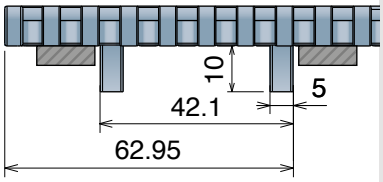

Series	Material	Width	Version
5221	*	9330	C

Disassembling /Assembling mode

NEW

550 FT One track belt
MOVEX TOOL

The specific tool for belts developed to facilitate belt assembly and disassembly.

Article Nr. 29970

Movex tools are made with 3D printer, the color may vary due to availability of the material.

Oadby Core product range
Oadby Available from stock in Leicester
Easy Available from stock in Italy
Standard Produced to order in Italy

Movex®

550 FTT

Tappeto Modulare 550 FTT, H=8,7 M=85
Modular Belt Series 550 FTT, H=8,7 M=85 / Modulare Mattenkette 550 FTT, H=8,7 M=85

CODE STRUCTURE GUIDE (Example)

Backflex radius min.: 25 mm

5506	01	0085	C
Series	*Material	Width	Version

pg. 319/320 pg. 651>661

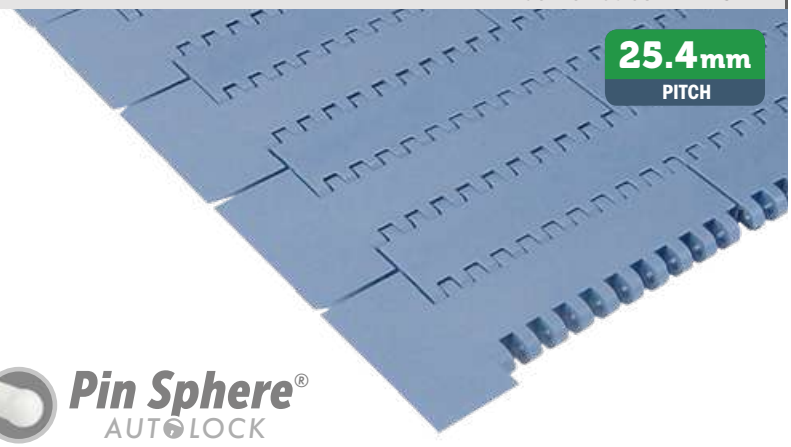

Pin Sphere® AUTOLOCK

- Easier installation
- Quicker maintenance
- 100% interchangeable

***Material**

LFA - Code 01 *Low friction Acetal*		MX - Code 03 *Performance PBT*	
Max w. load:	30000 N/m	**Max w. load:**	24000 N/m
Weight:	8,5 kg/m²	**Weight:**	8,2 kg/m²
Temp. range dry:	-40÷80 °C	**Temp. range dry:**	-40÷120 °C
Temp. range wet:	-40÷65 °C	**Temp. range wet:**	-40÷60 °C
Pin material:	PBT white	**Pin material:**	POM grey

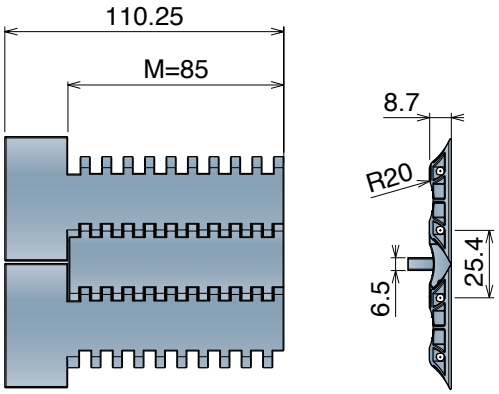

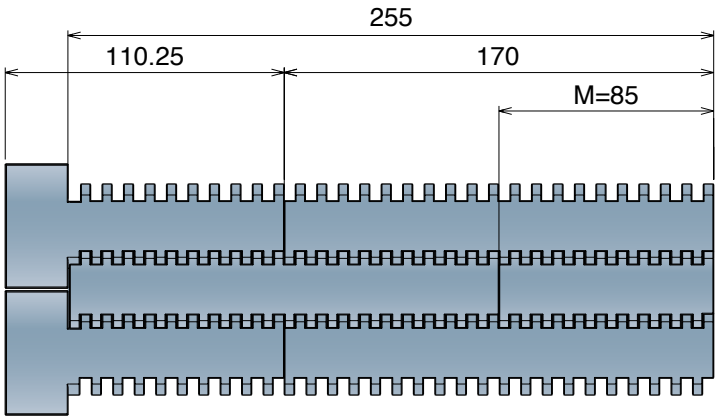

Version C

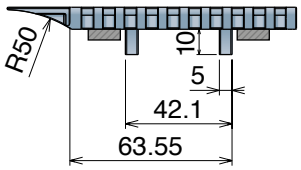

Version CN - Near

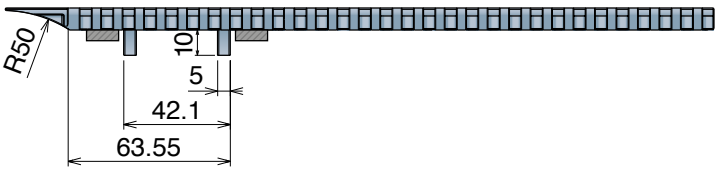

Version C

Series	Material	Width	Version
5506	*	0085	C

Version CO - Opposite

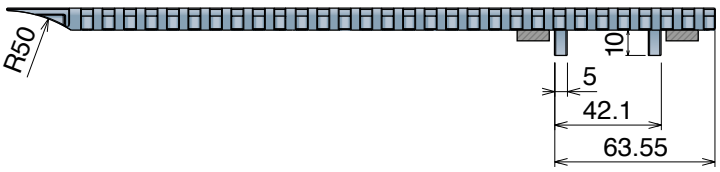

Max working load (N)	
Width	85
LFA	2300
MX	1850

Version CN - Near

Series	Material	Width	Version
5506	*	0170	CN
5506	*	0255	CN

Version CO - Opposite

Series	Material	Width	Version
5506	*	0170	CO
5506	*	0255	CO

550 FG Open Surface 25% Tappeto Modulare 550 FG, H=8,7 M=85

Modular Belt Series 550 FG, H=8,7 M=85 / Modulare Mattenkette 550 FG, H=8,7 M=85

CODE STRUCTURE GUIDE (Example)

Backflex radius min.: 25 mm

5222	01	0085	A
Series	*Material	Width	Version

pg. 319/320 pg. 651>661

SAMPLE BOX
Art.-Nr. 5222018888A

*Material

LFA - Code 01
Low friction Acetal

Easy Delivery

Max w. load:	27500 N/m
Weight:	7,0 kg/m²
Temp. range dry:	-40÷80 °C
Temp. range wet:	-40÷65 °C
Pin material:	PBT white

MX - Code 03
Performance PBT

Max w. load:	22000 N/m
Weight:	6,7 kg/m²
Temp. range dry:	-40÷120 °C
Temp. range wet:	-40÷60 °C
Pin material:	POM grey

LFB - Code 23
Low friction Acetal

Max w. load:	27500 N/m
Weight:	7,0 kg/m²
Temp. range dry:	-40÷80 °C
Temp. range wet:	-40÷65 °C
Pin material:	PBT white

PFX - Code 30
Extra performance PBT

Max w. load:	22000 N/m
Weight:	6,7 kg/m²
Temp. range dry:	-40÷120 °C
Temp. range wet:	-40÷60 °C
Pin material:	POM grey

THE BEST CHOICE FOR DRY RUNNING APPLICATIONS

Version A - Standard

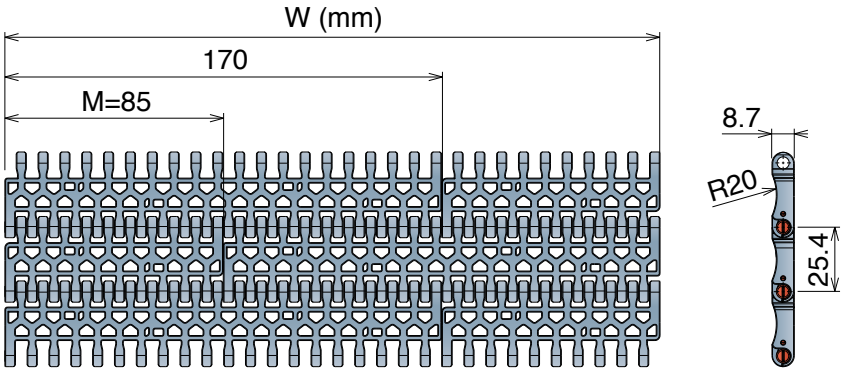

Version B - With 1 Positioner

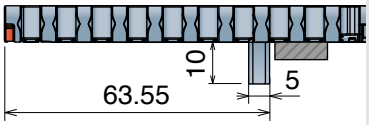

Version C - With 2 Positioner

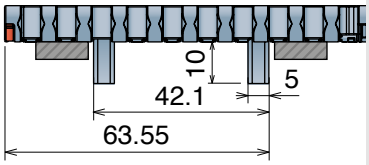

Version A - Standard

Series	Material	Width	Version
5222	*	0085	A
5222	*	0170	A
5222	*	0255	A
5222	*	0340	A
5222	*	0425	A
5222	*	0510	A
5222	*	0595	A
5222	*	0680	A
5222	*	0765	A
5222	*	0850	A
5222	*	0935	A
5222	*	1020	A
5222	*	1105	A
5222	*	1190	A
5222	*	1275	A
5222	*	1360	A
5222	*	1445	A
5222	*	1530	A

Version B - With 1 Positioner

Series	Material	Width	Version
5222	*	0085	B
5222	*	0170	B
5222	*	0255	B
5222	*	0340	B
5222	*	0425	B
5222	*	0510	B
5222	*	0595	B
5222	*	0680	B
5222	*	0765	B
5222	*	0850	B
5222	*	0935	B
5222	*	1020	B
5222	*	1105	B
5222	*	1190	B
5222	*	1275	B
5222	*	1360	B
5222	*	1445	B
5222	*	1530	B

Version C - With 2 Positioners

Series	Material	Width	Version
5222	*	0085	C
5222	*	0170	C
5222	*	0255	C
5222	*	0340	C
5222	*	0425	C
5222	*	0510	C
5222	*	0595	C
5222	*	0680	C
5222	*	0765	C
5222	*	0850	C
5222	*	0935	C
5222	*	1020	C
5222	*	1105	C
5222	*	1190	C
5222	*	1275	C
5222	*	1360	C
5222	*	1445	C
5222	*	1530	C

Oadby Core product range
Oadby Available from stock in Leicester
Easy Available from stock in Italy
Standard Produced to order in Italy

550 FG *One track Belt* Open Surface 25% Tappeto Modulare 550 FG, H=8,7 K330

Modular Belt Series 550 FG, H=8,7 K330 / Modulare Mattenkette 550 FG, H=8,7 K330

CODE STRUCTURE GUIDE (Example)

Backflex radius min.: 25 mm

5222	01	9330	A
Series	*Material	Width	Version

pg. 319/320 pg. 651>661

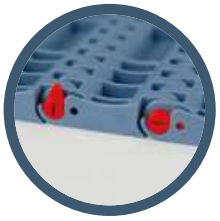

***Material**

LFA - Code 01
Low friction Acetal

Easy Delivery

Max w. load:	2300 N
Weight:	7,0 kg/m²
Temp. range dry:	-40÷80 °C
Temp. range wet:	-40÷65 °C
Pin material:	PBT white

MX - Code 03
Performance PBT

Max w. load:	1850 N
Weight:	6,7 kg/m²
Temp. range dry:	-40÷120 °C
Temp. range wet:	-40÷60 °C
Pin material:	POM grey

LFB - Code 23
Low friction Acetal

Max w. load:	2300 N
Weight:	7,0 kg/m²
Temp. range dry:	-40÷80 °C
Temp. range wet:	-40÷65 °C
Pin material:	PBT white

PFX - Code 30
Extra performance PBT

Max w. load:	1850 N
Weight:	6,7 kg/m²
Temp. range dry:	-40÷120 °C
Temp. range wet:	-40÷60 °C
Pin material:	POM grey

THE BEST CHOICE FOR DRY RUNNING APPLICATIONS

Version A - Standard

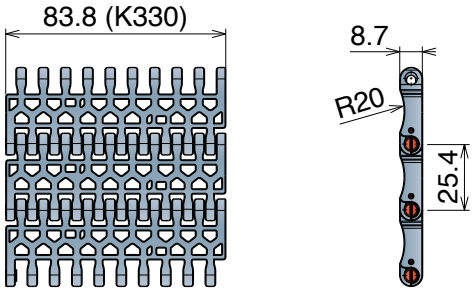

Version C - With 2 Positioner

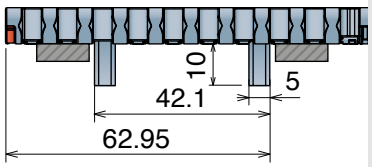

Version A - Standard

Series	Material	Width	Version
5222	*	9330	A

Version C - With 2 Positioners

Series	Material	Width	Version
5222	*	9330	C

550 GT

Tappeto Modulare 550 GT, H=8,7 M=85
Modular Belt Series 550 GT, H=8,7 M=85 / Modulare Mattenkette 550 GT, H=8,7 M=85

CODE STRUCTURE GUIDE (Example)

Backflex radius min.: 30 mm

5503	01	0085	A
Series	*Material	Width	Version

pg. 319/320
pg. 651>661

SAMPLE BOX
Art.-Nr. 5503018888A

Pin Sphere®
AUTOLOCK

- Easier installation
- Quicker maintenance
- 100% interchangeable

*Material

LFA - Code 01
Low friction Acetal

Max w. load:	27500 N/m
Weight:	10,1 kg/m²
Temp. range dry:	-40÷80 °C
Temp. range wet:	-40÷65 °C
Pin material:	PBT white
Top rubber:	50 ShA-Dark grey

PP - Code 02
Polypropylene

Max w. load:	16500 N/m
Weight:	8,4 kg/m²
Temp. range dry:	4÷80 °C
Temp. range wet:	4÷80 °C
Pin material:	PP blue
Top rubber:	50 ShA-Pigeon blue

MX - Code 03
Performance PBT

Max w. load:	21500 N/m
Weight:	10,5 kg/m²
Temp. range dry:	-40÷120 °C
Temp. range wet:	-40÷60 °C
Pin material:	POM grey
Top rubber:	50 ShA-Dark grey

Version A - Standard

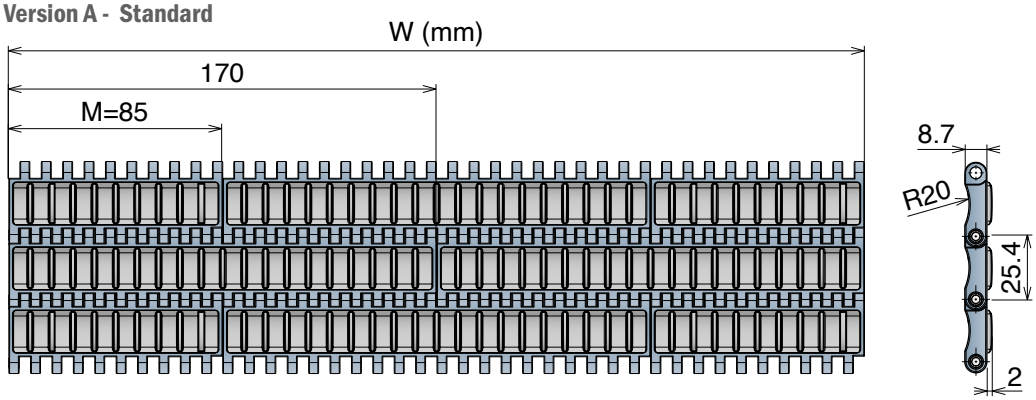

Version B - With 1 Positioner

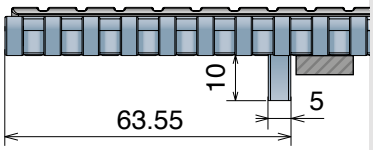

Version C - With 2 Positioner

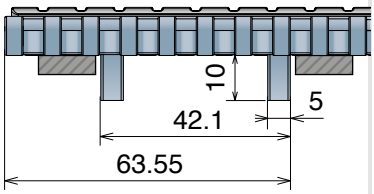

Version A - Standard

Series	Material	Width	Version
5503	*	0085	A
5503	*	0170	A
5503	*	0255	A
5503	*	0340	A
5503	*	0425	A
5503	*	0510	A
5503	*	0595	A
5503	*	0680	A
5503	*	0765	A
5503	*	0850	A
5503	*	0935	A
5503	*	1020	A
5503	*	1105	A
5503	*	1190	A
5503	*	1275	A
5503	*	1360	A
5503	*	1445	A
5503	*	1530	A

Version B - With 1 Positioner

Series	Material	Width	Version
5503	*	0085	B
5503	*	0170	B
5503	*	0255	B
5503	*	0340	B
5503	*	0425	B
5503	*	0510	B
5503	*	0595	B
5503	*	0680	B
5503	*	0765	B
5503	*	0850	B
5503	*	0935	B
5503	*	1020	B
5503	*	1105	B
5503	*	1190	B
5503	*	1275	B
5503	*	1360	B
5503	*	1445	B
5503	*	1530	B

Version C - With 2 Positioners

Series	Material	Width	Version
5503	*	0085	C
5503	*	0170	C
5503	*	0255	C
5503	*	0340	C
5503	*	0425	C
5503	*	0510	C
5503	*	0595	C
5503	*	0680	C
5503	*	0765	C
5503	*	0850	C
5503	*	0935	C
5503	*	1020	C
5503	*	1105	C
5503	*	1190	C
5503	*	1275	C
5503	*	1360	C
5503	*	1445	C
5503	*	1530	C

Oadby Core product range
Oadby Available from stock in Leicester
Easy Available from stock in Italy
Standard Produced to order in Italy

550 GT Side indent

Tappeto Modulare 550 GT, H=8,7 M=85

Modular Belt Series 550 GT, H=8,7 M=85 / Modulare Mattenkette 550 GT, H=8,7 M=85

CODE STRUCTURE GUIDE (Example)

Backflex radius min.: 30 mm

5505	01	0255	A
Series	*Material	Width	Version

pg. 319/320 pg. 651>661

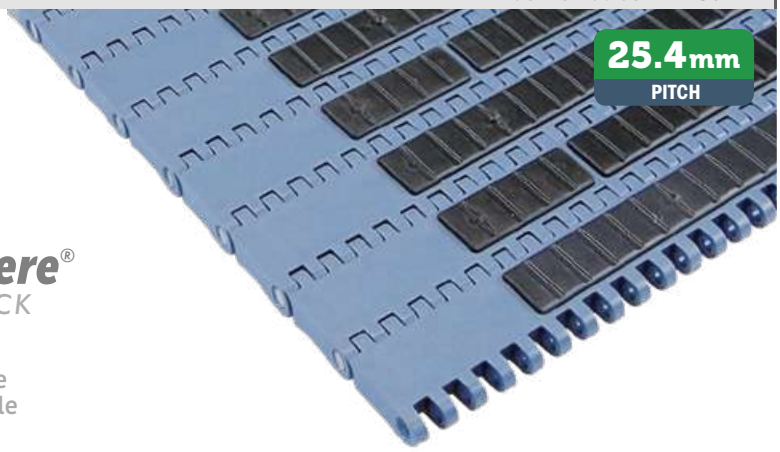

Pin Sphere® AUTOLOCK

- Easier installation
- Quicker maintenance
- 100% interchangeable

Version A - Standard

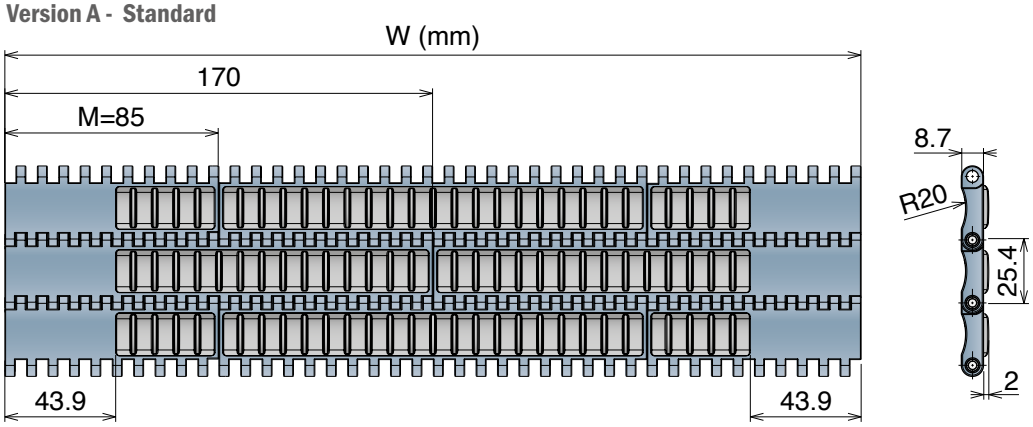

Version B - With 1 Positioner

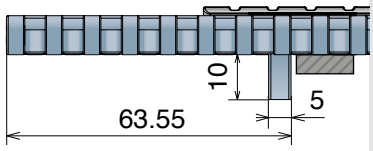

Version C - With 2 Positioner

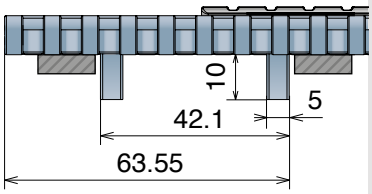

***Material**

LFA - Code 01
Low friction Acetal

Max w. load:	27500 N/m
Weight:	10,1 kg/m²
Temp. range dry:	-40÷80 °C
Temp. range wet:	-40÷65 °C
Pin material:	PBT white
Top rubber:	50 ShA-Dark grey

PP - Code 02
Polypropylene

Max w. load:	16500 N/m
Weight:	8,4 kg/m²
Temp. range dry:	4÷80 °C
Temp. range wet:	4÷80 °C
Pin material:	PP blue
Top rubber:	50 ShA-Pigeon blue

MX - Code 03
Performance PBT

Max w. load:	21500 N/m
Weight:	10,5 kg/m²
Temp. range dry:	-40÷120 °C
Temp. range wet:	-40÷60 °C
Pin material:	POM grey
Top rubber:	50 ShA-Dark grey

Version A - Standard

Series	Material	Width	Version
5505	*	0255	A
5505	*	0340	A
5505	*	0425	A
5505	*	0510	A
5505	*	0595	A
5505	*	0680	A
5505	*	0765	A
5505	*	0850	A
5505	*	0935	A
5505	*	1020	A
5505	*	1105	A
5505	*	1190	A
5505	*	1275	A
5505	*	1360	A
5505	*	1445	A
5505	*	1530	A

Version B - With 1 Positioner

Series	Material	Width	Version
5505	*	0255	B
5505	*	0340	B
5505	*	0425	B
5505	*	0510	B
5505	*	0595	B
5505	*	0680	B
5505	*	0765	B
5505	*	0850	B
5505	*	0935	B
5505	*	1020	B
5505	*	1105	B
5505	*	1190	B
5505	*	1275	B
5505	*	1360	B
5505	*	1445	B
5505	*	1530	B

Version C - With 2 Positioners

Series	Material	Width	Version
5505	*	0255	C
5505	*	0340	C
5505	*	0425	C
5505	*	0510	C
5505	*	0595	C
5505	*	0680	C
5505	*	0765	C
5505	*	0850	C
5505	*	0935	C
5505	*	1020	C
5505	*	1105	C
5505	*	1190	C
5505	*	1275	C
5505	*	1360	C
5505	*	1445	C
5505	*	1530	C

NEW

550 FLIGHT TOP

Tappeto Modulare 550 with Flight, H=8,7 M=85

Modular Belt Series 550 with Flight, H=8,7 M=85 / Modulare Mattenkette 550 with Flight, H=8,7 M=85

CODE STRUCTURE GUIDE

See following table

Backflex radius min.: 30 mm

pg. 319/320
pg. 651>661

SAMPLE BOX
Art.-Nr. 5503018888A

Pin Sphere® AUTOLOCK

- Easier installation
- Quicker maintenance
- 100% interchangeable

Material

LFA - Code 01
Low friction Acetal

Max w. load:	30000 N/m
Weight:	8,5 kg/m²
Temp. range dry:	-40÷80 °C
Temp. range wet:	-40÷65 °C
Pin material:	PBT white

PP - Code 02
Polypropylene

Max w. load:	18000 N/m
Weight:	8,4 kg/m²
Temp. range dry:	4÷104 °C
Temp. range wet:	4÷104 °C
Pin material:	PP blue

LFW - Code 05
Low friction Acetal

Max w. load:	30000 N/m
Weight:	8,5 kg/m²
Temp. range dry:	-40÷80 °C
Temp. range wet:	-40÷65 °C
Pin material:	PBT white

PPW - Code 21
Polypropylene

Max w. load:	18000 N/m
Weight:	8,4 kg/m²
Temp. range dry:	4÷80 °C
Temp. range wet:	4÷65 °C
Pin material:	PP blu

LFB - Code 23
Low friction Acetal

Max w. load:	30000 N/m
Weight:	8,5 kg/m²
Temp. range dry:	-40÷80 °C
Temp. range wet:	-40÷65 °C
Pin material:	PBT white

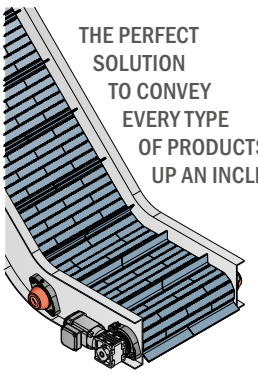

Version A - Standard

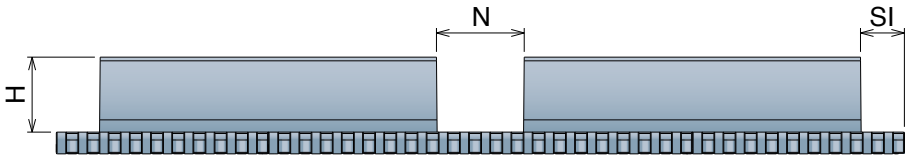

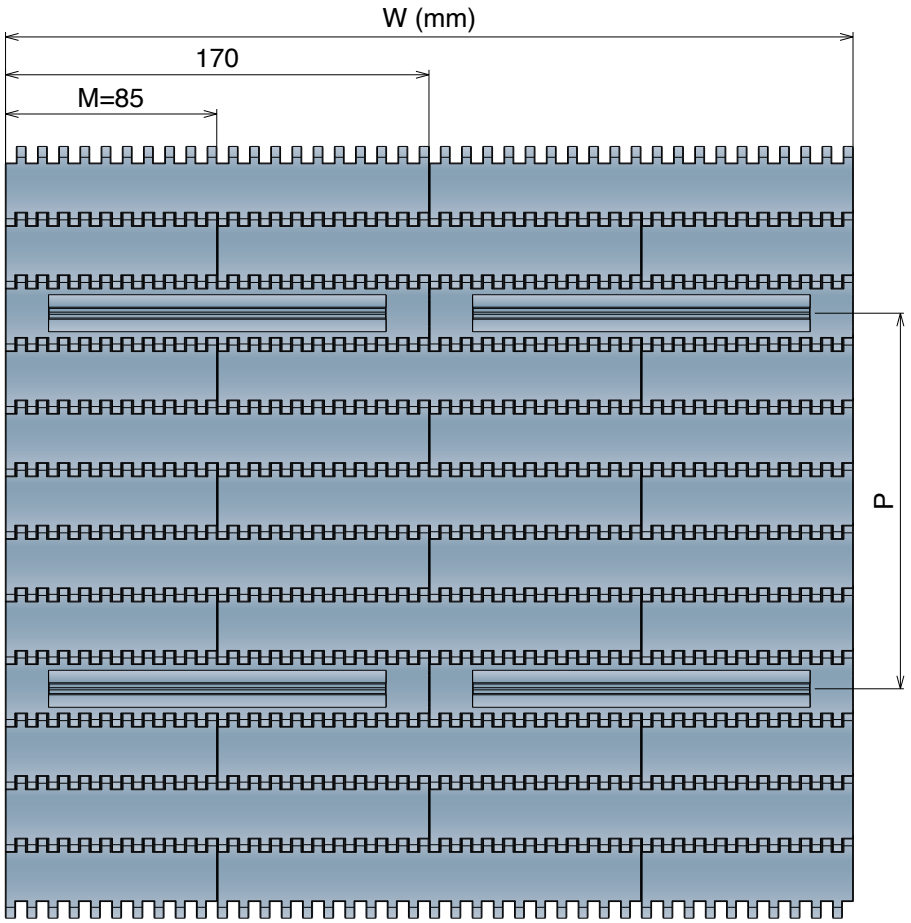

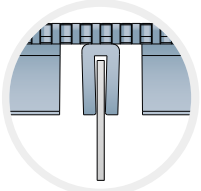

Notch utility
RETURN SECTION
with Bar-cap

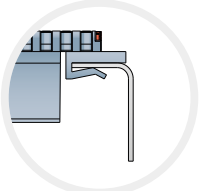

Side indent utility
RETURN SECTION
with Z-Profile & J-Profile

Oadby Core product range
Oadby Available from stock in Leicester
Easy Available from stock in Italy
Standard Produced to order in Italy

Request for quotation

Technical drawing

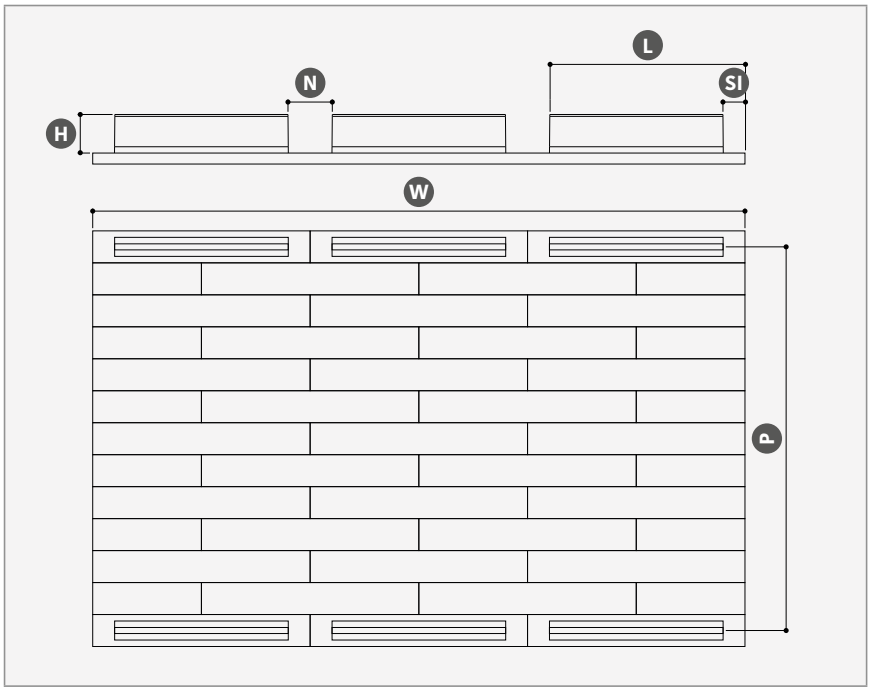

Please fill out the following form or add dimensions into the drawing.

Company

Sales contact

Contact

Date

For different combination, please ask to your sales representative.

Fill out the form and send to your sales contact or to:
info@movexii.com

Technical features

Dimension expressed in millimeter

Belt surface	Flat Top (FT)	Flush Grid (FG)	Grip Top (GT)	
Material & colour	**LFA**	LFW	**LFB**	**PP**	PPW
W - Width	Standard (85 multiple)		Special (17 multiple)	
H - Flight height	Standard	Standard	Standard	Special (Max 76)
	30	51	76	
P - Pitch	Number of pitches or distance between flights (25,4 mm multiple)			
SI - Side Indent*	No	17	30	50
Notch*	No	Single	Double	Triple
	N - Notch width (preferred 34 or 60 mm)		L - Notch distance (2 or more)	

Configuration recommended

Dimensions expressed in millimeter

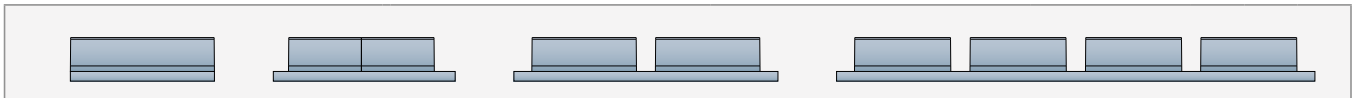

Width ≤ 170 | 170 > Width ≤ 425 | 425 > Width ≤ 850 | Width > 850

550 *PRO* FT

Tappeto Modulare 550 PRO FT, H=8,7 K330
Modular Belt Series 550 PRO FT, H=8,7 K330 / Modulare Mattenkette 550 PRO FT, H=8,7 K330

CODE STRUCTURE GUIDE (Example) — **Backflex radius min.:** 25 mm

5227	01	9330	A
Series	*Material	Width	Version

pg. 321/322 pg. 651>661

25.4mm PITCH

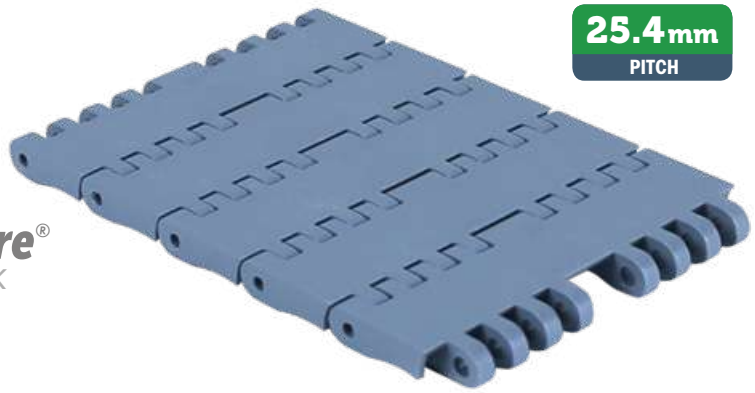

550 PRO FT & PRO M
SAMPLE BOX
Art.-Nr. **5227018888A**

Pin Sphere® AUTOLOCK

- Easier installation
- Quicker maintenance
- 100% interchangeable

***Material**

LFA - Code 01
Low friction Acetal
Easy Delivery

Max w. load:	2300 N
Weight:	8,5 kg/m²
Temp. range dry:	-40÷80 °C
Temp. range wet:	-40÷65 °C
Pin material:	PBT white

MX - Code 03
Performance PBT

Max w. load:	1850 N
Weight:	8,2 kg/m²
Temp. range dry:	-40÷120 °C
Temp. range wet:	-40÷60 °C
Pin material:	POM grey

PFX - Code 30
Extra performance PBT

Max w. load:	1850 N
Weight:	8,2 kg/m²
Temp. range dry:	-40÷120 °C
Temp. range wet:	-40÷60 °C
Pin material:	POM grey

THE BEST CHOICE FOR DRY RUNNING APPLICATIONS

Version A - Standard

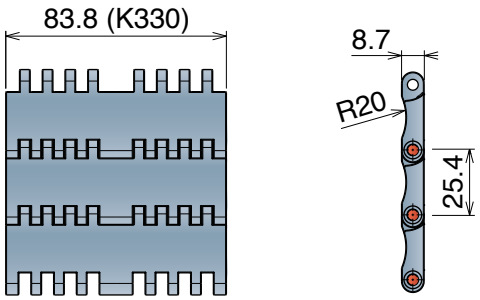

Advantages:

- Optimized product support
- Superior flatness
- Low wear
- Bi-directional

Version C - With 2 Positioner

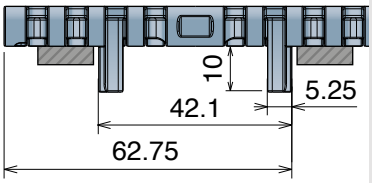

Version A - Standard

Series	Material	Width	Version
5227	*	9330	A

Version C - With 2 Positioners

Series	Material	Width	Version
5227	*	9330	C

550 *PRO* FT & 550 *PRO* FT

The perfect combination

- Same height between guide and center sprockets (S Dimension)
- Same speed for curved and straight
- Unique sprocket for curved and straight

Layout with 550 Pro M and 550 PRO FT

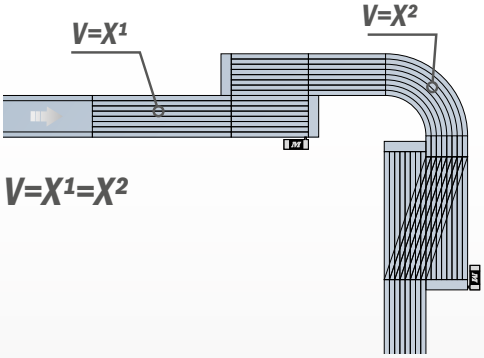

V=X¹=X²

Oadby Core product range
Oadby Available from stock in Leicester
Easy Available from stock in Italy
Standard Produced to order in Italy
Movex®

550 *PRO* M

Tappeto Modulare 550 PRO M, H=8,7 K330
Modular Belt Series 550 PRO M, H=8,7 K330 /Modulare Mattenkette 550 PRO M, H=8,7 K330

CODE STRUCTURE GUIDE (Example) — **Backflex radius min.:** 15 mm

5228	30	9330	C
Series	*Material	Width	Version

10 feet 3.048 m — 240 links | pg. 321/322 | pg. 162 | pg. 651>661

25.4mm PITCH

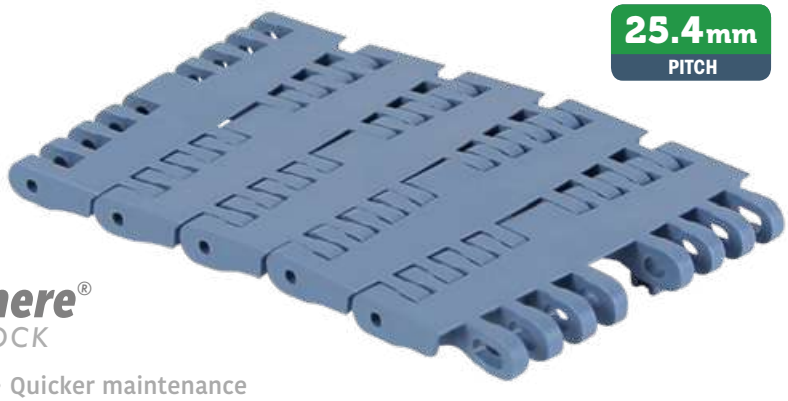

MAGNETIC SYSTEM

550 PRO FT & PRO M
SAMPLE BOX
Art.-Nr. **5227018888A**

Pin Sphere® AUTOLOCK

- Easier installation • Quicker maintenance
- 100% interchangeable

***Material**

LFA - Code 01
Low friction Acetal
Easy Delivery

Max w. load:	2500 N
Weight:	8,2 kg/m²
Temp. range dry:	-40÷80 °C
Temp. range wet:	-40÷65 °C
Pin material:	Ferritic Stainless Steel

MX - Code 03
Performance PBT

Max w. load:	2000 N
Weight:	8,0 kg/m²
Temp. range dry:	-40÷120 °C
Temp. range wet:	-40÷60 °C
Pin material:	Ferritic Stainless Steel

PFX - Code 30
Extra performance PBT

Max w. load:	2000 N
Weight:	8,0 kg/m²
Temp. range dry:	-40÷120 °C
Temp. range wet:	-40÷60 °C
Pin material:	Ferritic Stainless Steel

THE BEST CHOICE FOR DRY RUNNING APPLICATIONS

Version C - With 2 Positioner

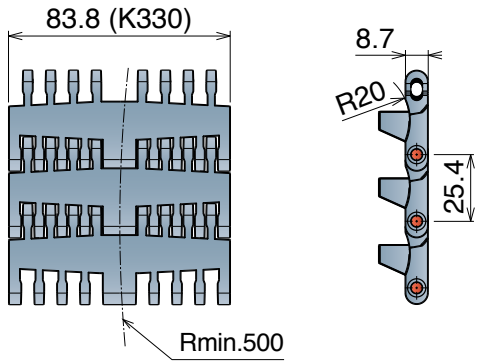

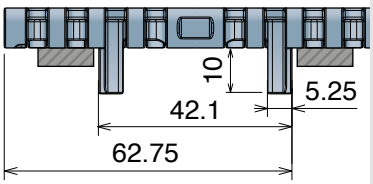

Advantages:

- Optimized product support
- Superior flatness
- Low wear
- Bi-directional

Version C - With 2 Positioners

Series	Material	Width	Version
5228	*	9330	C

550 *PRO* FT & 550 *PRO* FT

The perfect combination

- Same height between guide and center sprockets (S Dimension)
- Same speed for curved and straight
- Unique sprocket for curved and straight

Layout with 550 Pro M and 550 PRO FT

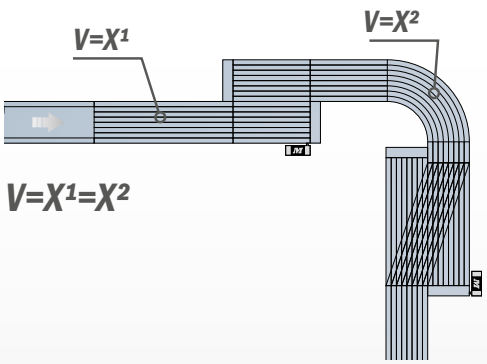

551

Pitch 25,4 mm
H= 12,7 mm

551 FT
551 FTT
551 GT
551 GT *Side indent*
551 LBP
551 PRO LBP

551 FT

Tappeto Modulare 551 FT, H=12,7 M=85
Modular Belt Series 551 FT, H=12,7 M=85 / Modulare Mattenkette 551 FT, H=12,7 M=85

CODE STRUCTURE GUIDE (Example)

Backflex radius min.: 25 mm

5231	01	0085	A
Series	*Material	Width	Version

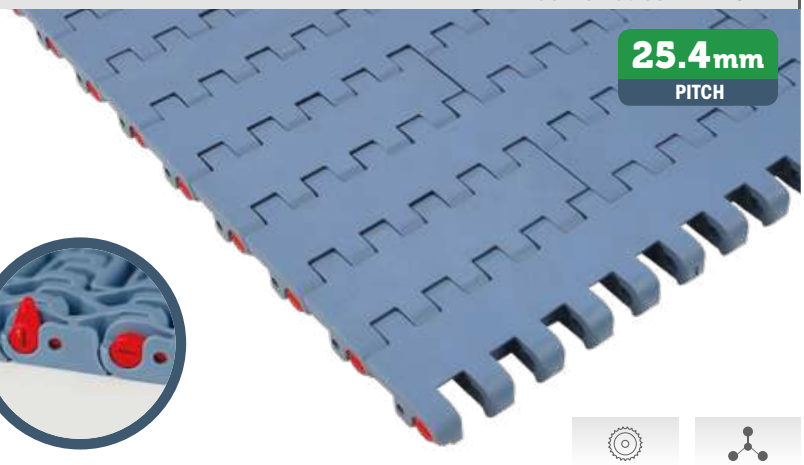

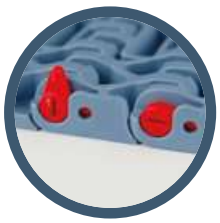

SAMPLE BOX
Art.-Nr. 5231018888A

pg. 323-324 pg. 651>661

***Material**

LFA - Code 01
Low friction Acetal

Easy Delivery

Max w. load:	41500 N/m
Weight:	12,5 kg/m²
Temp. range dry:	-40÷80 °C
Temp. range wet:	-40÷65 °C
Pin material:	PBT white

PP - Code 02
Polypropylene

Max w. load:	27000 N/m
Weight:	10,0 kg/m²
Temp. range dry:	4÷104 °C
Temp. range wet:	4÷104 °C
Pin material:	PP blue

MX - Code 03
Performance PBT

Max w. load:	33500 N/m
Weight:	12,0 kg/m²
Temp. range dry:	-40÷120 °C
Temp. range wet:	-40÷60 °C
Pin material:	POM grey

DKM - Code 16
Aramide Reinforced Acetal

Max w. load:	41500 N/m
Weight:	12,5 kg/m²
Temp. range dry:	-40÷80 °C
Temp. range wet:	-40÷65 °C
Pin material:	PBT white

MWX - Code 17
Polyamide Composite

Max w. load:	41500 N/m
Weight:	13,0 kg/m²
Temp. range dry:	-40÷104 °C
Temp. range wet:	NR
Pin material:	PBT white

MPX - Code 25
Lubricated Acetal

Max w. load:	41500 N/m
Weight:	12,5 kg/m²
Temp. range dry:	-40÷80 °C
Temp. range wet:	-40÷65 °C
Pin material:	PBT white

PFX - Code 30
Extra performance PBT

Max w. load:	33500 N/m
Weight:	12,0 kg/m²
Temp. range dry:	-40÷120 °C
Temp. range wet:	-40÷60 °C
Pin material:	POM grey

THE BEST CHOICE FOR DRY RUNNING APPLICATIONS

Version A - Standard

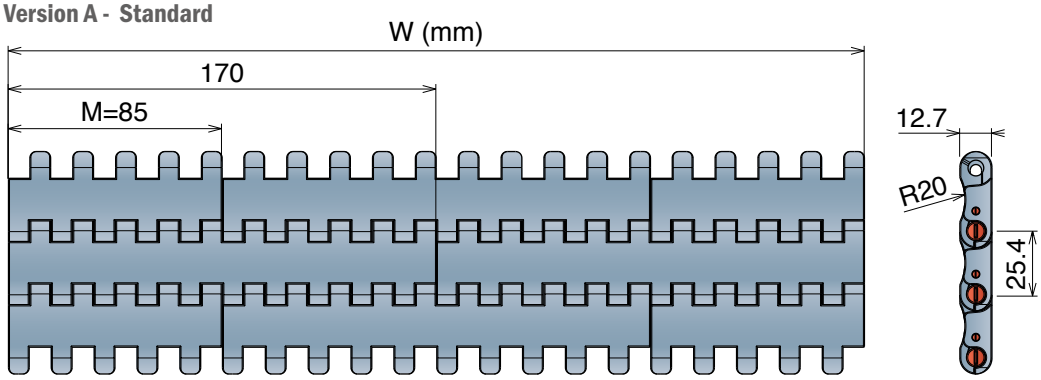

Version B - With 1 Positioner

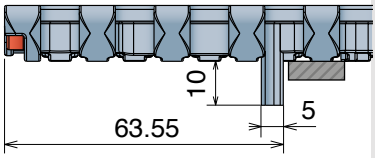

Version C - With 2 Positioner

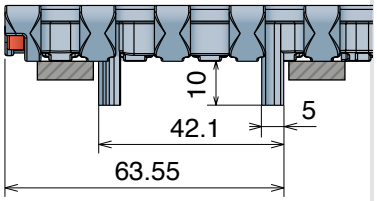

Version A - Standard

Series	Material	Width	Version
5231	*	0085	A
5231	*	0170	A
5231	*	0255	A
5231	*	0340	A
5231	*	0425	A
5231	*	0510	A
5231	*	0595	A
5231	*	0680	A
5231	*	0765	A
5231	*	0850	A
5231	*	0935	A
5231	*	1020	A
5231	*	1105	A
5231	*	1190	A
5231	*	1275	A
5231	*	1360	A
5231	*	1445	A
5231	*	1530	A

Version B - With 1 Positioner

Series	Material	Width	Version
5231	*	0085	B
5231	*	0170	B
5231	*	0255	B
5231	*	0340	B
5231	*	0425	B
5231	*	0510	B
5231	*	0595	B
5231	*	0680	B
5231	*	0765	B
5231	*	0850	B
5231	*	0935	B
5231	*	1020	B
5231	*	1105	B
5231	*	1190	B
5231	*	1275	B
5231	*	1360	B
5231	*	1445	B
5231	*	1530	B

Version C - With 2 Positioners

Series	Material	Width	Version
5231	*	0085	C
5231	*	0170	C
5231	*	0255	C
5231	*	0340	C
5231	*	0425	C
5231	*	0510	C
5231	*	0595	C
5231	*	0680	C
5231	*	0765	C
5231	*	0850	C
5231	*	0935	C
5231	*	1020	C
5231	*	1105	C
5231	*	1190	C
5231	*	1275	C
5231	*	1360	C
5231	*	1445	C
5231	*	1530	C

551 FTT

Tappeto Modulare 551 FTT, H=12,7 M=85
Modular Belt Series 551 FTT, H=12,7 M=85 / Modulare Mattenkette 551 FTT, H=12,7 M=85

CODE STRUCTURE GUIDE (Example)

Backflex radius min.: 25 mm

5236	01	0085	C
Series	*Material	Width	Version

pg. 323-324 pg. 651>661

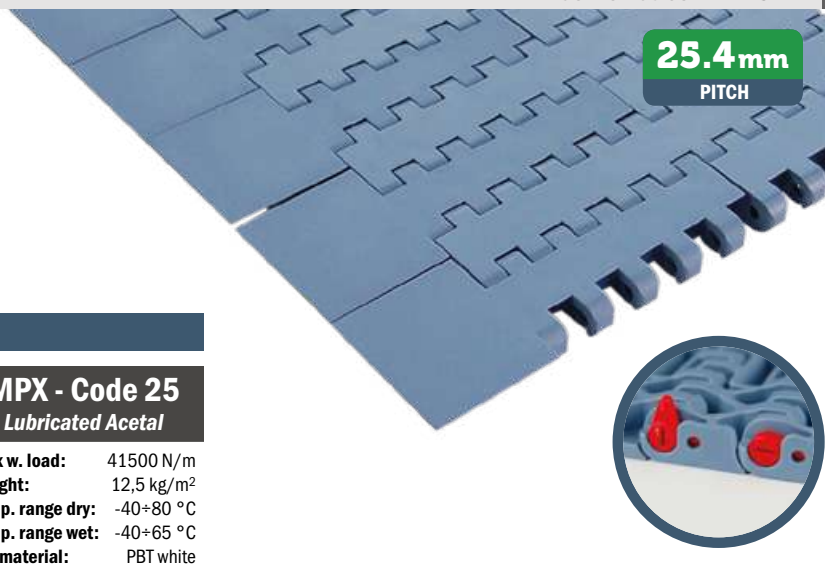

***Material**

LFA - Code 01 *Low friction Acetal*		MX - Code 03 *Performance PBT*		MPX - Code 25 *Lubricated Acetal*	
Max w. load:	41500 N/m	**Max w. load:**	33500 N/m	**Max w. load:**	41500 N/m
Weight:	12,5 kg/m²	**Weight:**	12,0 kg/m²	**Weight:**	12,5 kg/m²
Temp. range dry:	-40÷80 °C	**Temp. range dry:**	-40÷120 °C	**Temp. range dry:**	-40÷80 °C
Temp. range wet:	-40÷65 °C	**Temp. range wet:**	-40÷60 °C	**Temp. range wet:**	-40÷65 °C
Pin material:	PBT white	**Pin material:**	POM grey	**Pin material:**	PBT white

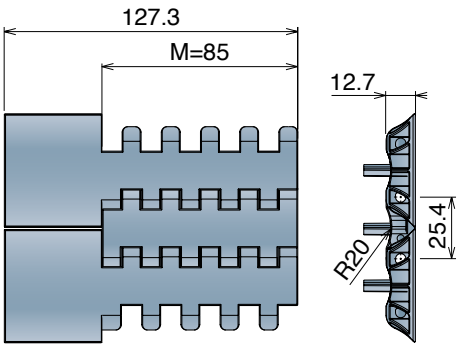

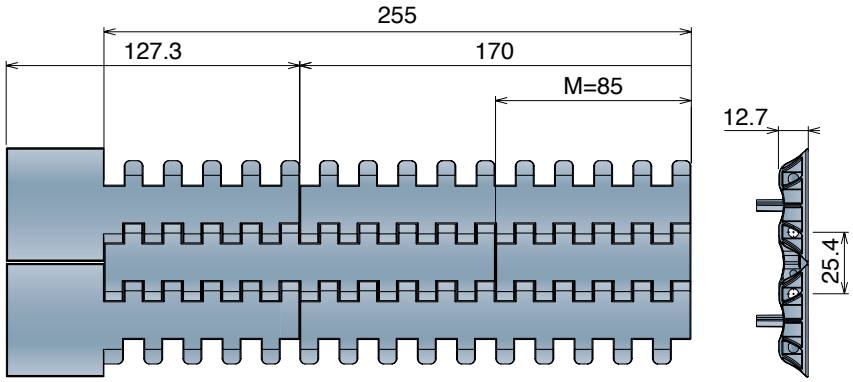

Version C

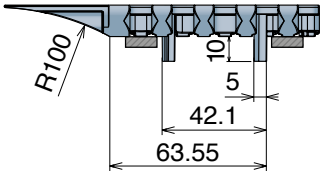

Series	Material	Width	Version
5236	*	0085	C

Version CN - Near

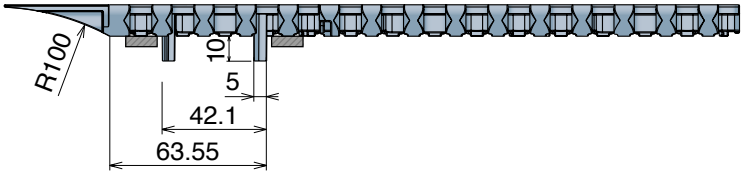

Version CO - Opposite

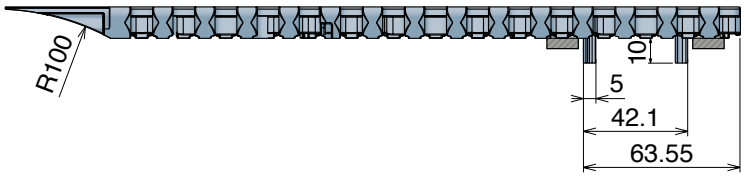

Max working load (N)	
Width	85
LFA	3500
MX	2800
MPX	3500

Version CN - Near

Series	Material	Width	Version
5236	*	0170	CN
5236	*	0255	CN

Version CO - Opposite

Series	Material	Width	Version
5236	*	0170	CO
5236	*	0255	CO

Oadby Core product range
Oadby Available from stock in Leicester
Easy Available from stock in Italy
Standard Produced to order in Italy
Movex

551 GT

Tappeto Modulare 551 GT, H=12,7 M=85

Modular Belt Series 551 GT, H=12,7 M=85 / Modulare Mattenkette 551 GT, H=12,7 M=85

CODE STRUCTURE GUIDE (Example)

Backflex radius min.: 50 mm

5233	01	0085	A
Series	*Material	Width	Version

pg. 323-324 pg. 651>661

SAMPLE BOX

Art.-Nr.	5233018888A

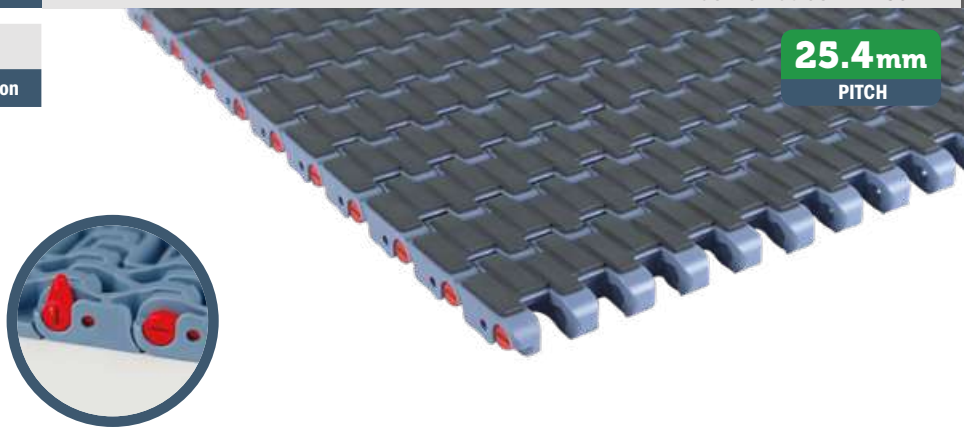

***Material**

LFA - Code 01
Low friction Acetal

Easy Delivery

Max w. load:	41500 N/m
Weight:	13,5 kg/m²
Temp. range dry:	-40÷80 °C
Temp. range wet:	-40÷65 °C
Pin material:	PBT white
Top rubber:	50 ShA-Dark grey

PP - Code 02
Polypropylene

Max w. load:	27000 N/m
Weight:	11,0 kg/m²
Temp. range dry:	4÷80 °C
Temp. range wet:	4÷80 °C
Pin material:	PP blue
Top rubber:	50 ShA-Pigeon blue

MX - Code 03
Performance PBT

Max w. load:	33500 N/m
Weight:	12,7 kg/m²
Temp. range dry:	-40÷120 °C
Temp. range wet:	-40÷60 °C
Pin material:	POM grey
Top rubber:	50 ShA-Dark grey

Version A - Standard

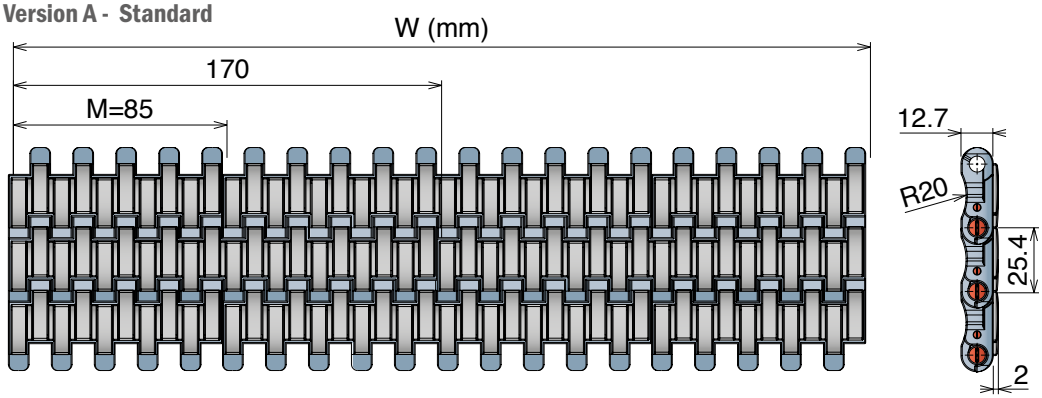

Version B - With 1 Positioner

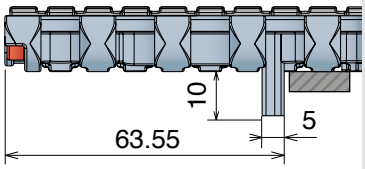

Version C - With 2 Positioner

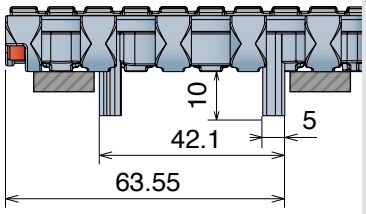

Version A - Standard

Series	Material	Width	Version
5233	*	0085	A
5233	*	0170	A
5233	*	0255	A
5233	*	0340	A
5233	*	0425	A
5233	*	0510	A
5233	*	0595	A
5233	*	0680	A
5233	*	0765	A
5233	*	0850	A
5233	*	0935	A
5233	*	1020	A
5233	*	1105	A
5233	*	1190	A
5233	*	1275	A
5233	*	1360	A
5233	*	1445	A
5233	*	1530	A

Version B - With 1 Positioner

Series	Material	Width	Version
5233	*	0085	B
5233	*	0170	B
5233	*	0255	B
5233	*	0340	B
5233	*	0425	B
5233	*	0510	B
5233	*	0595	B
5233	*	0680	B
5233	*	0765	B
5233	*	0850	B
5233	*	0935	B
5233	*	1020	B
5233	*	1105	B
5233	*	1190	B
5233	*	1275	B
5233	*	1360	B
5233	*	1445	B
5233	*	1530	B

Version C - With 2 Positioners

Series	Material	Width	Version
5233	*	0085	C
5233	*	0170	C
5233	*	0255	C
5233	*	0340	C
5233	*	0425	C
5233	*	0510	C
5233	*	0595	C
5233	*	0680	C
5233	*	0765	C
5233	*	0850	C
5233	*	0935	C
5233	*	1020	C
5233	*	1105	C
5233	*	1190	C
5233	*	1275	C
5233	*	1360	C
5233	*	1445	C
5233	*	1530	C

551 GT *Side indent*

Tappeto Modulare 551 GT, H=12,7 M=85

Modular Belt Series 551 GT, H=12,7 M=85 / Modulare Mattenkette 551 GT, H=12,7 M=85

CODE STRUCTURE GUIDE (Example)

Backflex radius min.: 50 mm

5235	01	0255	A
Series	*Material	Width	Version

pg. 323-324 pg. 651>661

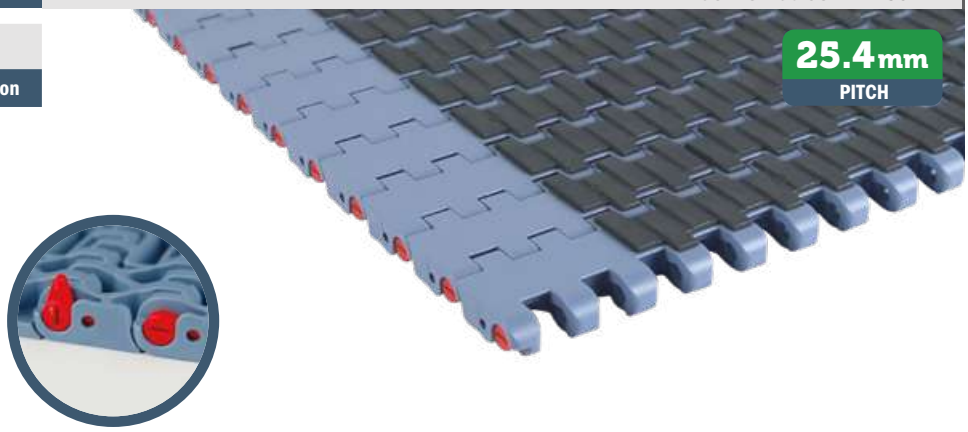

*Material

LFA - Code 01
Low friction Acetal

Easy Delivery

Max w. load: 41500 N/m
Weight: 13,5 kg/m²
Temp. range dry: -40÷80 °C
Temp. range wet: -40÷65 °C
Pin material: PBT white
Top rubber: 50 ShA-Dark grey

PP - Code 02
Polypropylene

Max w. load: 27000 N/m
Weight: 11,0 kg/m²
Temp. range dry: 4÷80 °C
Temp. range wet: 4÷80 °C
Pin material: PP blue
Top rubber: 50 ShA-Pigeon blue

MX - Code 03
Performance PBT

Max w. load: 33500 N/m
Weight: 12,7 kg/m²
Temp. range dry: -40÷120 °C
Temp. range wet: -40÷60 °C
Pin material: POM grey
Top rubber: 50 ShA-Dark grey

Version A - Standard

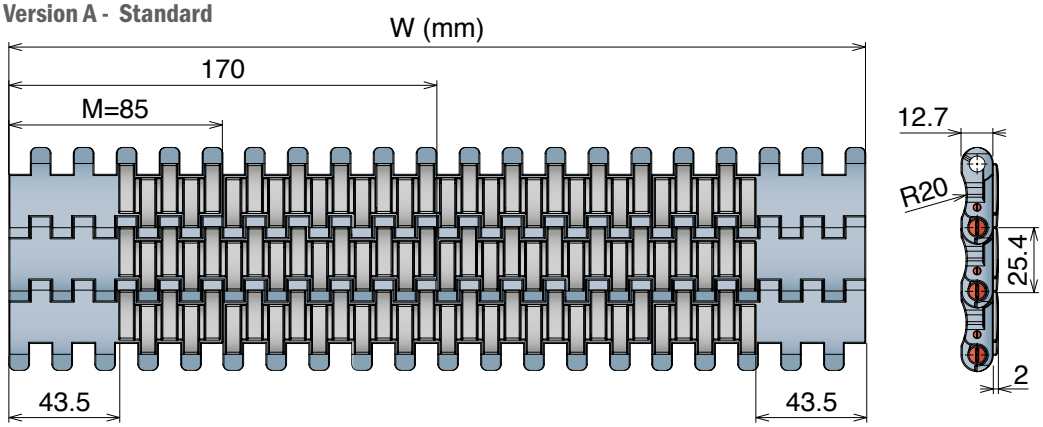

Version B - With 1 Positioner

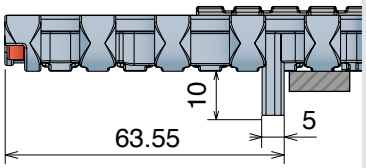

Version C - With 2 Positioner

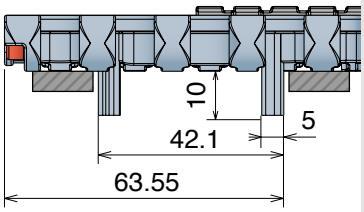

Version A - Standard

Series	Material	Width	Version
5235	*	0255	A
5235	*	0340	A
5235	*	0425	A
5235	*	0510	A
5235	*	0595	A
5235	*	0680	A
5235	*	0765	A
5235	*	0850	A
5235	*	0935	A
5235	*	1020	A
5235	*	1105	A
5235	*	1190	A
5235	*	1275	A
5235	*	1360	A
5235	*	1445	A
5235	*	1530	A

Version B - With 1 Positioner

Series	Material	Width	Version
5235	*	0255	B
5235	*	0340	B
5235	*	0425	B
5235	*	0510	B
5235	*	0595	B
5235	*	0680	B
5235	*	0765	B
5235	*	0850	B
5235	*	0935	B
5235	*	1020	B
5235	*	1105	B
5235	*	1190	B
5235	*	1275	B
5235	*	1360	B
5235	*	1445	B
5235	*	1530	B

Version C - With 2 Positioners

Series	Material	Width	Version
5235	*	0255	C
5235	*	0340	C
5235	*	0425	C
5235	*	0510	C
5235	*	0595	C
5235	*	0680	C
5235	*	0765	C
5235	*	0850	C
5235	*	0935	C
5235	*	1020	C
5235	*	1105	C
5235	*	1190	C
5235	*	1275	C
5235	*	1360	C
5235	*	1445	C
5235	*	1530	C

Oadby Core product range
Oadby Available from stock in Leicester
Easy Available from stock in Italy
Standard Produced to order in Italy

Movex

551 LBP

Tappeto Modulare 551 LBP, H=12,7 M=85
Modular Belt Series 551 LBP, H=12,7 M=85 / Modulare Mattenkette 551 LBP, H=12,7 M=85

CODE STRUCTURE GUIDE (Example)

Backflex radius min.: 120 mm

5234	01	0085	A
Series	*Material	Width	Version

pg. 323-324 pg. 651>661

SAMPLE BOX
Art.-Nr. 5234018888A

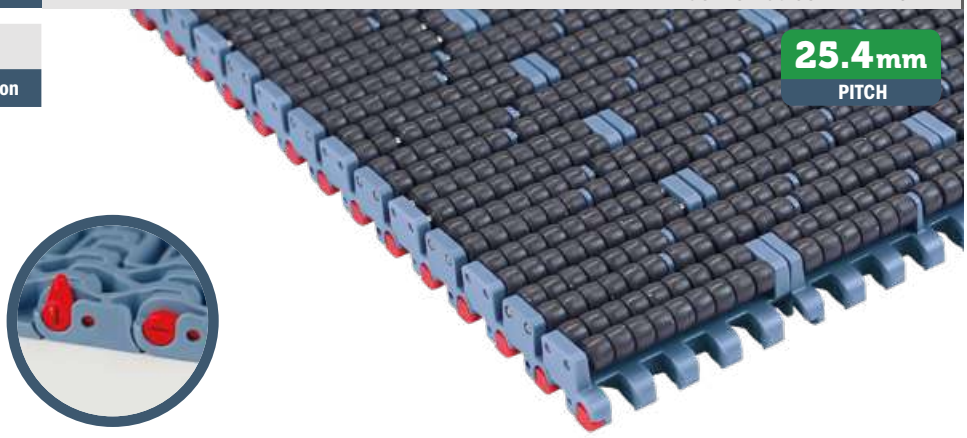

Material

LFA - Code 01
Low friction Acetal

Max w. load:	41500 N/m
Weight:	26,9 kg/m²
Temp. range dry:	-40÷80 °C
Temp. range wet:	-40÷65 °C
Pin material:	PBT white

Version A - Standard

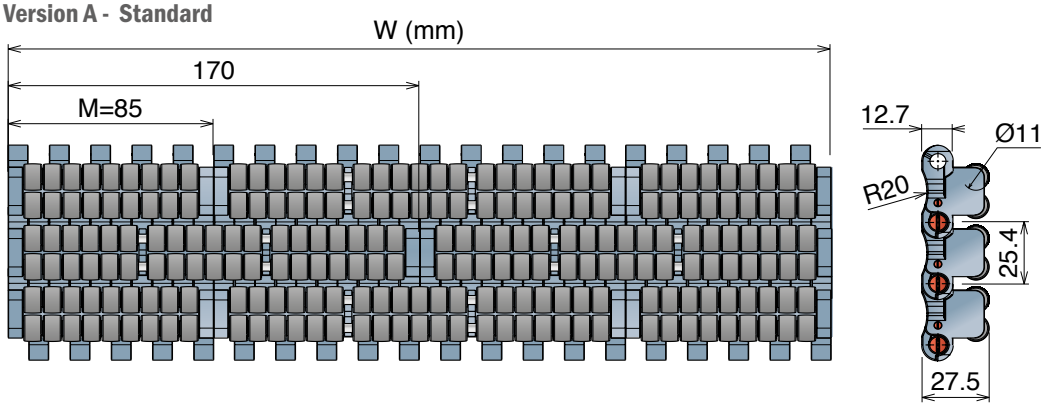

Version B - With 1 Positioner

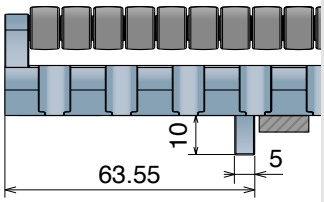

Version C - With 2 Positioner

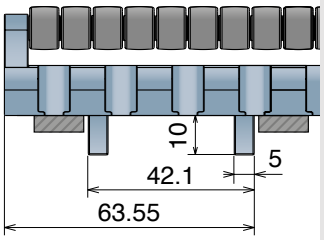

Version A - Standard

Series	Material	Width	Version
5234	01	0085	A
5234	01	0170	A
5234	01	0255	A
5234	01	0340	A
5234	01	0425	A
5234	01	0510	A
5234	01	0595	A
5234	01	0680	A
5234	01	0765	A
5234	01	0850	A
5234	01	0935	A
5234	01	1020	A
5234	01	1105	A
5234	01	1190	A
5234	01	1275	A
5234	01	1360	A
5234	01	1445	A
5234	01	1530	A

Version B - With 1 Positioner

Series	Material	Width	Version
5234	01	0085	B
5234	01	0170	B
5234	01	0255	B
5234	01	0340	B
5234	01	0425	B
5234	01	0510	B
5234	01	0595	B
5234	01	0680	B
5234	01	0765	B
5234	01	0850	B
5234	01	0935	B
5234	01	1020	B
5234	01	1105	B
5234	01	1190	B
5234	01	1275	B
5234	01	1360	B
5234	01	1445	B
5234	01	1530	B

Version C - With 2 Positioners

Series	Material	Width	Version
5234	01	0085	C
5234	01	0170	C
5234	01	0255	C
5234	01	0340	C
5234	01	0425	C
5234	01	0510	C
5234	01	0595	C
5234	01	0680	C
5234	01	0765	C
5234	01	0850	C
5234	01	0935	C
5234	01	1020	C
5234	01	1105	C
5234	01	1190	C
5234	01	1275	C
5234	01	1360	C
5234	01	1445	C
5234	01	1530	C

551 PRO LBP

Tappeto Modulare 551 PRO LBP, H=12,7 M=85
Modular Belt Series 551 PRO LBP, H=12,7 M=85 / Modulare Mattenkette 551 PRO LBP, H=12,7 M=85

CODE STRUCTURE GUIDE (Example)

Backflex radius min.: 100 mm

5240	01	0085	A
Series	*Material	Width	Version

pg. 323-324 pg. 651>661

SAMPLE BOX
Art.-Nr. 5240018888A

Material

LFA - Code 01
Low friction Acetal

Easy Delivery

Max w. load:	41500 N/m
Weight SS pin:	13,8 kg/m²
Weight Plastic pin:	11,0 kg/m²
Temp. range dry:	-40÷80 °C
Temp. range wet:	-40÷65 °C
Pin material:	PBT white

PFX Roller

THE BEST CHOICE TO REACH THE LOWEST FRICTION

Version A - Standard

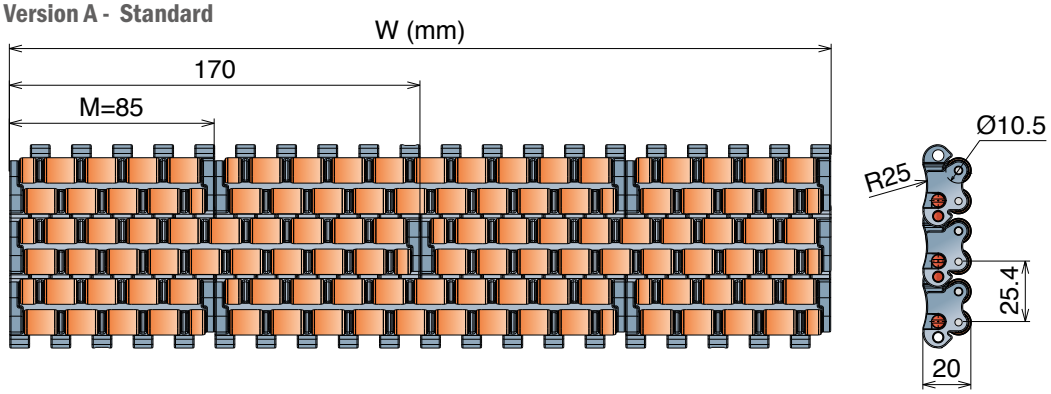

Version B - With 1 Positioner

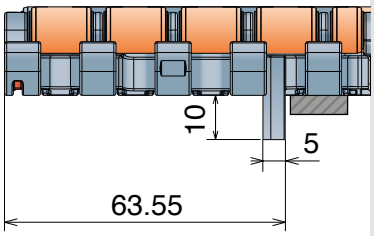

Version C - With 2 Positioner

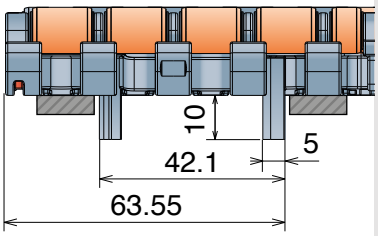

Stainless steel Pin

Series	Material	Width	Version
5239	01	0085	*
5239	01	0170	*
5239	01	0255	*
5239	01	0340	*
5239	01	0425	*
5239	01	0510	*
5239	01	0595	*
5239	01	0680	*
5239	01	0765	*
5239	01	0850	*
5239	01	0935	*
5239	01	1020	*
5239	01	1105	*
5239	01	1190	*
5239	01	1275	*
5239	01	1360	*
5239	01	1445	*
5239	01	1530	*

Plastic Pin

Series	Material	Width	Version
5240	01	0085	*
5240	01	0170	*
5240	01	0255	*
5240	01	0340	*
5240	01	0425	*
5240	01	0510	*
5240	01	0595	*
5240	01	0680	*
5240	01	0765	*
5240	01	0850	*
5240	01	0935	*
5240	01	1020	*
5240	01	1105	*
5240	01	1190	*
5240	01	1275	*
5240	01	1360	*
5240	01	1445	*
5240	01	1530	*

*Version	
Standard	Add **A**
With 1 Positioner	Add **B**
With 2 Positioners	Add **C**

Oadby Core product range
Oadby Available from stock in Leicester
Easy Available from stock in Italy
Standard Produced to order in Italy

552

Pitch 25,4 mm
H= 12,7 mm

552 FT
552 FT *One track Belt*
552 FTT
552 PT
552 PT *One track Belt*
552 GT

552 GT *Side indent*

Movex®

552 FT

Tappeto Modulare 552 FT, H=12,7 M=3"
Modular Belt Series 552 FT, H=12,7 M=3" / Modulare Mattenkette 552 FT, H=12,7 M=3"

CODE STRUCTURE GUIDE (Example)

Backflex radius min.: 25 mm

5341	01	0009	A
Series	*Material	Width	Version

pg. 325 pg. 651>661

SAMPLE BOX
Art.-Nr. 5341018888A

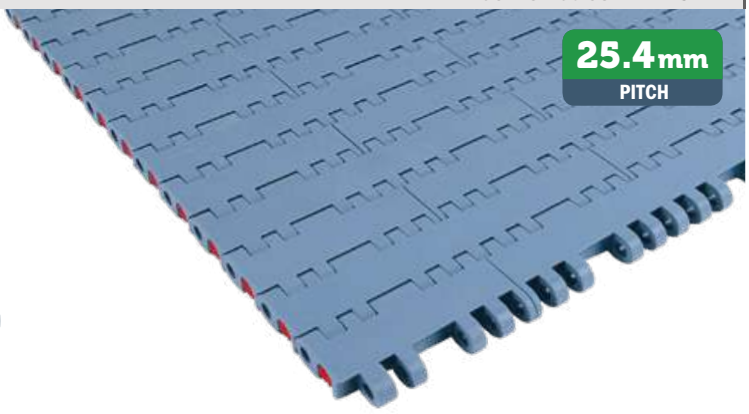

Version A - Standard

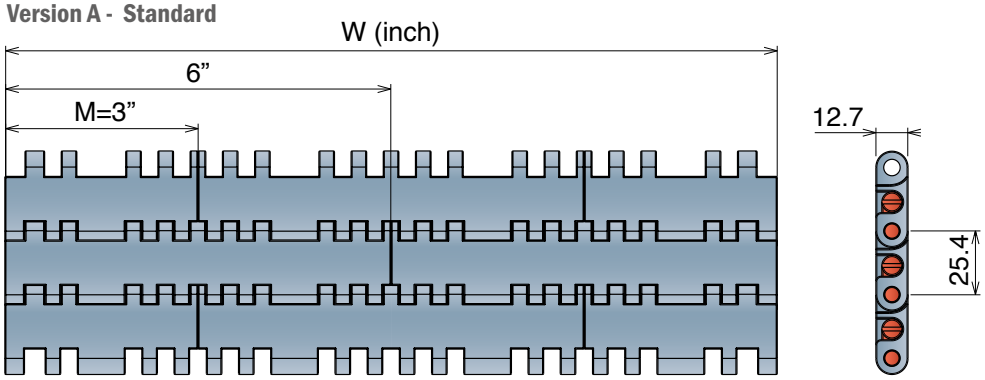

***Material**

LFA - Code 01
Low friction Acetal

Easy Delivery

Max w. load:	41500 N/m
Weight:	13,5 kg/m²
Temp. range dry:	-40÷80 °C
Temp. range wet:	-40÷65 °C
Pin material:	PBT white

MX - Code 03
Performance PBT

Max w. load:	33500 N/m
Weight:	13,0 kg/m²
Temp. range dry:	-40÷120 °C
Temp. range wet:	-40÷60 °C
Pin material:	POM grey

MWX - Code 17
Polyamide Composite

Max w. load:	41500 N/m
Weight:	14,0 kg/m²
Temp. range dry:	-40÷104 °C
Temp. range wet:	NR
Pin material:	PBT white

MPX - Code 25
Lubricated Acetal

Max w. load:	41500 N/m
Weight:	13,5 kg/m²
Temp. range dry:	-40÷80 °C
Temp. range wet:	-40÷65 °C
Pin material:	PBT white

Version A - Standard

Series	Material	Width	Version
5341	*	0009	A
5341	*	0012	A
5341	*	0015	A
5341	*	0018	A
5341	*	0021	A
5341	*	0024	A
5341	*	0027	A
5341	*	0030	A
5341	*	0033	A
5341	*	0036	A
5341	*	0039	A
5341	*	0042	A
5341	*	0045	A
5341	*	0048	A
5341	*	0051	A
5341	*	0054	A

Oadby Core product range
Oadby Available from stock in Leicester
Easy Available from stock in Italy
Standard Produced to order in Italy
Movex

552 FT *One track Belt* Tappeto Modulare 552 FT, H=12,7

Modular Belt Series 552 FT, H=12,7 / Modulare Mattenkette 552 FT, H=12,7

CODE STRUCTURE GUIDE (Example)

Backflex radius min.: 25 mm

5341	01	0003	A
Series	*Material	Width	Version

pg. 325 pg. 651>661

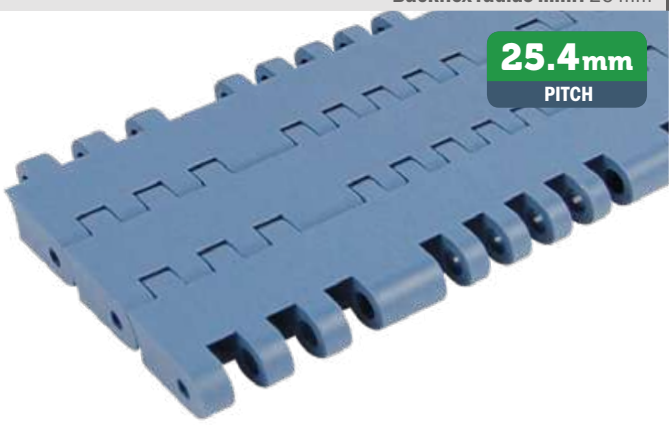

*Material

LFA - Code 01
Low friction Acetal

Easy Delivery

Max w. load: See below
Weight: 13,5 kg/m²
Temp. range dry: -40÷80 °C
Temp. range wet: -40÷65 °C
Pin material: PBT white

MX - Code 03
Performance PBT

Max w. load: See below
Weight: 13,0 kg/m²
Temp. range dry: -40÷120 °C
Temp. range wet: -40÷60 °C
Pin material: POM grey

MWX - Code 17
Polyamide Composite

Max w. load: See below
Weight: 14,0 kg/m²
Temp. range dry: -40÷104 °C
Temp. range wet: NR
Pin material: PBT white

MPX - Code 25
Lubricated Acetal

Max w. load: See below
Weight: 13,5 kg/m²
Temp. range dry: -40÷80 °C
Temp. range wet: -40÷65 °C
Pin material: PBT white

Max working load (N)

Width	K300	K325	K450
LFA	3200	3400	4800
MX	2500	2800	3800
MWX	3200	3400	4800
MPX	3200	3400	4800

Width	K600	K750
LFA	6200	7900
MX	5100	6400
MWX	6200	7900
MPX	6200	7900

Version A - Standard

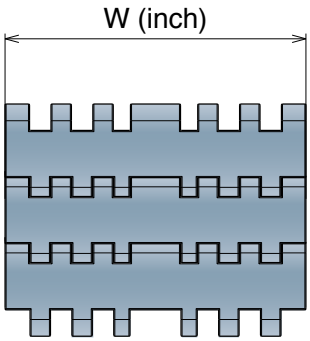

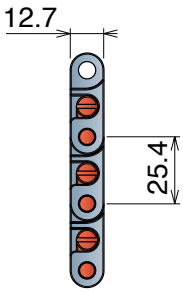

Version C - With 2 Positioner

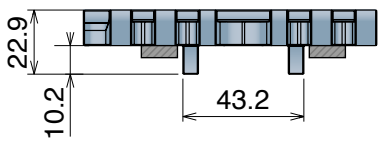

K300 - One track belt

Series	Material	Width	Version
5341	*	0003	A
5341	*	0003	C

K325 - One track belt

Series	Material	Width	Version
5341	*	9325	A
5341	*	9325	C

K450 - One track belt

Series	Material	Width	Version
5341	*	9450	A
5341	*	9450	C

K600 - One track belt

Series	Material	Width	Version
5341	*	0006	A
5341	*	0006	C

K750 - One track belt

Series	Material	Width	Version
5341	*	9750	A
5341	*	9750	C

Movex

Oadby Core product range
Oadby Available from stock in Leicester
Easy Available from stock in Italy
Standard Produced to order in Italy

552 FTT

Tappeto Modulare 552 FTT, H=12,7
Modular Belt Series 552 FTT, H=12,7 / Modulare Mattenkette 552 FTT, H=12,7

CODE STRUCTURE GUIDE (Example)

5346	01	9450	C-R
Series	*Material	Width	Version

pg. 325 pg. 651>661

Backflex radius min.: 25 mm

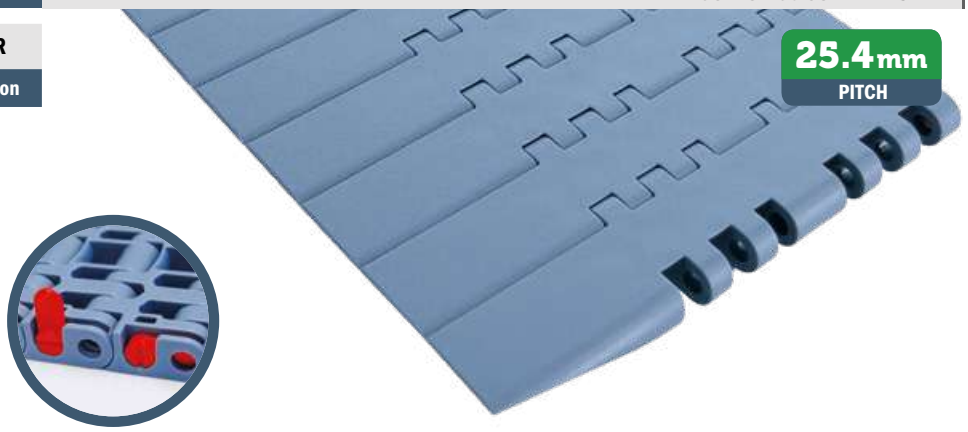

*Material

LFA - Code 01
Low friction Acetal

Max w. load:	See below
Weight:	13,5 kg/m²
Temp. range dry:	-40÷80 °C
Temp. range wet:	-40÷65 °C
Pin material:	PBT white

MX - Code 03
Performance PBT

Max w. load:	See below
Weight:	13,0 kg/m²
Temp. range dry:	-40÷120 °C
Temp. range wet:	-40÷60 °C
Pin material:	POM grey

MWX - Code 17
Polyamide Composite

Max w. load:	See below
Weight:	14,0 kg/m²
Temp. range dry:	-40÷104 °C
Temp. range wet:	NR
Pin material:	PBT white

MPX - Code 25
Lubricated Acetal

Max w. load:	See below
Weight:	13,5 kg/m²
Temp. range dry:	-40÷80 °C
Temp. range wet:	-40÷65 °C
Pin material:	PBT white

Max working load (N)

Width	450	750
LFA	4800	7900
MX	3800	6400
MWX	4800	7900
MPX	4800	7900

552 FTT - DX Version

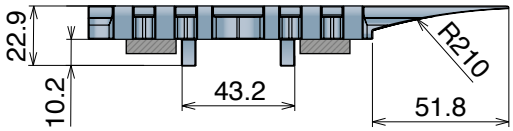

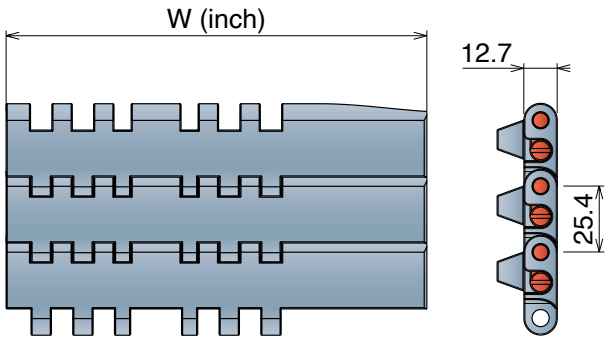

K450 / K750

Series	Material	Width	Version	Total width
5346	*	9450	C - R	160.3
5346	*	9750	C - R	237.4

552 FTT - SX Version

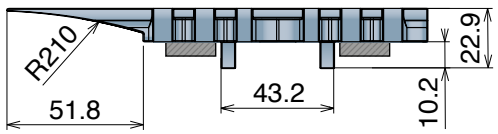

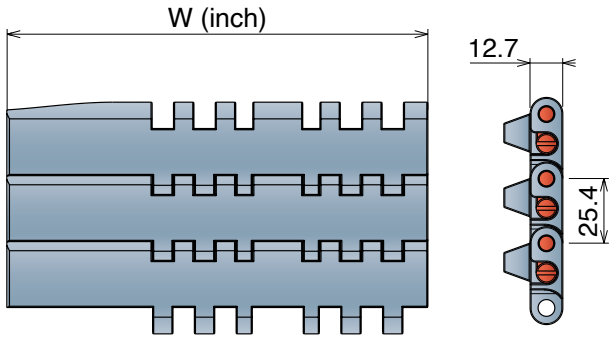

K450 / K750

Series	Material	Width	Version	Total width
5346	*	9450	C - L	160.3
5346	*	9750	C - L	237.4

Oadby Core product range
Oadby Available from stock in Leicester
Easy Available from stock in Italy
Standard Produced to order in Italy

Movex

552 PT Open Surface 8%

Tappeto Modulare 552 PT, H=12,7 M=3"

Modular Belt Series 552 PT, H=12,7 M=3" / Modulare Mattenkette 552 PT, H=12,7 M=3"

CODE STRUCTURE GUIDE (Example)

5342	01	0009	A
Series	*Material	Width	Version

pg. 325 pg. 651>661

Backflex radius min.: 25 mm

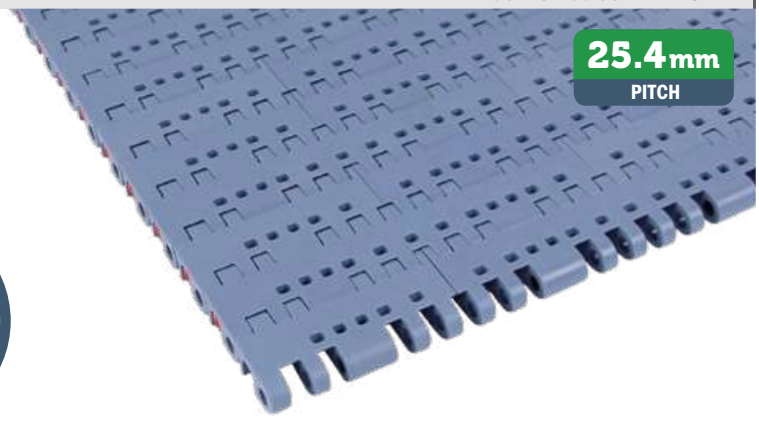

SAMPLE BOX

Art.-Nr. 5342018888A

***Material**

LFA - Code 01
Low friction Acetal

Max w. load:	41500 N/m
Weight:	13,2 kg/m²
Temp. range dry:	-40÷80 °C
Temp. range wet:	-40÷65 °C
Pin material:	PBT white

MX - Code 03
Performance PBT

Max w. load:	33500 N/m
Weight:	12,7 kg/m²
Temp. range dry:	-40÷120 °C
Temp. range wet:	-40÷60 °C
Pin material:	POM grey

MWX - Code 17
Polyamide Composite

Max w. load:	41500 N/m
Weight:	13,7 kg/m²
Temp. range dry:	-40÷104 °C
Temp. range wet:	NR
Pin material:	PBT white

MPX - Code 25
Lubricated Acetal

Max w. load:	41500 N/m
Weight:	13,2 kg/m²
Temp. range dry:	-40÷80 °C
Temp. range wet:	-40÷65 °C
Pin material:	PBT white

Version A - Standard

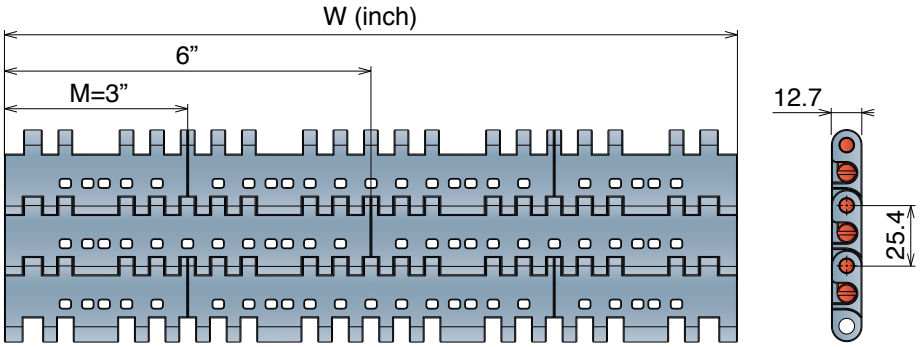

Version A - Standard

Series	Material	Width	Version
5342	*	0009	A
5342	*	0012	A
5342	*	0015	A
5342	*	0018	A
5342	*	0021	A
5342	*	0024	A
5342	*	0027	A
5342	*	0030	A
5342	*	0033	A
5342	*	0036	A
5342	*	0039	A
5342	*	0042	A
5342	*	0045	A
5342	*	0048	A
5342	*	0051	A
5342	*	0054	A

552 PT *One track Belt* Open Surface 8% Tappeto Modulare 552 PT, H=12,7 M=3"

Modular Belt Series 552 PT, H=12,7 M=3" / Modulare Mattenkette 552 PT, H=12,7 M=3"

CODE STRUCTURE GUIDE (Example)

Backflex radius min.: 25 mm

5342	01	0003	A
Series	*Material	Width	Version

pg. 325 pg. 651>661

*Material

LFA - Code 01
Low friction Acetal

Max w. load:	See below
Weight:	13,2 kg/m²
Temp. range dry:	-40÷80 °C
Temp. range wet:	-40÷65 °C
Pin material:	PBT white

MX - Code 03
Performance PBT

Max w. load:	See below
Weight:	12,7 kg/m²
Temp. range dry:	-40÷120 °C
Temp. range wet:	-40÷60 °C
Pin material:	POM grey

MWX - Code 17
Polyamide Composite

Max w. load:	See below
Weight:	13,7 kg/m²
Temp. range dry:	-40÷104 °C
Temp. range wet:	NR
Pin material:	PBT white

MPX - Code 25
Lubricated Acetal

Max w. load:	See below
Weight:	13,2 kg/m²
Temp. range dry:	-40÷80 °C
Temp. range wet:	-40÷65 °C
Pin material:	PBT white

Max working load (N)

Width	300	600
LFA	3200	6300
MX	2500	5100
MWX	3200	6300
MPX	3200	6300

Version A - Standard

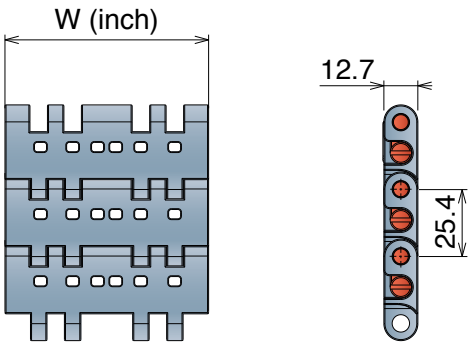

Version C - With 2 Positioner

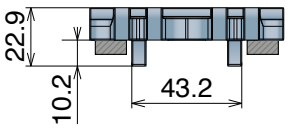

Version A - Standard

Series	Material	Width	Version
5342	*	0003	A
5342	*	0006	A

Version C - With 2 Positioners

Series	Material	Width	Version
5342	*	0003	C
5342	*	0006	C

Oadby Core product range
Oadby Available from stock in Leicester
Easy Available from stock in Italy
Standard Produced to order in Italy
Movex

552 GT

Tappeto Modulare 552 GT, H=12,7 M=3”
Modular Belt Series 552 GT, H=12,7 M=3” / Modulare Mattenkette 552 GT, H=12,7 M=3”

CODE STRUCTURE GUIDE (Example)

Backflex radius min.: 25 mm

5343	01	0009	A
Series	*Material	Width	Version

pg. 325 pg. 651>661

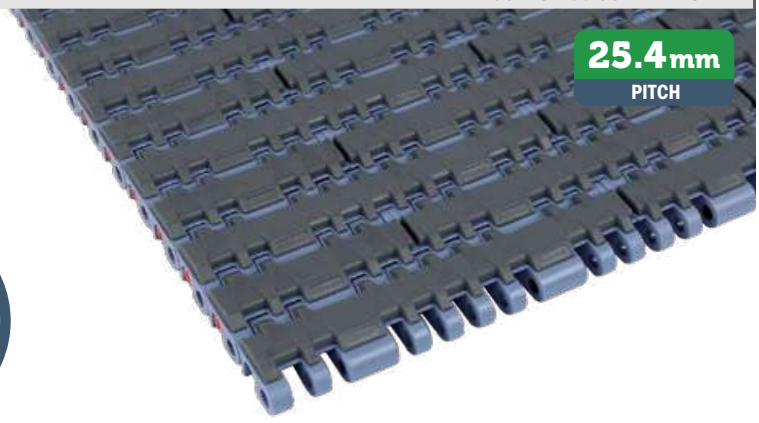

***Material**

LFA - Code 01
Low friction Acetal

Max w. load:	41500 N/m
Weight:	15,5 kg/m²
Temp. range dry:	-40÷80 °C
Temp. range wet:	-40÷65 °C
Pin material:	PBT white
Top rubber:	50 ShA-Dark grey

PP - Code 02
Polypropylene

Max w. load:	27000 N/m
Weight:	13,5 kg/m²
Temp. range dry:	4÷80 °C
Temp. range wet:	4÷80 °C
Pin material:	PP blue
Top rubber:	50 ShA-Black

Version A - Standard

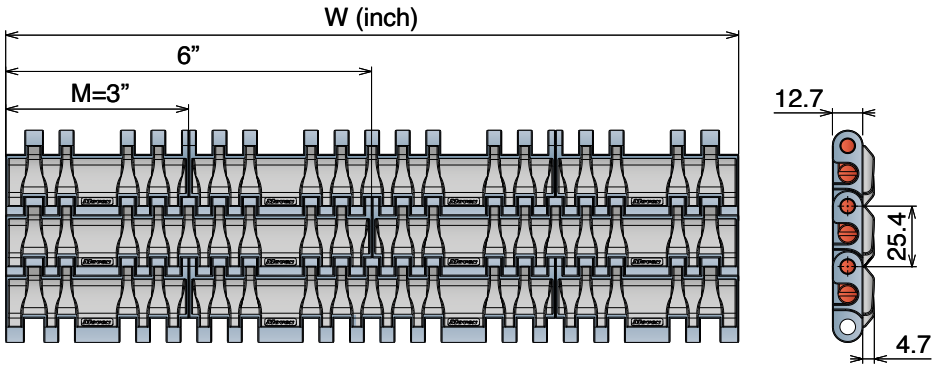

Version A - Standard

Series	Material	Width	Version
5343	*	0009	A
5343	*	0012	A
5343	*	0015	A
5343	*	0018	A
5343	*	0021	A
5343	*	0024	A
5343	*	0027	A
5343	*	0030	A
5343	*	0033	A
5343	*	0036	A
5343	*	0039	A
5343	*	0042	A
5343	*	0045	A
5343	*	0048	A
5343	*	0051	A
5343	*	0054	A

Rubber Thickness 4.7 mm

552 GT *Side indent* Tappeto Modulare 552 GT SI, H=12,7 M=3”

Modular Belt Series 552 GT SI, H=12,7 M=3” / Modulare Mattenkette 552 GT SI, H=12,7 M=3”

CODE STRUCTURE GUIDE (Example)

Backflex radius min.: 25 mm

5345	01	0009	A
Series	*Material	Width	Version

pg. 325 pg. 651>661

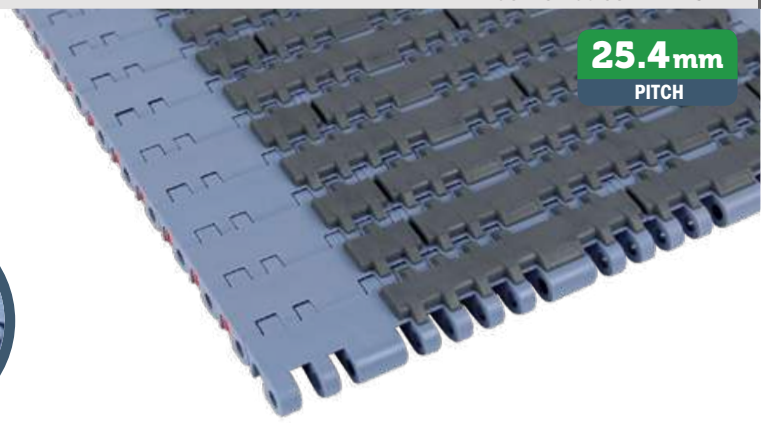

***Material**

LFA - Code 01
Low friction Acetal

Max w. load:	41500 N/m
Weight:	15,5 kg/m²
Temp. range dry:	-40÷80 °C
Temp. range wet:	-40÷65 °C
Pin material:	PBT white
Top rubber:	50 ShA-Dark grey

PP - Code 02
Polypropylene

Max w. load:	27000 N/m
Weight:	13,5 kg/m²
Temp. range dry:	4÷80 °C
Temp. range wet:	4÷80 °C
Pin material:	PP blue
Top rubber:	50 ShA-Black

Version A - Standard

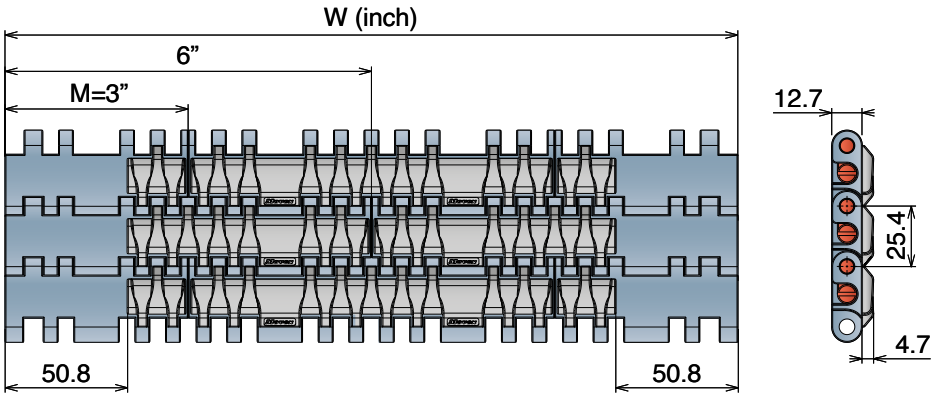

Version A - Standard

Series	Material	Width	Version
5345	*	0009	A
5345	*	0012	A
5345	*	0015	A
5345	*	0018	A
5345	*	0021	A
5345	*	0024	A
5345	*	0027	A
5345	*	0030	A
5345	*	0033	A
5345	*	0036	A
5345	*	0039	A
5345	*	0042	A
5345	*	0045	A
5345	*	0048	A
5345	*	0051	A
5345	*	0054	A

Rubber Thickness 4.7 mm

Oadby Core product range
Oadby Available from stock in Leicester
Easy Available from stock in Italy
Standard Produced to order in Italy

Movex

553

Pitch 25,4 mm
H= 8,7 mm

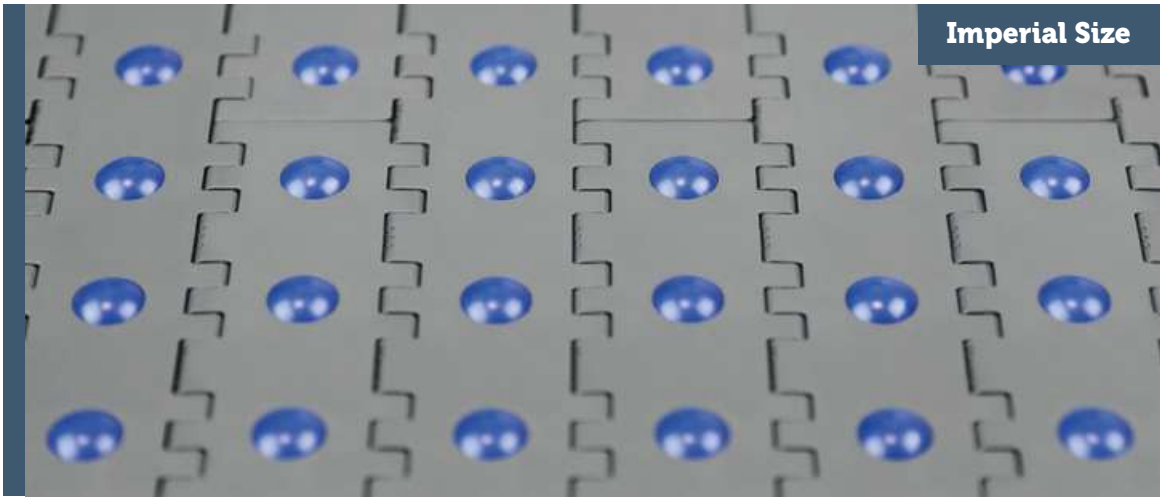

553 FLEXTOP

NEW 553 FLEX TOP Tappeto Modulare 553 FLEXTOP, H=8,7 M=3"

Modular Belt Series 553 FLEXTOP, H=8,7 M=3" / Modulare Mattenkette 553 FLEXTOP, H=8,7 M=3"

Backflex radius min.: 25 mm

The new **Movex® 553 FlexTop** modular belt with self-locking spheres is specifically designed for high-precision material handling, suitable for several applications like logistic centers, packaging stations (food and beverage) and corrugated industries, easily to be integrated into existing systems. The 360° movement possibility makes the belt suitable for diverting, rotation, accumulation and acceleration applications and minimize required maintenance and downtimes. The small pitch between the spheres allows every type of product transfer and is ideal for small and light packages, unlike traditional roller conveyors.

The complete closed sliding belt surface is the perfect solution to carry carton boxes, crates, cans and bottles shrink-wrap packaging and any kind of polybag with Top-Accuracy package control. **553 FlexTop is best choice for material handling applications!**

High strength

Perfect product control

Self cleaning

Great versatility

Long durability

Design and features of 553 FlexTop make it ideal for the transport of several type of products (*e.g. polybags, shrink-wrap packaging*).

The small pitch between the spheres allows for a great product-control.

A complete closed sliding surface, in combination with self-locking spheres, makes the belt design flexible and robust.

The directional belt underneath the flextop belt controls the direction and the speed of the spheres, making this belt 100% versatile.

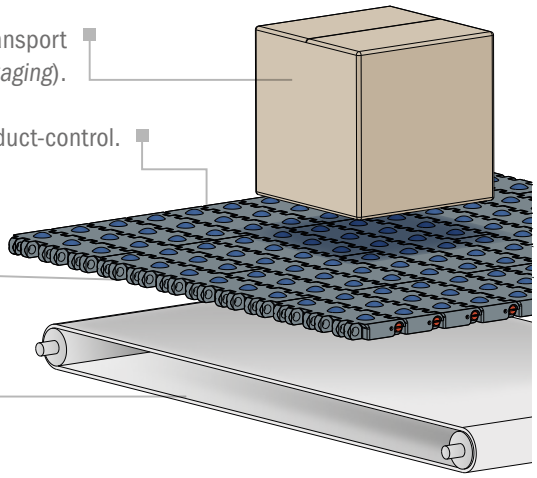

DIVERTING
Side movement

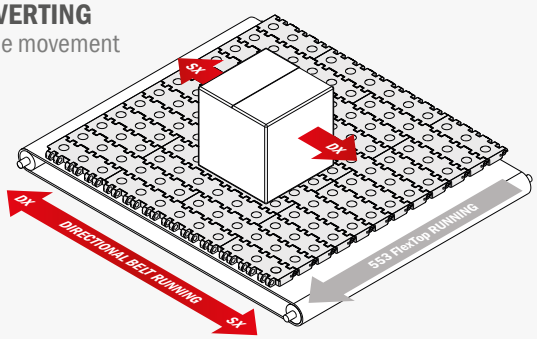

By using a directional belt underneath the Flextop belt, running square to the travel direction, the product can be transferred left and right.

ROTATION
Product stop

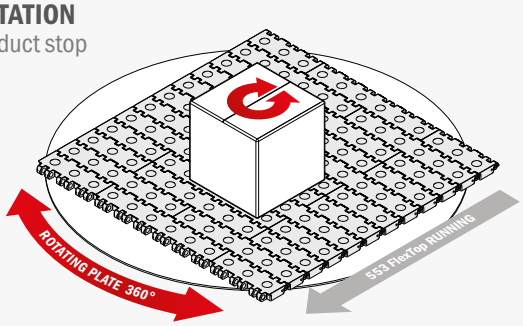

By using a rotating plate underneath the Flextop belt, sphere can rotate by 360°. This option can be used with product stopped or running on the belt, to easily positioning the product.

DINAMIC ROTATION
Product moving

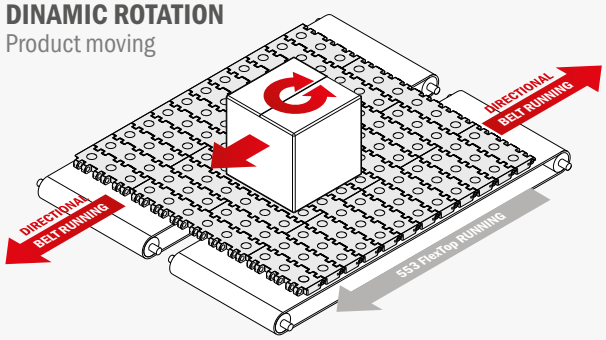

By using two auxiliary belts underneath the Flextop belt, running at opposite direction, the product will start rotating. With this option the Flextop belt can keep running.

ACCELERATION

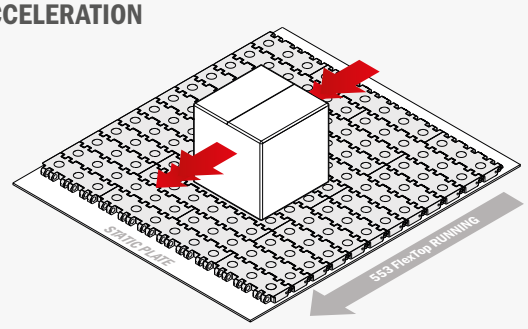

By using a static plate underneath the Flextop belt, spheres will start rotating indipendently, so the speed of the product will result double than the speed of the belt itself.

NEW

553 FLEX TOP Tappeto Modulare 553 FLEXTOP, H=8,7 M=3"

Modular Belt Series 553 FLEXTOP, H=8,7 M=3" / Modulare Mattenkette 553 FLEXTOP, H=8,7 M=3"

CODE STRUCTURE GUIDE (Example)

Backflex radius min.: 25 mm

5530	27	0003	A
Series	*Material	Width	Version

pg. 326 | 553 Sorter + pg. 301 | pg. 651>661

SAMPLE BOX
Art.-Nr. 5530018888A

***Material**

LFG - Code 27
Low friction Acetal

Max w. load:	27500 N/m
Weight:	10,0 kg/m²
Temp. range dry:	-40÷80 °C
Temp. range wet:	-40÷65 °C
Pin material:	PBT white

Sphere Material

High-tech polyamide

Max w. load:	15 N
Sphere diameter:	12,7 mm

Version A - Standard

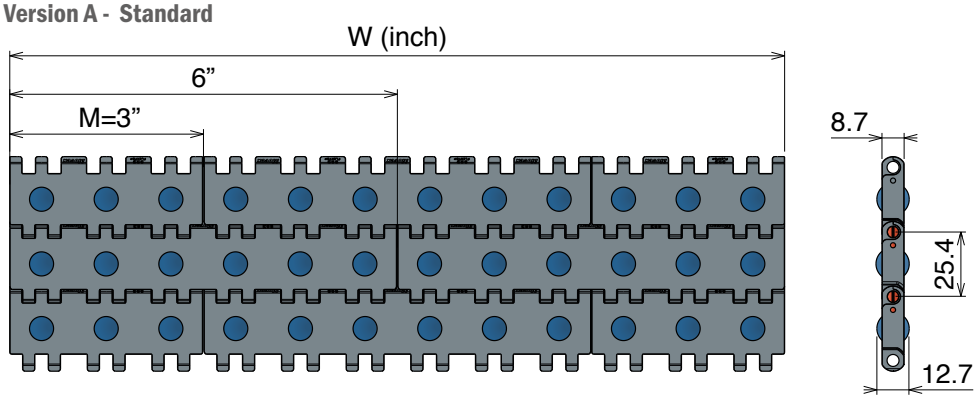

360°

Version A - Standard

Series	Material	Width	Version
5530	*	0003	A
5530	*	0006	A
5530	*	0009	A
5530	*	0012	A
5530	*	0015	A
5530	*	0018	A
5530	*	0021	A
5530	*	0024	A
5530	*	0027	A
5530	*	0030	A
5530	*	0033	A
5530	*	0036	A
5530	*	0039	A
5530	*	0042	A
5530	*	0045	A
5530	*	0048	A
5530	*	0051	A
5530	*	0054	A
5530	*	0057	A

Series	Material	Width	Version
5530	*	0060	A
5530	*	0063	A
5530	*	0066	A
5530	*	0069	A
5530	*	0072	A
5530	*	0075	A
5530	*	0078	A
5530	*	0081	A
5530	*	0084	A
5530	*	0087	A
5530	*	0090	A
5530	*	0093	A
5530	*	0096	A
5530	*	0099	A
5530	*	0102	A
5530	*	0105	A
5530	*	0108	A
5530	*	0111	A
5530	*	0114	A

PATENTED CLOSED GAP

Patented closed gap helps reducing maintenance frequency and increasing productivity.

Continue >>

556

Pitch 25,4 mm
H= 12,7 mm

Imperial Size

556 FT
556 GT

Movex®

556 FT Open Surface 25%

Tappeto Modulare Curvilineo Serie 556 FT, H=12,7 M=3"

Side Flex Modular Belt Series 556 FT, H=12,7 M=3" / Kurvengängige Mattenkette Serie 556 FT, H=12,7 M=3"

CODE STRUCTURE GUIDE (Example)

Backflex radius min.: 25 mm

5431	01	0009	A
Series	*Material	Width	Version

pg. 327 pg. 651>661

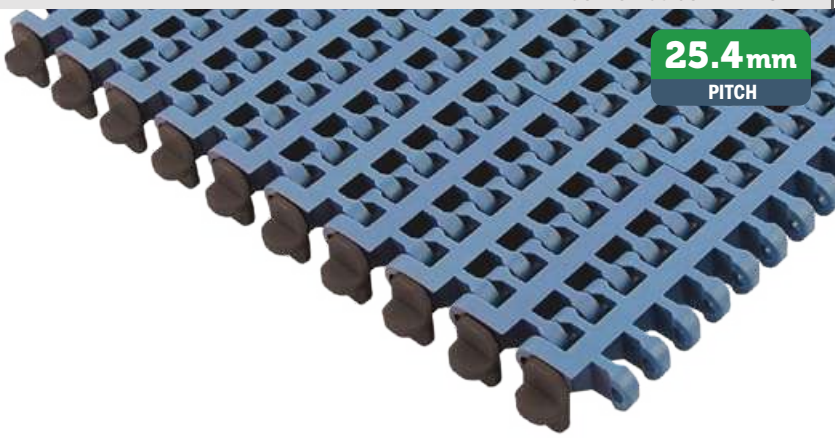

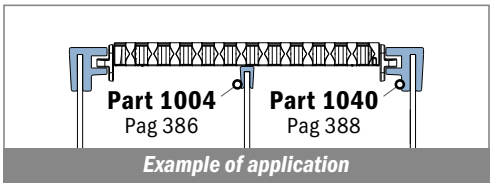

Example of application

*Material

LFA - Code 01
Low friction Acetal

Max w. load:
Straight: 30000 N/m
Curve 2000 N
Weight: 7,5 kg/m²
Temp. range dry: -40÷80 °C
Temp. range wet: -40÷65 °C
Pin material: PBT white

LFB - Code 23
Low friction Acetal

Max w. load:
Straight: 30000 N/m
Curve 2000 N
Weight: 7,5 kg/m²
Temp. range dry: -40÷80 °C
Temp. range wet: -40÷65 °C
Pin material: PBT white

PPB - Code 24
Polypropylene

Max w. load:
Straight: 19500 N/m
Curve 1300 N
Weight: 5,8 kg/m²
Temp. range dry: 4÷104 °C
Temp. range wet: 4÷104 °C
Pin material: PP blu

THE BEST CHOICE FOR FOOD CONTACT APPLICATION

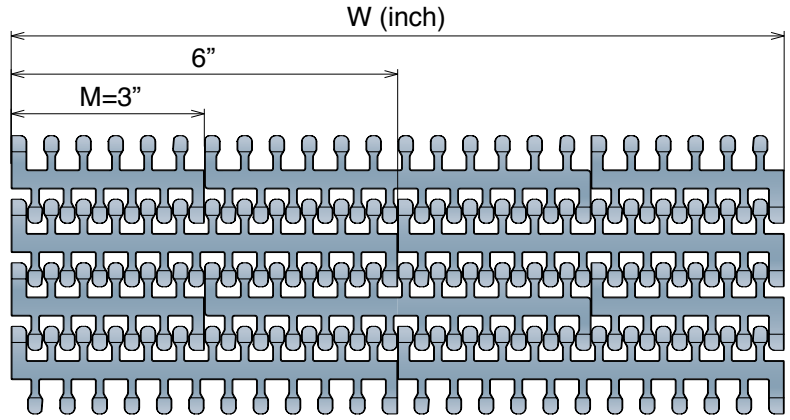

STANDARD

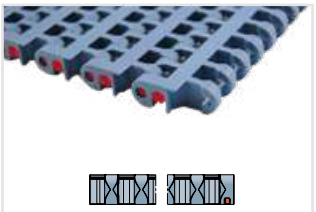

Series	Material	Width	Version	min radius
5431	*	0003	A	145
5431	*	0006	A	290
5431	*	0009	A	435
5431	*	0012	A	580
5431	*	0015	A	725
5431	*	0018	A	890
5431	*	0021	A	1040
5431	*	0024	A	1250

TAB

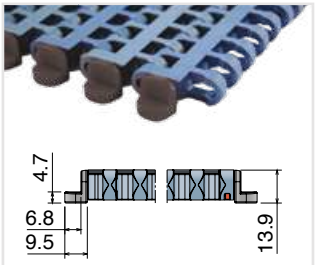

Series	Material	Width	Version	min radius
5431	*	0003	B	145
5431	*	0006	B	290
5431	*	0009	B	435
5431	*	0012	B	580
5431	*	0015	B	725
5431	*	0018	B	890
5431	*	0021	B	1040
5431	*	0024	B	1250

TAB/POSITIONER

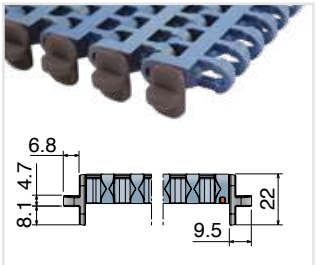

Series	Material	Width	Version	min radius
5431	*	0003	C	145
5431	*	0006	C	290
5431	*	0009	C	435
5431	*	0012	C	580
5431	*	0015	C	725
5431	*	0018	C	890
5431	*	0021	C	1040
5431	*	0024	C	1250

556 GT Open Surface 25% Tappeto Modulare Curvilineo Serie 556 GT, H=12,7 M=3"

Side Flex Modular Belt Series 556 GT, H=12,7 M=3" / Kurvengängige Mattenkette Serie 556 GT, H=12,7 M=3"

CODE STRUCTURE GUIDE (Example)

Backflex radius min.: 25 mm

5433	01	0009	A
Series	*Material	Width	Version

pg. 327 pg. 651>661

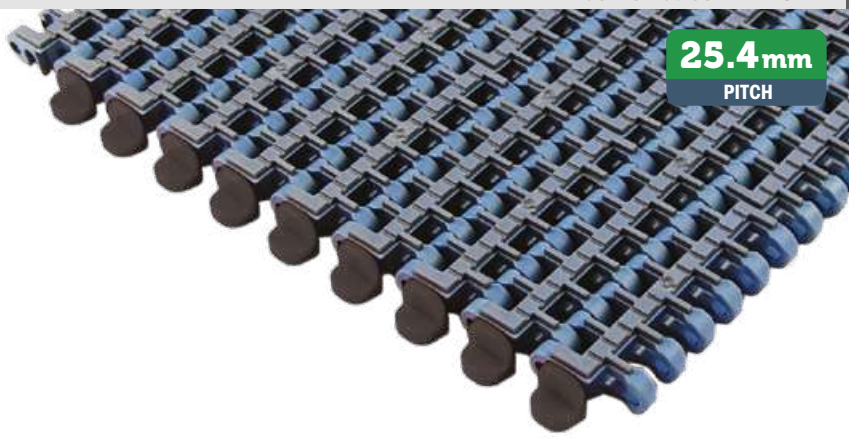

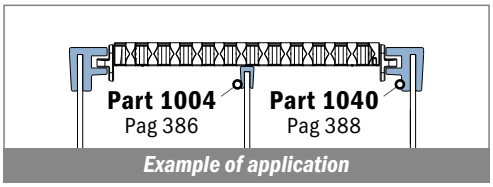

Example of application

*Material

LFA - Code 01
Low friction Acetal

Max w. load:
Straight: 30000 N/m
Curve 2000 N
Weight: 7,7 kg/m²
Temp. range dry: -40÷80 °C
Temp. range wet: -40÷65 °C
Pin material: PBT white
Top rubber: 50 ShA-Dark grey

LFB - Code 23
Low friction Acetal

Max w. load:
Straight: 30000 N/m
Curve 2000 N
Weight: 7,7 kg/m²
Temp. range dry: -40÷80 °C
Temp. range wet: -40÷65 °C
Pin material: PBT white
Top rubber: 50 ShA-Black

PPB - Code 24
Polypropylene

Max w. load:
Straight: 19500 N/m
Curve 1300 N
Weight: 5,8 kg/m²
Temp. range dry: 4÷104 °C
Temp. range wet: 4÷104 °C
Pin material: PP blu
Top rubber: 50 ShA-Black

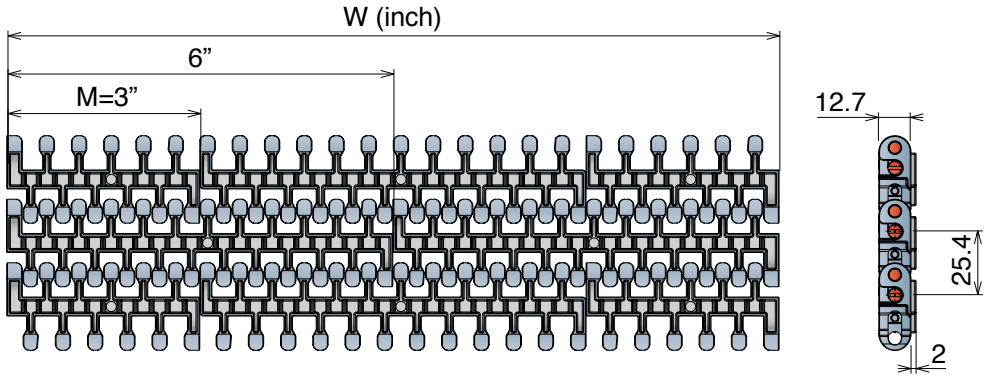

STANDARD

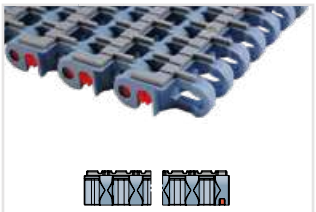

Series	Material	Width	Version	min radius
5433	*	0003	A	145
5433	*	0006	A	290
5433	*	0009	A	435
5433	*	0012	A	580
5433	*	0015	A	725
5433	*	0018	A	890
5433	*	0021	A	1040
5433	*	0024	A	1250

TAB

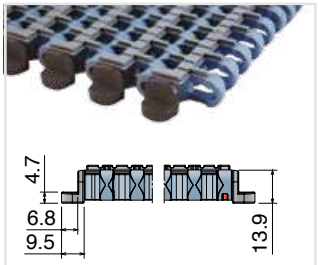

Series	Material	Width	Version	min radius
5433	*	0003	B	145
5433	*	0006	B	290
5433	*	0009	B	435
5433	*	0012	B	580
5433	*	0015	B	725
5433	*	0018	B	890
5433	*	0021	B	1040
5433	*	0024	B	1250

TAB/POSITIONER

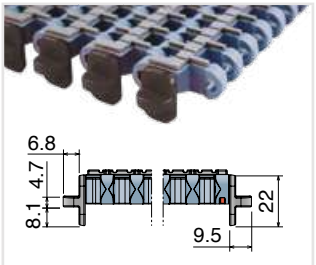

Series	Material	Width	Version	min radius
5433	*	0003	C	145
5433	*	0006	C	290
5433	*	0009	C	435
5433	*	0012	C	580
5433	*	0015	C	725
5433	*	0018	C	890
5433	*	0021	C	1040
5433	*	0024	C	1250

Oadby Core product range
Oadby Available from stock in Leicester
Easy Available from stock in Italy
Standard Produced to order in Italy

Movex®

600

Pitch 31,75 mm
H= 12,7 mm

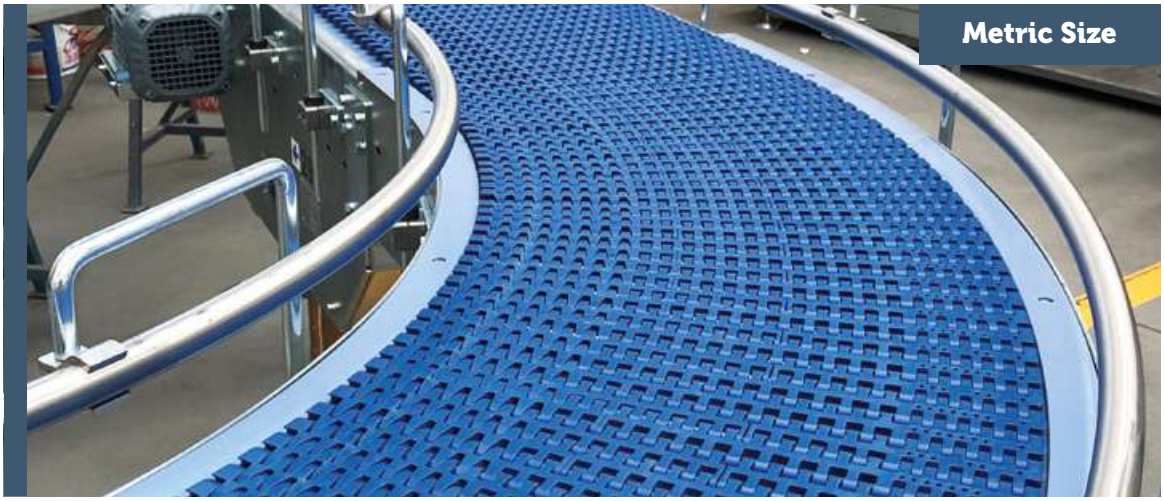

Metric Size

- 600 *Standard*
- 600 *Heavy duty*
- 600 *Heavy duty with Bearings*
- 600 *Small radius*
- 600 *Heavy duty/Small radius*
- 600 *Heavy duty/Small radius with Bearings*
- 600 *with pusher*
- 1047 *Heavy duty guide*

Movex®

600 Standard

Tappeto Modulare Curvilineo Serie 600, H=12,7 M=85

Side Flex Modular Belt Series 600, H=12,7 M=85 / Kurvengängige Mattenkette Serie 600, H=12,7 M=85

CODE STRUCTURE GUIDE (Example)

Backflex radius min.: 25 mm

5421	01	0255	A
Series	*Material	Width	Version

pg. 330 | pg. 170/171 | pg. 651>661

29.5% OPEN SURFACE

31.75 mm PITCH

***Material**

LFA - Code 01
Low friction Acetal

Max w. load:
Straight 30000 N/m
Curve 2500 N
Weight: 7,7 kg/m²
Temp. range dry: -40÷80 °C
Temp. range wet: -40÷65 °C
Pin material: PBT white

LFB - Code 23
Low friction Acetal

Max w. load:
Straight 30000 N/m
Curve 2500 N
Weight: 7,7 kg/m²
Temp. range dry: -40÷80 °C
Temp. range wet: -40÷65 °C
Pin material: PBT white

Internal Min Radius
2 times the width

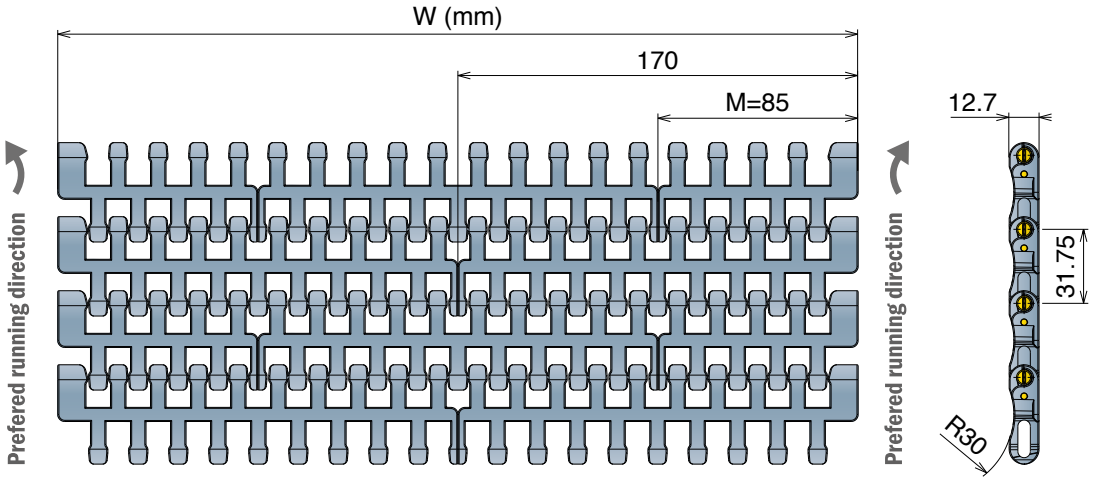

STANDARD

Series	Material	Width	Version	min radius
5421	*	0255	A	510
5421	*	0340	A	680
5421	*	0425	A	850
5421	*	0510	A	1020
5421	*	0595	A	1190
5421	*	0680	A	1360
5421	*	0765	A	1530
5421	*	0850	A	1700

TAB

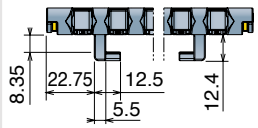

Series	Material	Width	Version	min radius
5421	*	0255	B	510
5421	*	0340	B	680
5421	*	0425	B	850
5421	*	0510	B	1020
5421	*	0595	B	1190
5421	*	0680	B	1360
5421	*	0765	B	1530
5421	*	0850	B	1700

REVERSE TAB

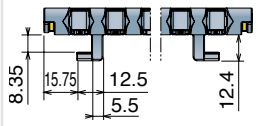

Series	Material	Width	Version	min radius
5421	*	0255	C	510
5421	*	0340	C	680
5421	*	0425	C	850
5421	*	0510	C	1020
5421	*	0595	C	1190
5421	*	0680	C	1360
5421	*	0765	C	1530
5421	*	0850	C	1700

TAB REVERSE TAB

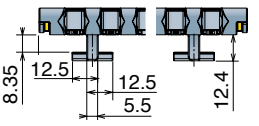

Series	Material	Width	Version	min radius
5421	*	0255	D	510
5421	*	0340	D	680
5421	*	0425	D	850
5421	*	0510	D	1020
5421	*	0595	D	1190
5421	*	0680	D	1360
5421	*	0765	D	1530
5421	*	0850	D	1700

Oadby Core product range
Oadby Available from stock in Leicester
Easy Available from stock in Italy
Standard Produced to order in Italy

600 Heavy duty Tappeto Modulare Curvilineo Serie 600, H=12,7 M=85

Side Flex Modular Belt Series 600, H=12,7 M=85 / Kurvengängige Mattenkette Serie 600, H=12,7 M=85

CODE STRUCTURE GUIDE (Example) — **Backflex radius min.:** 25 mm

5422	01	0255	E
Series	*Material	Width	Version

27.5% OPEN SURFACE

31.75 mm PITCH

pg. 330 pg. 172 pg. 651>661

RANGE EXTENSION

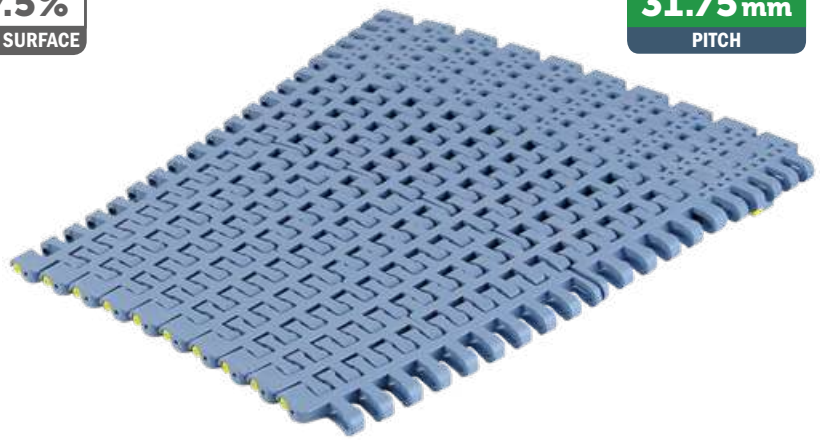

Internal Min Radius
2 times the width

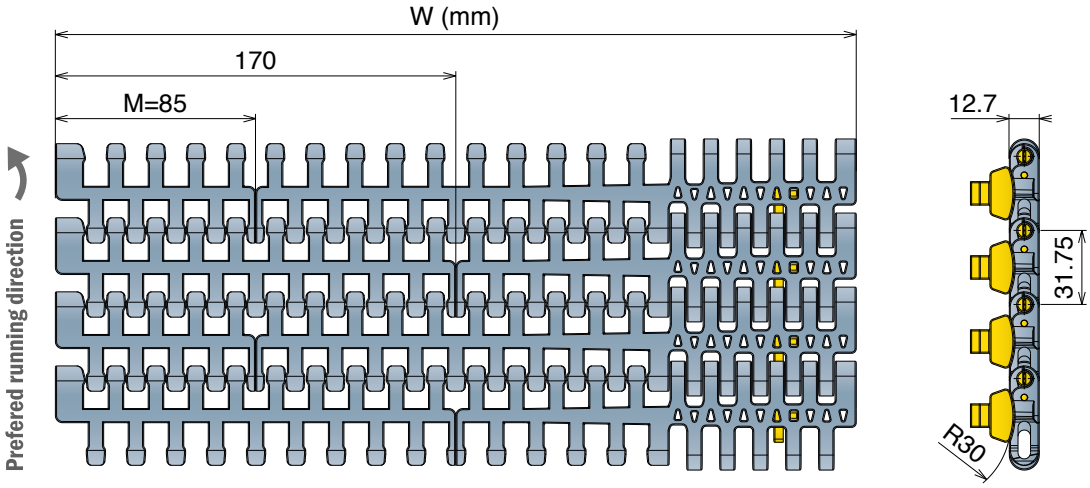

***Material**

LFA - Code 01
Low friction Acetal

Max w. load:	
Straight	30000 N/m
Curve	3500 N
Weight:	8,3 kg/m²
Temp. range dry:	-40÷80 °C
Temp. range wet:	-40÷65 °C
Pin material:	PBT white

LFB - Code 23
Low friction Acetal

Max w. load:	
Straight	30000 N/m
Curve	3500 N
Weight:	8,3 kg/m²
Temp. range dry:	-40÷80 °C
Temp. range wet:	-40÷65 °C
Pin material:	PBT white

STANDARD

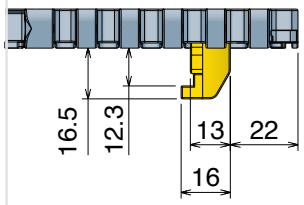

Series	Material	Width	Version	min radius
5422	*	0255	E	510
5422	*	0340	E	680
5422	*	0425	E	850
5422	*	0510	E	1020
5422	*	0595	E	1190
5422	*	0680	E	1360
5422	*	0765	E	1530
5422	*	0850	E	1700

TAB DKM Material

Metric Size

600 Heavy duty with Bearings

Tappeto Modulare Curvilineo Serie 600, H=12,7 M=85

Side Flex Modular Belt Series 600, H=12,7 M=85 / Kurvengängige Mattenkette Serie 600, H=12,7 M=85

CODE STRUCTURE GUIDE (Example)

Backflex radius min.: 25 mm

5422	01	0340	F
Series	*Material	Width	Version

pg. 330 | pg. 173 | pg. 651>661

RANGE EXTENSION

27.5% OPEN SURFACE

31.75 mm PITCH

***Material**

LFA - Code 01
Low friction Acetal

Max w. load:	
Straight	30000 N/m
Curve	3500 N
Weight:	9,0 kg/m²
Temp. range dry:	-40÷80 °C
Temp. range wet:	-40÷65 °C
Pin material:	PBT white

LFB - Code 23
Low friction Acetal

Max w. load:	
Straight	30000 N/m
Curve	3500 N
Weight:	9,0 kg/m²
Temp. range dry:	-40÷80 °C
Temp. range wet:	-40÷65 °C
Pin material:	PBT white

Internal Min Radius
2 times the width

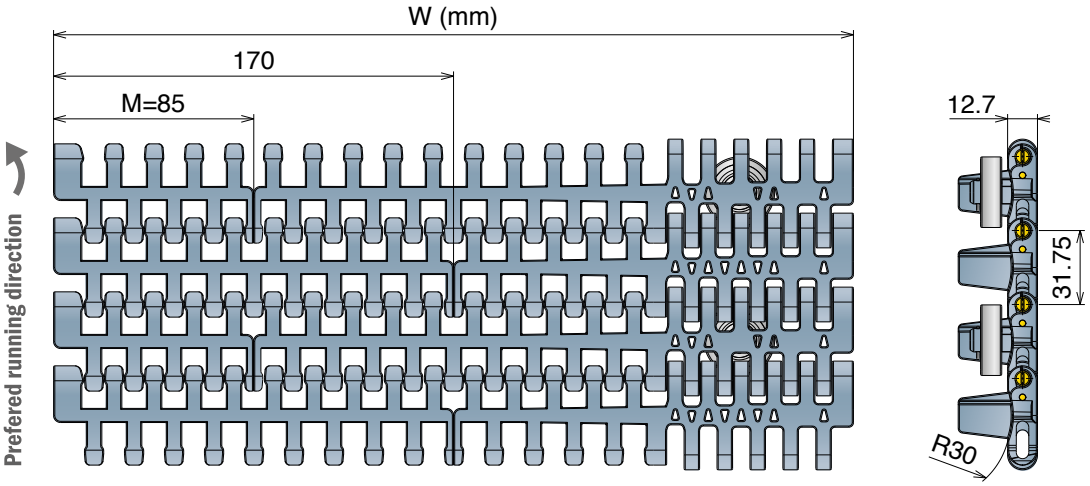

STANDARD

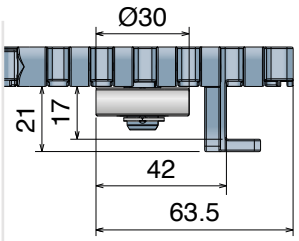

Series	Material	Width	Version	min radius
5422	*	0255	F	510
5422	*	0340	F	680
5422	*	0425	F	850
5422	*	0510	F	1020
5422	*	0595	F	1190
5422	*	0680	F	1360
5422	*	0765	F	1530
5422	*	0850	F	1700

Bearing Zoom

Oadby Core product range
Oadby Available from stock in Leicester | Easy Available from stock in Italy | Standard Produced to order in Italy

Movex

600 *Small radius*

Tappeto Modulare Curvilineo Serie 600, H=12,7 M=85

Side Flex Modular Belt Series 600, H=12,7 M=85 / Kurvengängige Mattenkette Serie 600, H=12,7 M=85

CODE STRUCTURE GUIDE (Example) — **Backflex radius min.:** 25 mm

5423	01	0340	A
Series	*Material	Width	Version

29.5% OPEN SURFACE

31.75 mm PITCH

pg. 330-331 | pg. 170/171 | pg. 651>661

*Material

LFA - Code 01
Low friction Acetal

Max w. load:	
Straight	30000 N/m
Curve	2500 N
Weight:	7,0 kg/m²
Temp. range dry:	-40÷80 °C
Temp. range wet:	-40÷65 °C
Pin material:	PBT white

LFB - Code 23
Low friction Acetal

Max w. load:	
Straight	30000 N/m
Curve	2500 N
Weight:	7,0 kg/m²
Temp. range dry:	-40÷80 °C
Temp. range wet:	-40÷65 °C
Pin material:	PBT white

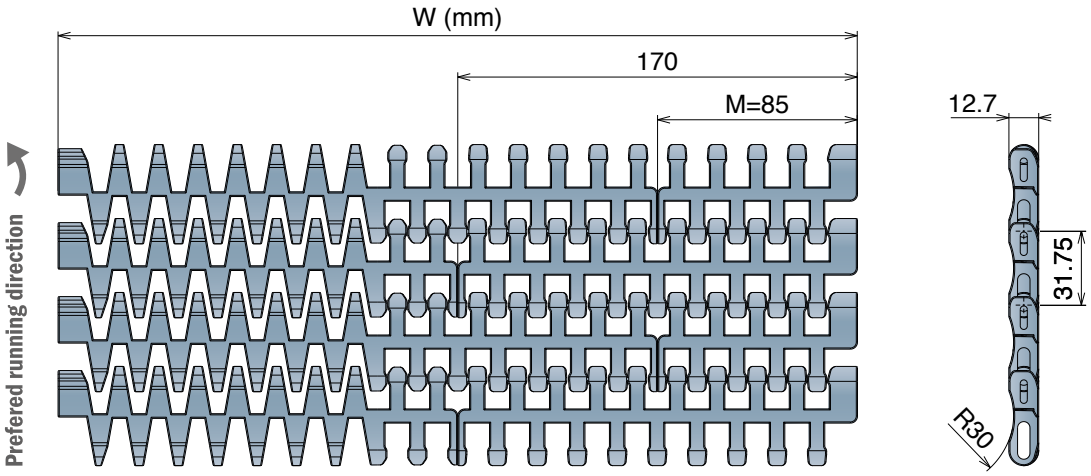

STANDARD

Series	Material	Width	Version	min radius
5423	*	0340	A	400
5423	*	0425	A	500
5423	*	0510	A	600
5423	*	0595	A	720
5423	*	0680	A	880
5423	*	0765	A	1040
5423	*	0850	A	1200

TAB

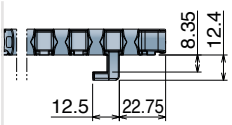

Series	Material	Width	Version	min radius
5423	*	0340	B	400
5423	*	0425	B	500
5423	*	0510	B	600
5423	*	0595	B	720
5423	*	0680	B	880
5423	*	0765	B	1040
5423	*	0850	B	1200

REVERSE TAB

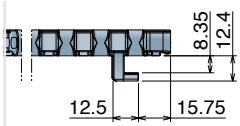

Series	Material	Width	Version	min radius
5423	*	0340	C	400
5423	*	0425	C	500
5423	*	0510	C	600
5423	*	0595	C	720
5423	*	0680	C	880
5423	*	0765	C	1040
5423	*	0850	C	1200

TAB REVERSE TAB

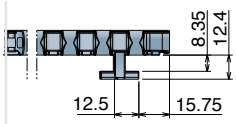

Series	Material	Width	Version	min radius
5423	*	0340	D	400
5423	*	0425	D	500
5423	*	0510	D	600
5423	*	0595	D	720
5423	*	0680	D	880
5423	*	0765	D	1040
5423	*	0850	D	1200

Metric Size

600 Heavy duty/Small radius

Tappeto Modulare Curvilineo Serie 600, H=12,7 M=170

Side Flex Modular Belt Series 600, H=12,7 M=170 / Kurvengängige Mattenkette Serie 600, H=12,7 M=170

CODE STRUCTURE GUIDE (Example)

Backflex radius min.: 25 mm

5424	01	0425	E
Series	*Material	Width	Version

pg. 330-331 pg. 172 pg. 651>661

RANGE EXTENSION

27.5% OPEN SURFACE

31.75 mm PITCH

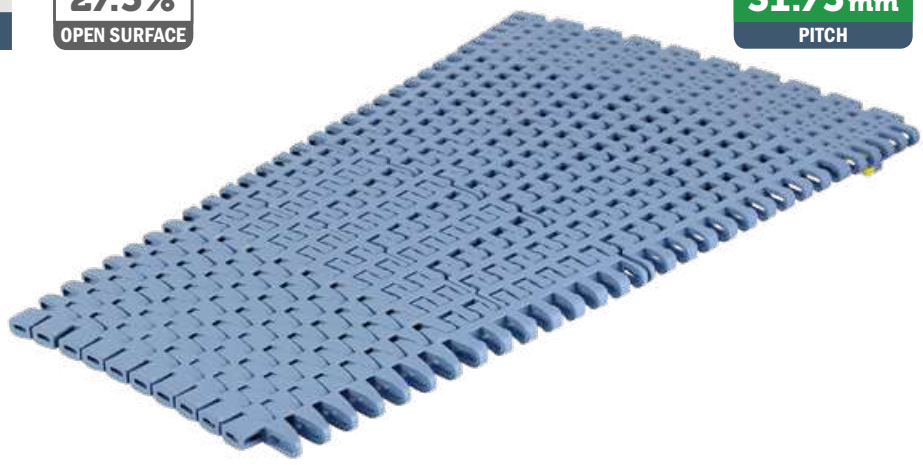

***Material**

LFA - Code 01
Low friction Acetal

Max w. load:	
Straight	30000 N/m
Curve	3500 N
Weight:	7,5 kg/m²
Temp. range dry:	-40÷80 °C
Temp. range wet:	-40÷65 °C
Pin material:	PBT white

LFB - Code 23
Low friction Acetal

Max w. load:	
Straight	30000 N/m
Curve	3500 N
Weight:	7,5 kg/m²
Temp. range dry:	-40÷80 °C
Temp. range wet:	-40÷65 °C
Pin material:	PBT white

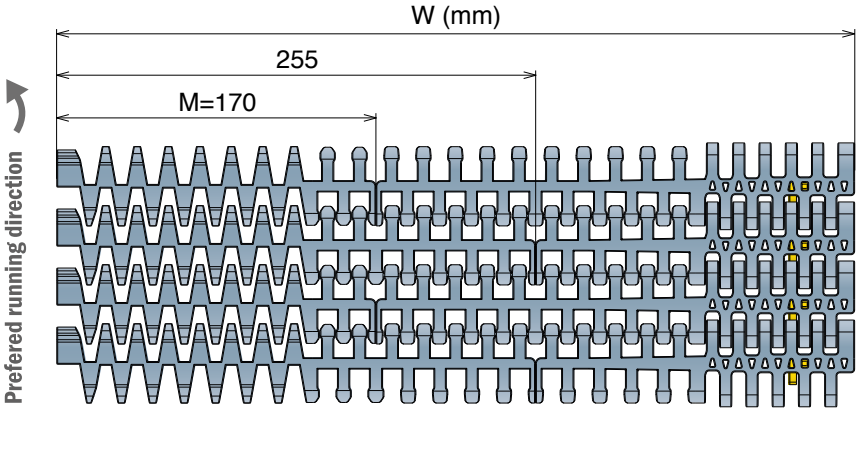

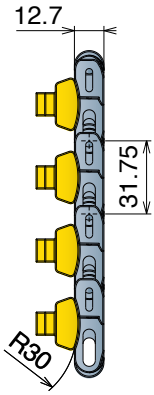

STANDARD

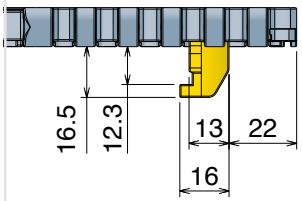

Series	Material	Width	Version	min radius
5424	*	0255	E	390
5424	*	0340	E	420
5424	*	0425	E	500
5424	*	0510	E	600
5424	*	0595	E	720
5424	*	0680	E	880
5424	*	0765	E	1040
5424	*	0850	E	1200

TAB DKM Material

Oadby Core product range
Oadby Available from stock in Leicester
Easy Available from stock in Italy
Standard Produced to order in Italy

Movex

600 Heavy duty/Small radius with Bearings

Tappeto Curvilineo Serie 600, H=12,7 M=170

Side Flex Modular Belt Series 600, H=12,7 M=170 / Kurvengängige Mattenkette Serie 600, H=12,7 M=170

CODE STRUCTURE GUIDE (Example) — **Backflex radius min.:** 25 mm

5424	01	0425	F
Series	*Material	Width	Version

27.5% OPEN SURFACE

31.75 mm PITCH

pg. 330-331 | pg. 173 | pg. 651>661

RANGE EXTENSION

Metric Size

*Material

LFA - Code 01
Low friction Acetal

Max w. load:	
Straight	30000 N/m
Curve	3500 N
Weight:	8,5 kg/m²
Temp. range dry:	-40÷80 °C
Temp. range wet:	-40÷65 °C
Pin material:	PBT white

LFB - Code 23
Low friction Acetal

Max w. load:	
Straight	30000 N/m
Curve	3500 N
Weight:	8,5 kg/m²
Temp. range dry:	-40÷80 °C
Temp. range wet:	-40÷65 °C
Pin material:	PBT white

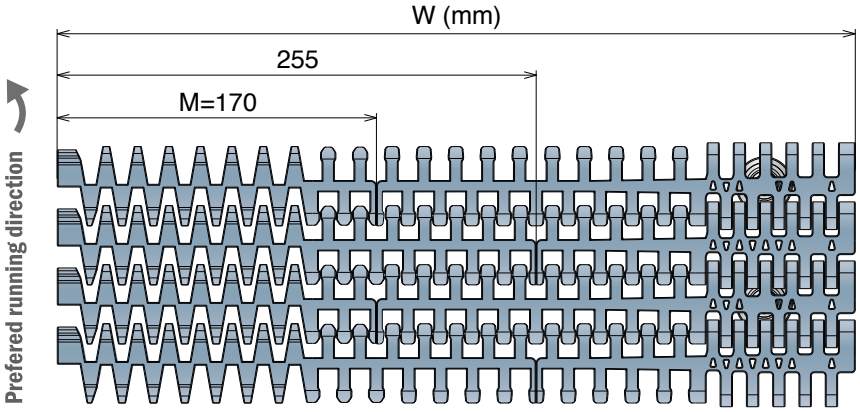

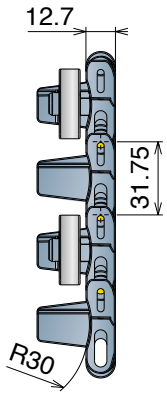

STANDARD

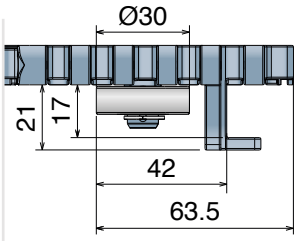

Series	Material	Width	Version	min radius
5424	*	0255	F	390
5424	*	0340	F	420
5424	*	0425	F	500
5424	*	0510	F	600
5424	*	0595	F	720
5424	*	0680	F	880
5424	*	0765	F	1040
5424	*	0850	F	1200

Bearing Zoom

600 *with pusher*

Tappeto Modulare Curvilineo Serie 600, H=12,7 M=85
Side Flex Modular Belt Series 600, H=12,7 M=85 / Kurvengängige Mattenkette Serie 600, H=12,7 M=85

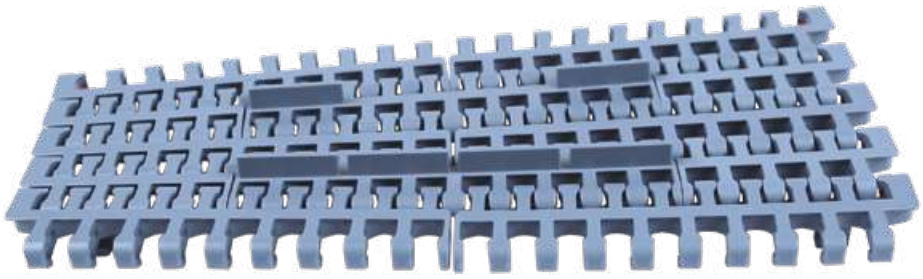

31.75 mm
PITCH

pg. 330 | pg. 170/171 | pg. 651>661

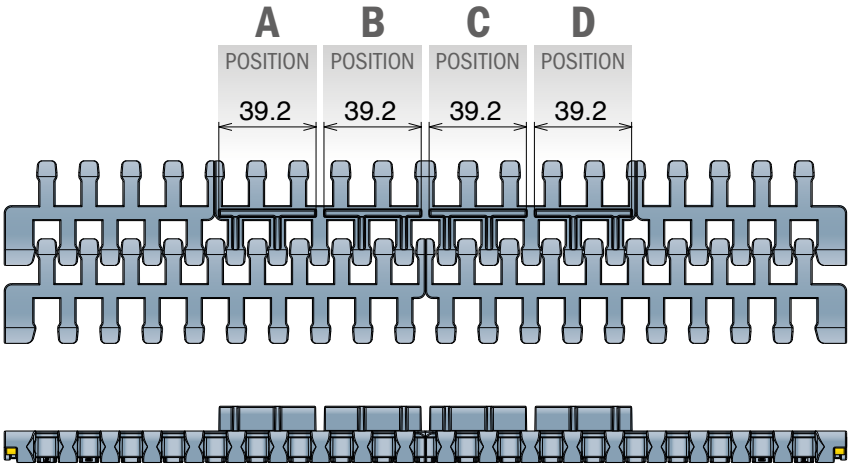

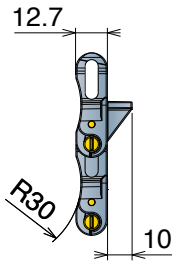

The pusher is applicable only for the center module, and there are available up to a maximum of 4 positions (**A**-**B**-**C**-**D**) or with different types of combinations (example **A**-**B**-**D** / **A**-**C** / **B**-**C**-**D**).

Consult our engineering department for details.

1047

Guida tappeto
Belt side guide / Seitenführung für Mattenkette

Part	Article-Nr.	Material	Width
1047	104700BC	BluLub	3 m

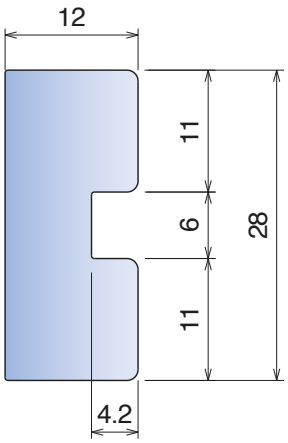

Material: Polyethylene UHMW-PE with moleculardensity 9,200,000 g/mo.

BluLub *new material with reduced coefficient of friction and higher wear resistence. BluLub complies with the code of Federal Regulations of FDA.*
Linear expansion coefficient: 1.1x10⁻⁴ °F⁻¹ (2x10⁻⁴ °C⁻¹)
Operating temperature: -40 to 176°F (-40 to +80°C)

Oadby Core product range
Oadby Available from stock in Leicester | Easy Available from stock in Italy | Standard Produced to order in Italy

500

Pitch 50,8 mm
H= 24 mm

Imperial Size

500 RR
500 RR *with positioner*
389 *Combs*

Movex®

Imperial Size

500 RR

Tappeto Modulare 500 RR
Raised Rib Belt Series 500 RR / Modulare Mattenkette 500 RR

CODE STRUCTURE GUIDE (Example)

1348	02	0060
Series	*Material	Width

pg. 333-334 pg. 651>661

50.8mm PITCH

***Material**

PP - Code 02 *Polypropylene*		PPX - Code 11 *Polypropylene*	
Max w. load:	30000 N/m	**Max w. load:**	30000 N/m
Weight:	10,65 kg/m²	**Weight:**	10,65 kg/m²
Temp. range:	4÷104 °C	**Temp. range:**	4÷104 °C
Pin material:	PP grey	**Pin material:**	PP grey
		IMPROVED HEAT STABILITY	

Series	Material	Width
1348	*	0060
1348	*	0063
1348	*	0066
1348	*	0069
1348	*	0072
1348	*	0075
1348	*	0078
1348	*	0081
1348	*	0084
1348	*	0087
1348	*	0090
1348	*	0093
1348	*	0096
1348	*	0099
1348	*	0102
1348	*	0105
1348	*	0108
1348	*	0111
1348	*	0114
1348	*	0117
1348	*	0120

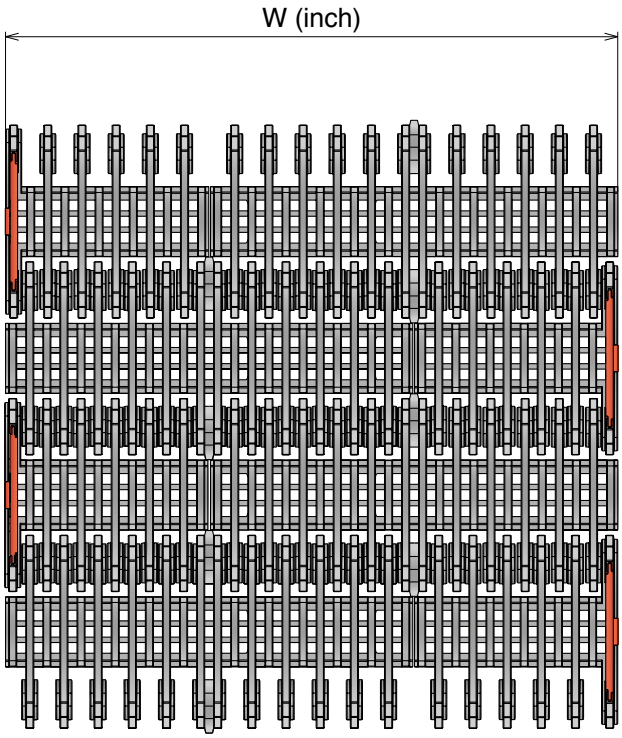

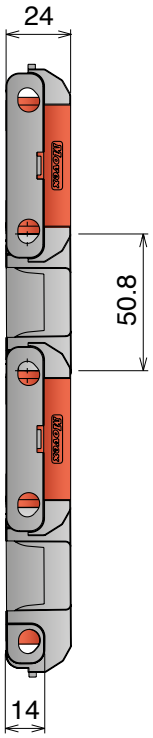

Oadby Core product range
Oadby Available from stock in Leicester
Easy Available from stock in Italy
Standard Produced to order in Italy

Movex®

NEW 500 RR *with positioner* Tappeto Modulare 500 RR

Raised Rib Belt Series 500 RR / Modulare Mattenkette 500 RR

CODE STRUCTURE GUIDE (Example)

1348	02	0060	C
Series	*Material	Width	Version

pg. 333-334 pg. 651>661

50.8mm PITCH

***Material**

PP - Code 02 *Polypropylene*		PPX - Code 11 *Polypropylene*	
Max w. load:	30000 N/m	**Max w. load:**	30000 N/m
Weight:	10,65 kg/m²	**Weight:**	10,65 kg/m²
Temp. range:	4÷104 °C	**Temp. range:**	4÷104 °C
Pin material:	PP grey	**Pin material:**	PP grey
		IMPROVED HEAT STABILITY	

Series	Material	Width	Version
1348	*	0060	C
1348	*	0063	C
1348	*	0066	C
1348	*	0069	C
1348	*	0072	C
1348	*	0075	C
1348	*	0078	C
1348	*	0081	C
1348	*	0084	C
1348	*	0087	C
1348	*	0090	C
1348	*	0093	C
1348	*	0096	C
1348	*	0099	C
1348	*	0102	C
1348	*	0105	C
1348	*	0108	C
1348	*	0111	C
1348	*	0114	C
1348	*	0117	C
1348	*	0120	C

Bottom view

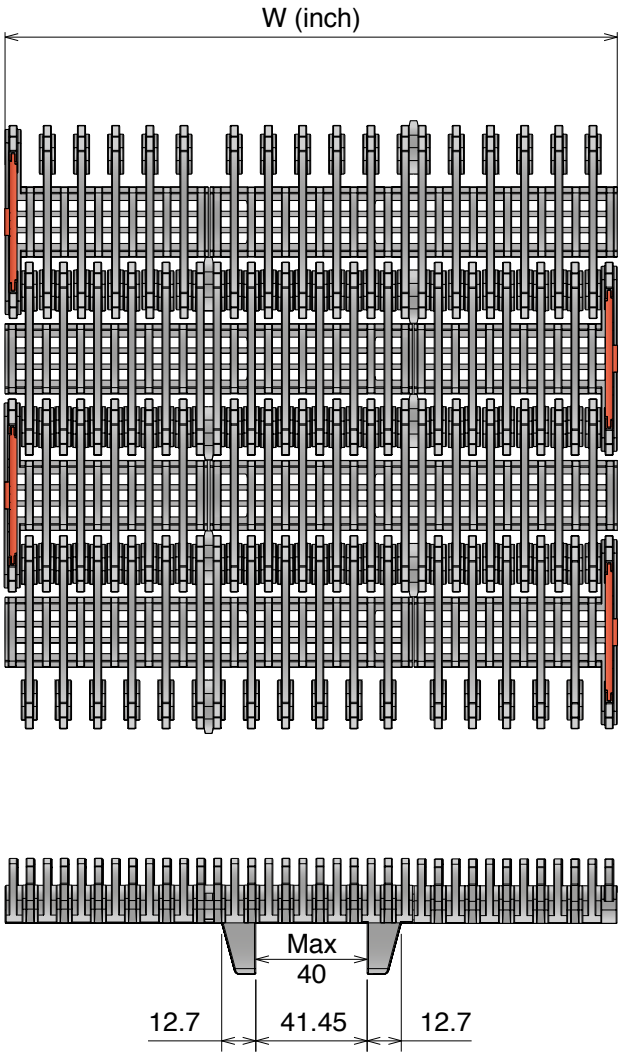

For belt widths multiple of 3", positioners are centered (e.g. 63,69,75,81 inches).
For belt widths multiple of 6", positioners are 1,5" offset (e.g. 60,66,72,78 inches).

Materiale / *Material / Materialien:*
Resina acetalica/*Acetal resin/Azetal*
Vite: Acciaio inox/*Screw: Stainless steel/Schraube: Edelstahl*

389 Pettine
Combs / Fingerplatte

Two screw included

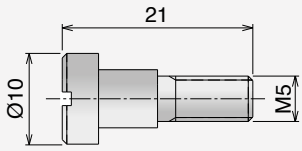

For assembly instructions refers to Movex engineering manual available on our website.

Type A

Part	Article-Nr.
389	38901

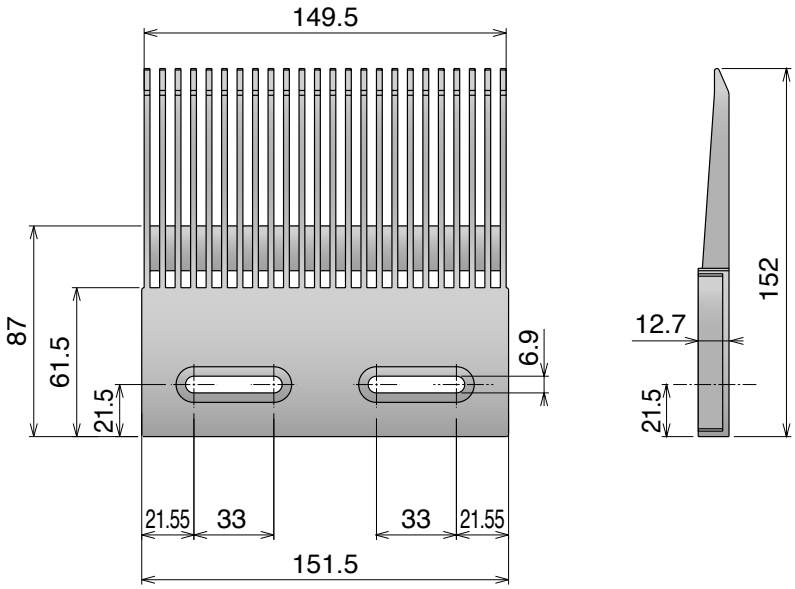

Type B

Part	Article-Nr.
389	38902

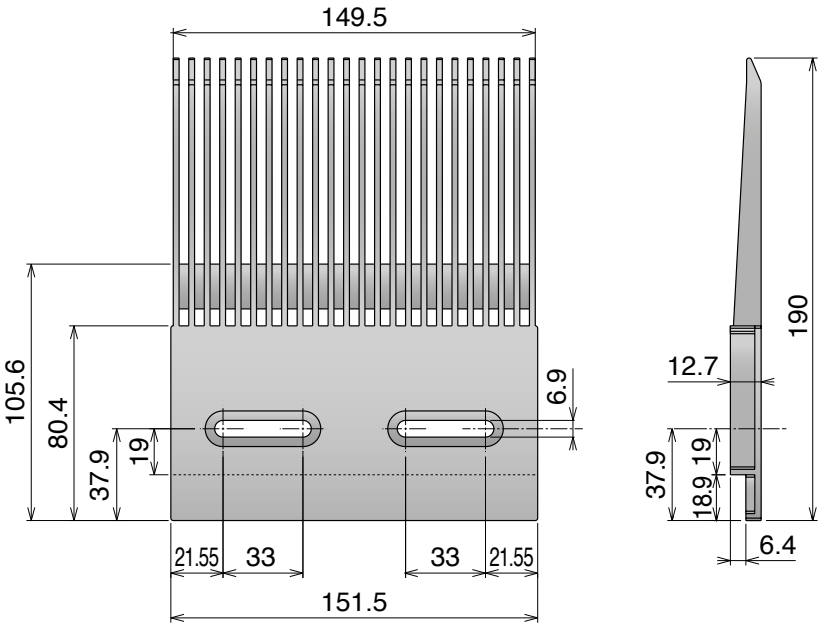

Core product range
Available from stock in Leicester
Easy Available from stock in Italy
Standard Produced to order in Italy

Movex

ZERO 520 CONTACT

SIDE FLEX MODULAR BELT

ZERO CONTACT
ZERO CONTACT PRO

Movex®

ZERO CONTACT

Tappeto Modulare Curvilineo Zero Contact ™, H=10,1 M=200

Side Flex Modular Belt Zero Contact ™, H=10,1 M=200 / Kurvengängige Mattenkette Zero Contact ™, H=10,1 M=200

pg. 332 | Zero contact Curve pg. 286/292 | pg. 651÷661

SAMPLE BOX
Art.-Nr. 5999999925A

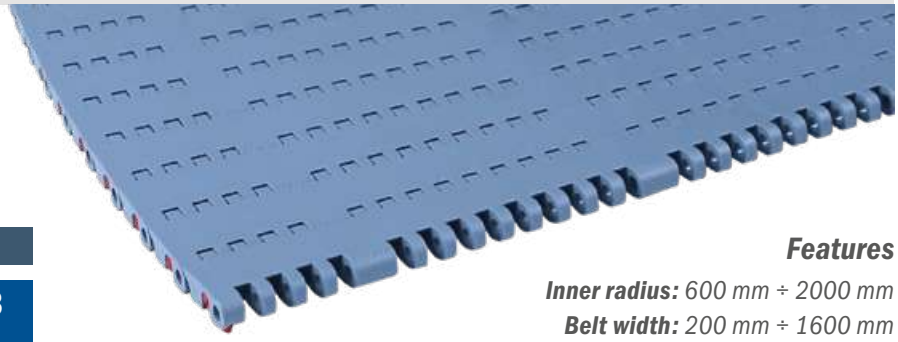

Material

LFA - Code 01 *Low friction Acetal*		LFB - Code 23 *Low friction Acetal*	
Max w. load:	13500 N/m	**Max w. load:**	13500 N/m
Weight:	9,25 kg/m²	**Weight:**	9,25 kg/m²
Temp. range dry:	-40÷80 °C	**Temp. range dry:**	-40÷80 °C
Temp. range wet:	-40÷65 °C	**Temp. range wet:**	-40÷65 °C
Pin material:	PBT white	**Pin material:**	PBT white

Features

Inner radius: *600 mm ÷ 2000 mm*
Belt width: *200 mm ÷ 1600 mm*
Angle: *90° and 180° (different on request)*
Row to row angle: *1,33°*
Pin material: *Ø4,7 mm, PBT White*
Open Area: *0%*

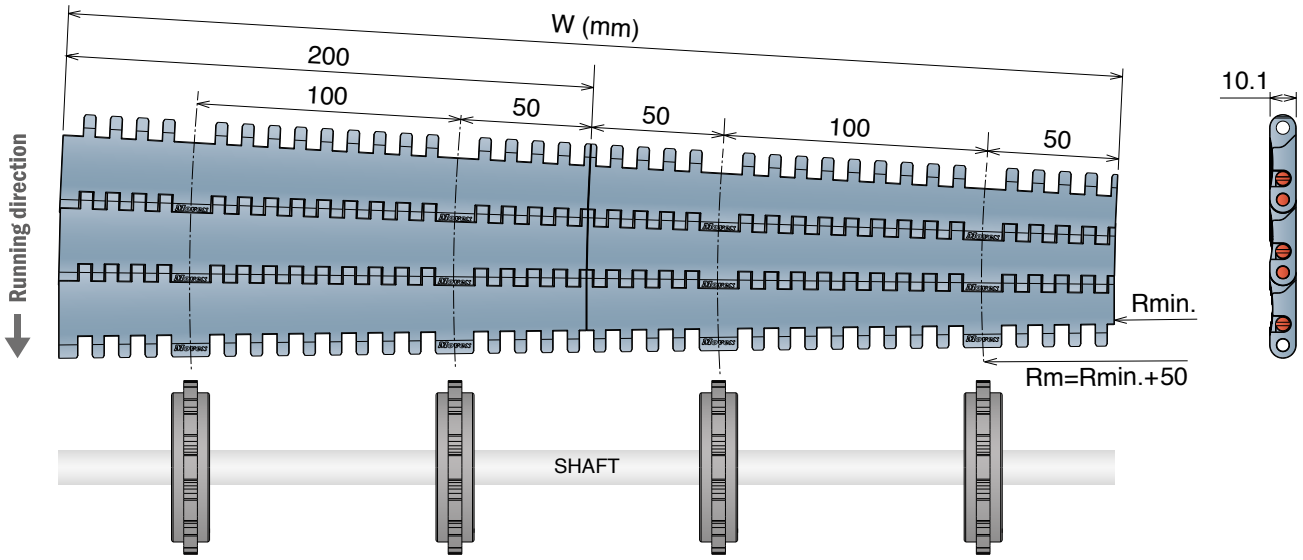

Movex® **Zero Contact™** modular fixed radius curve belt is the best choice for all type of transportation, for beverage, food and logistic industries, thanks to its versatility.

It offers high performances, reducing the coefficient of friction between product and running belt surface and improves the efficiency of the line, by minimizing dowtimes.

A wide range of radii and widths helps finding the right solution for every product dimension and transportation condition, from light packages to heavier ones.

Installation and maintenance have never been so easy, so far.

The belt is compliant to:
EC 1935/2004, Regulation EU 10/2011
FDA 21 CFR 177.2470

Low friction

Minimized maintenance

Easy pin removal

Oadby Core product range
Oadby Available from stock in Leicester
Easy Available from stock in Italy
Standard Produced to order in Italy
Movex

ZERO520CONTACT
SIDE FLEX MODULAR BELT

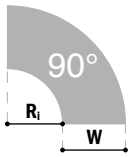

Side Flex Modular Belt Zero Contact ™ 90° | Length of the belt 150 Modules

Belt Width	Ri 600	Ri 800	Ri 1000	Ri 1200	Ri 1400	Ri 1600	Ri 1800	Ri 2000	Material
200	5451010201A	5451010202A	5451010203A	5451010204A	5451010205A	5451010206A	5451010207A	5451010208A	LFA
400	5451010401A	5451010402A	5451010403A	5451010404A	5451010405A	5451010406A	5451010407A	-	
600	5451010601A	5451010602A	5451010603A	5451010604A	5451010605A	5451010606A	-	-	
800	5451010801A	5451010802A	5451010803A	5451010804A	5451010805A	-	-	-	
1000	5451011001A	5451011002A	5451011003A	5451011004A	-	-	-	-	
1200	5451011201A	5451011202A	5451011203A	-	-	-	-	-	
1400	5451011401A	5451011402A	-	-	-	-	-	-	
1600	5451011601A	-	-	-	-	-	-	-	

Side Flex Modular Belt Zero Contact ™ 90° | Length of the belt 150 Modules

Belt Width	Ri 600	Ri 800	Ri 1000	Ri 1200	Ri 1400	Ri 1600	Ri 1800	Ri 2000	Material
200	5451230201A	5451230202A	5451230203A	5451230204A	5451230205A	5451230206A	5451230207A	5451230208A	LFB
400	5451230401A	5451230402A	5451230403A	5451230404A	5451230405A	5451230406A	5451230407A	-	
600	5451230601A	5451230602A	5451230603A	5451230604A	5451230605A	5451230606A	-	-	
800	5451230801A	5451230802A	5451230803A	5451230804A	5451230805A	-	-	-	
1000	5451231001A	5451231002A	5451231003A	5451231004A	-	-	-	-	
1200	5451231201A	5451231202A	5451231203A	-	-	-	-	-	
1400	5451231401A	5451231402A	-	-	-	-	-	-	
1600	5451231601A	-	-	-	-	-	-	-	

ZERO520CONTACT
SIDE FLEX MODULAR BELT

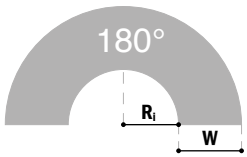

Side Flex Modular Belt Zero Contact ™ 180° | Length of the belt 285 Modules

Belt Width	Ri 600	Ri 800	Ri 1000	Ri 1200	Ri 1400	Ri 1600	Ri 1800	Ri 2000	Material
200	5452010201A	5452010202A	5452010203A	5452010204A	5452010205A	5452010206A	5452010207A	5452010208A	LFA
400	5452010401A	5452010402A	5452010403A	5452010404A	5452010405A	5452010406A	5452010407A	-	
600	5452010601A	5452010602A	5452010603A	5452010604A	5452010605A	5452010606A	-	-	
800	5452010801A	5452010802A	5452010803A	5452010804A	5452010805A	-	-	-	
1000	5452011001A	5452011002A	5452011003A	5452011004A	-	-	-	-	
1200	5452011201A	5452011202A	5452011203A	-	-	-	-	-	
1400	5452011401A	5452011402A	-	-	-	-	-	-	
1600	5452011601A	-	-	-	-	-	-	-	

Side Flex Modular Belt Zero Contact ™ 180° | Length of the belt 285 Modules

Belt Width	Ri 600	Ri 800	Ri 1000	Ri 1200	Ri 1400	Ri 1600	Ri 1800	Ri 2000	Material
200	5452230201A	5452230202A	5452230203A	5452230204A	5452230205A	5452230206A	5452230207A	5452230208A	LFB
400	5452230401A	5452230402A	5452230403A	5452230404A	5452230405A	5452230406A	5452230407A	-	
600	5452230601A	5452230602A	5452230603A	5452230604A	5452230605A	5452230606A	-	-	
800	5452230801A	5452230802A	5452230803A	5452230804A	5452230805A	-	-	-	
1000	5452231001A	5452231002A	5452231003A	5452231004A	-	-	-	-	
1200	5452231201A	5452231202A	5452231203A	-	-	-	-	-	
1400	5452231401A	5452231402A	-	-	-	-	-	-	
1600	5452231601A	-	-	-	-	-	-	-	

ZERO CONTACT PRO

Tappeto Modulare Curvilineo Zero Contact PRO, H=9

Side Flex Modular Belt Zero Contact PRO, H=9 / Kurvengängige Mattenkette Zero Contact PRO, H=9

pg. 332 | Zero contact Pro Curve pg. 288/290 | pg. 651÷661

SAMPLE BOX
Art.-Nr. 5999999925A

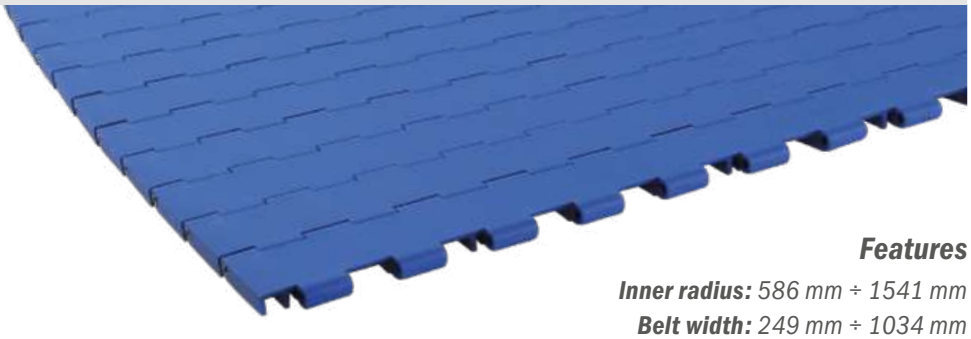

Material

PA - Code 28
Glass fiber reinforced

Max w. load:	19000 N/m
Weight:	9,25 kg/m²
Temp. range dry:	-30÷100 °C
Temp. range wet:	N.R.
Pin:	Stainless steel

Features

Inner radius: *586 mm ÷ 1541 mm*
Belt width: *249 mm ÷ 1034 mm*
Angle: *90° and 180° (different on request)*
Row to row angle: *1°*
Pin: *Ø4 mm, material 1.4301*
Open Area: *0%*

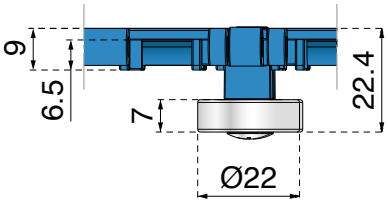

ZERO PRO CONTACT
SIDE FLEX MODULAR BELT

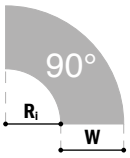

Side Flex Modular Belt Zero Contact PRO ™ 90° | Without bearings | Length of the belt 200 modules

Order code	Ri - mm	W - mm	Order code	Ri - mm	W - mm	Order code	Ri - mm	W - mm
5461280439A-M	586	439	5462281034A-M	756	1034	5464280504A-M	1116	504
5461280524A-M	586	524	5463280269A-M	1011	269	5465280419A-M	1201	419
5461280864A-M	586	864	5463280439A-M	1011	439	5466280249A-M	1286	249
5461281034A-M	586	1034	5463280524A-M	1011	524	5465280504A-M	1286	504
5462280269A-M	756	269	5463280864A-M	1011	864	5466280419A-M	1456	419
5462280439A-M	756	439	5463281034A-M	1011	1034	5466280504A-M	1541	504
5462280524A-M	756	524	5465280249A-M	1031	249			
5462280864A-M	756	864	5464280419A-M	1031	419			

Side Flex Modular Belt Zero Contact PRO ™ 90° | With bearings | Length of the belt 200 modules

Order code	Ri - mm	W - mm	Order code	Ri - mm	W - mm
5462280249A-M	1031	249	5463280249A-M	1286	249
5461280419A-M	1031	419	5462280504A-M	1286	504
5461280504A-M	1116	504	5463280419A-M	1456	419
5462280419A-M	1201	419	5463280504A-M	1541	504

Side Flex Modular Belt Zero Contact PRO ™ 90° | Two track combinations | Length of the belts 200 modules

Track 1 - Order code	Ri - mm	W - mm		Track 2 - Order code	Ri - mm	W - mm		Total width
5462280269A-M	756	269	+	5462280249A-M	1031	249	=	524
5463280269A-M	1011	269	+	5463280249A-M	1286	249	=	524
5461280439A-M	586	439	+	5461280419A-M	1031	419	=	864
5462280439A-M	756	439	+	5462280419A-M	1201	419	=	864
5463280439A-M	1011	439	+	5463280419A-M	1456	419	=	864
5461280524A-M	586	524	+	5461280504A-M	1116	504	=	1034
5462280524A-M	756	524	+	5462280504A-M	1286	504	=	1034
5463280524A-M	1011	524	+	5463280504A-M	1541	504	=	1034

The gap between the belts is 6 mm. | Track 1 belt is supplied without bearings. | Track 2 belt is supplied with bearings.

Oadby Core product range
Oadby Available from stock in Leicester | Easy Available from stock in Italy | Standard Produced to order in Italy

Movex

ZERO PRO CONTACT
SIDE FLEX MODULAR BELT

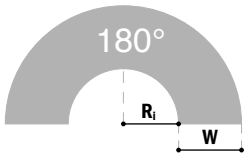

Side Flex Modular Belt Zero Contact PRO ™ 180° | Without bearings | Length of the belt 380 modules

Order code	R_i - mm	W - mm	Order code	R_i - mm	W - mm	Order code	R_i - mm	W - mm
5461280439B-M	586	439	5462281034B-M	756	1034	5464280504B-M	1116	504
5461280524B-M	586	524	5463280269B-M	1011	269	5465280419B-M	1201	419
5461280864B-M	586	864	5463280439B-M	1011	439	5466280249B-M	1286	249
5461281034B-M	586	1034	5463280524B-M	1011	524	5465280504B-M	1286	504
5462280269B-M	756	269	5463280864B-M	1011	864	5466280419B-M	1456	419
5462280439B-M	756	439	5463281034B-M	1011	1034	5466280504B-M	1541	504
5462280524B-M	756	524	5465280249B-M	1031	249			
5462280864B-M	756	864	5464280419B-M	1031	419			

Side Flex Modular Belt Zero Contact PRO ™ 180° | With bearings | Length of the belt 380 modules

Order code	R_i - mm	W - mm	Order code	R_i - mm	W - mm
5462280249B-M	1031	249	5463280249B-M	1286	249
5461280419B-M	1031	419	5462280504B-M	1286	504
5461280504B-M	1116	504	5463280419B-M	1456	419
5462280419B-M	1201	419	5463280504B-M	1541	504

Side Flex Modular Belt Zero Contact PRO ™ 180° | Two track combinations | Length of the belts 380 modules

Track 1 - Order code	R_i - mm	W - mm		Track 2 - Order code	R_i - mm	W - mm		Total width
5462280269B-M	756	269	+	5462280249B-M	1031	249	=	524
5463280269B-M	1011	269	+	5463280249B-M	1286	249	=	524
5461280439B-M	586	439	+	5461280419B-M	1031	419	=	864
5462280439B-M	756	439	+	5462280419B-M	1201	419	=	864
5463280439B-M	1011	439	+	5463280419B-M	1456	419	=	864
5461280524B-M	586	524	+	5461280504B-M	1116	504	=	1034
5462280524B-M	756	524	+	5462280504B-M	1286	504	=	1034
5463280524B-M	1011	524	+	5463280504B-M	1541	504	=	1034

The gap between the belts is 6 mm. | Track 1 belt is supplied without bearings. | Track 2 belt is supplied with bearings.

The innovative design of ***Movex®* Zero Contact™ PRO** is recommended for high speed, heavy loads and transportation of abrasive substances, like sand, salt, sugar, and many other applications.

The stainless steel pins guarantee a higher working load and due to the new pin retention with grub screw, the assembly of this belt is 100% secure.

The robust structure of **Zero Contact™ PRO** can be summarized in minimal maintenance, long life expectation and high reliability.

Zero Contact™ PRO is a versatile belt, allowing a wider range of available widths and radii. Find out also our "two-tracks" version.

Extreme speed

Heavy duty

High abrasion resistance

260/261

Pitch 25,4 mm
H= 21 mm / 25 mm / 28,7 mm

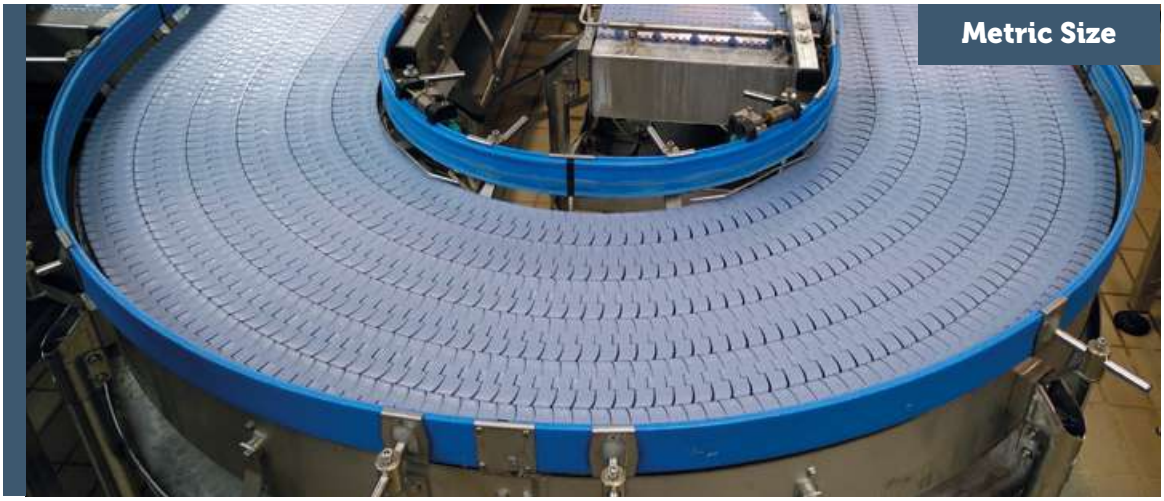

260 M FT
260 M FG
260 TAB

261 M FT
261 TAB

260 M FT

Catena curvilinea
Sideflexing belt/chain / Kurvengängige Mattenkette

MAGNETIC SYSTEM

Delivery: Easy | Standard

Pins: Ferritic SS | **Backflex radius min.:** 130 mm

25.4mm PITCH

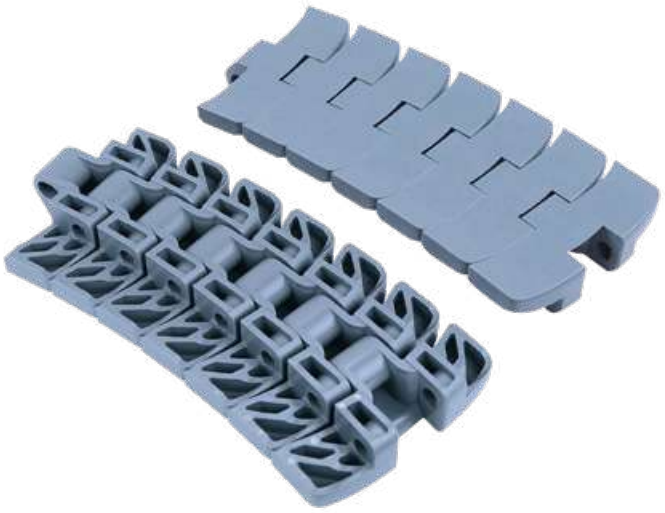

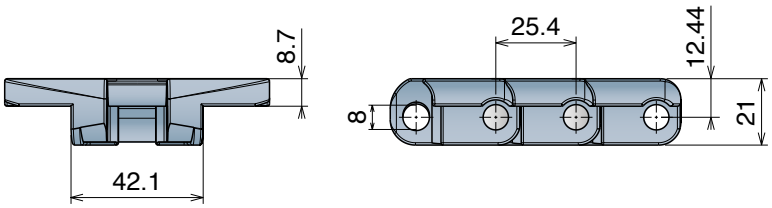

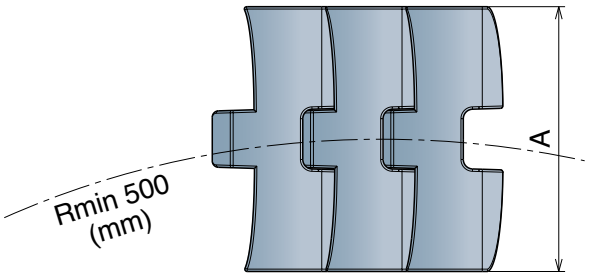

Advantages:

- Heavy duty
- 20% Reduced gap link
- 95% Closed surface

SAMPLE BOX
Art.-Nr. 999800

10 feet
3.048 m
120 links

pg. 328-329
pg. 141-147
pg. 651>661

Article-Nr.	Ref.	A (Plate Width) mm	Weight kg/m	Max working load (N)	Sideflex radius mm	Material
11510103	LFA 260 M FT K330	83,8	1,75	2000	500	LFA
11510105	LFA 260 M FT K450	114,3	2,30			
11510303	MX 260 M FT K330	83,8	1,75	1600	500	MX
11510305	MX 260 M FT K450	114,3	2,30			
11513003	PFX 260 M FT K330	83,8	1,65	1600	500	PFX
11513005	PFX 260 M FT K450	114,3	2,20			
11511603	DKM 260 M FT K330	83,8	1,75	2000	500	DKM
11511605	DKM 260 M FT K450	114,3	2,30			
11512303	LFA 260 M FT K330	83,8	1,75	2000	500	LFB
11512305	LFA 260 M FT K450	114,3	2,30			

260 M FG

Catena curvilinea
Sideflexing belt/chain / Kurvengängige Mattenkette

MAGNETIC SYSTEM

Delivery: Easy | Standard

Pins: Ferritic SS | **Backflex radius min.:** 130 mm

25.4mm PITCH

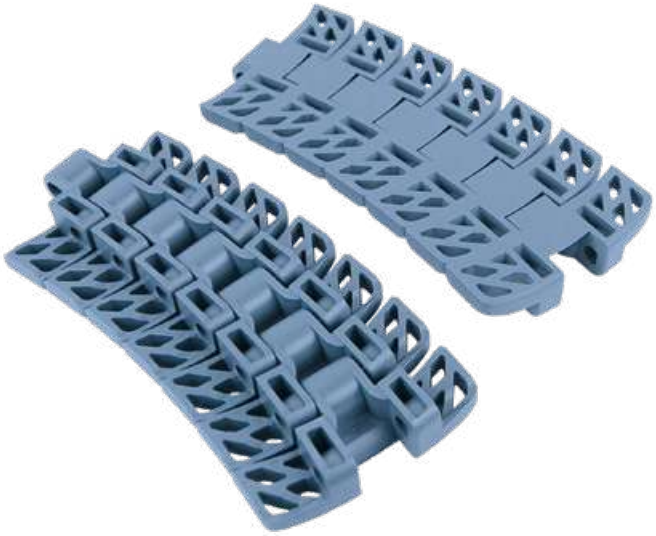

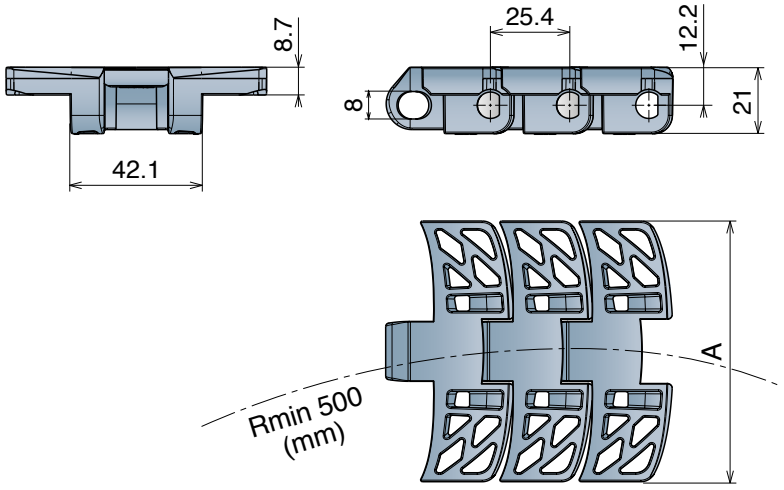

10 feet
3.048 m
120 links

pg. 328-329
pg. 141-147
pg. 651>661

Article-Nr.	Ref.	A (Plate Width) mm	Weight kg/m	Max working load (N)	Sideflex radius mm	Material
11540103	LFA 260 M FG K330	83,8	1,62	2000	500	LFA
11540105	LFA 260 M FG K450	114,3	2,13			
11540303	MX 260 M FG K330	83,8	1,62	1600	500	MX
11540305	MX 260 M FG K450	114,3	2,13			
11543003	PFX 260 M FG K330	83,8	1,52	1600	500	PFX
11543005	PFX 260 M FG K450	114,3	2,03			
11542303	LFB 260 M FG K330	83,8	1,62	2000	500	LFB
11542305	LFB 260 M FG K450	114,3	2,13			

Oadby Core product range
Oadby Available from stock in Leicester
Easy Available from stock in Italy
Standard Produced to order in Italy

Movex

260 TAB

Catena curvilinea
Sideflexing belt/chain / Kurvengängige Mattenkette

TAB SYSTEM

Delivery: Easy | Standard

Pins: Ferritic SS | **Backflex radius min.:** 130 mm

25.4mm PITCH

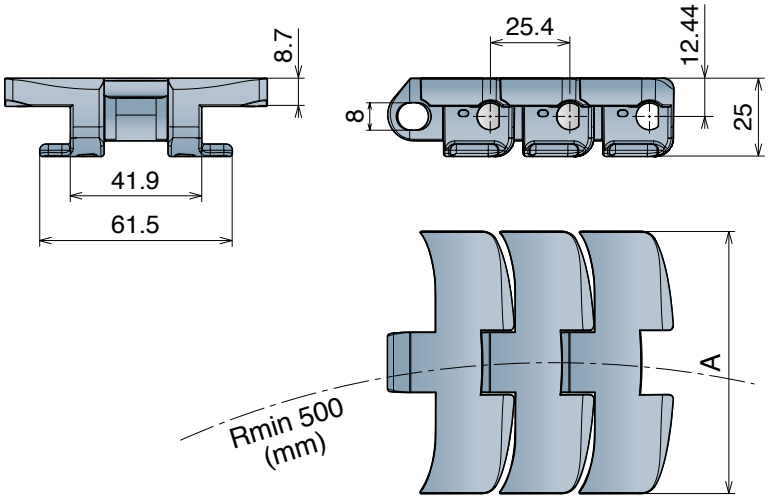

10 feet
3.048 m
120 links

pg. 328-329
pg. 163
pg. 651>661

Article-Nr.	Ref.	A (Plate Width) mm	Weight kg/m	Max working load (N)	Sideflex radius mm	Material
11520103	LFA 260 TAB K330	83,8	1,85	2000	500	LFA
11520105	LFA 260 TAB K450	114,3	2,00			
11520303	MX 260 TAB K330	83,8	1,85	1600	500	MX
11520305	MX 260 TAB K450	114,3	2,00			
11523003	PFX 260 TAB K330	83,8	1,75	1600	500	PFX
11523005	PFX 260 TAB K450	114,3	1,90			
11521603	DKM 260 TAB K330	83,8	1,85	2000	500	DKM
11521605	DKM 260 TAB K450	114,3	2,00			
11522303	LFB 260 TAB K330	83,8	1,85	2000	500	LFB
11522305	LFB 260 TAB K450	114,3	2,00			

Oadby Core product range
Oadby Available from stock in Leicester
Easy Available from stock in Italy
Standard Produced to order in Italy

261 M FT

Catena curvilinea
Sideflexing belt/chain / Kurvengängige Mattenkette

MAGNETIC SYSTEM

Delivery: Easy Standard

Pins: Ferritic SS

25.4mm PITCH

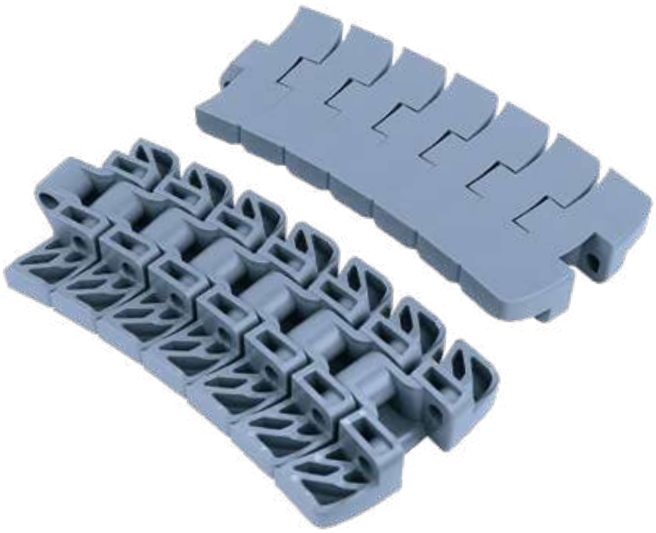

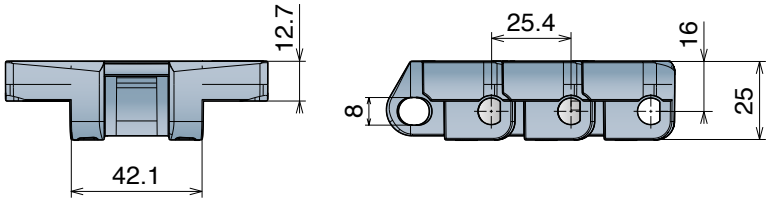

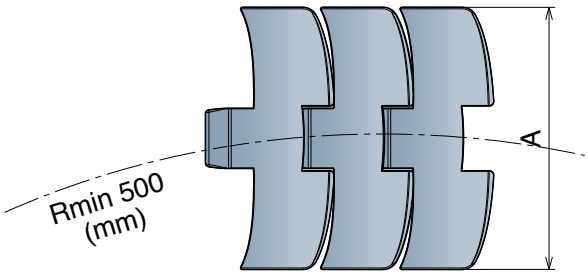

10 feet
3.048 m
120 links

pg. 328-329
pg. 148-154
pg. 651>661

Article-Nr.	Ref.	A (Plate Width) mm	Weight kg/m	Max working load (N)	Sideflex radius mm	Material
11530103	LFA 261 M FT K330	83,8	2,00	2000	500	LFA
11530105	LFA 261 M FT K450	114,3	2,52			
11530303	MX 261 M FT K330	83,8	2,00	1600	500	MX
11530305	MX 261 M FT K450	114,3	2,52			
11533003	PFX 261 M FT K330	83,8	2,00	1600	500	PFX
11533005	PFX 261 M FT K450	114,3	2,52			
11531603	DKM 261 M FT K330	83,8	2,00	2000	500	DKM
11531605	DKM 261 M FT K450	114,3	2,52			
11531703	MWX 261 M FT K330	83,8	2,16	2000	500	MWX
11531705	MWX 261 M FT K450	114,3	2,70			

Oadby Core product range
Oadby Available from stock in Leicester
Easy Available from stock in Italy
Standard Produced to order in Italy

Movex

261 TAB

Catena curvilinea
Sideflexing belt/chain / Kurvengängige Mattenkette

TAB SYSTEM

Delivery: Easy Standard

Pins: Ferritic SS

25.4mm PITCH

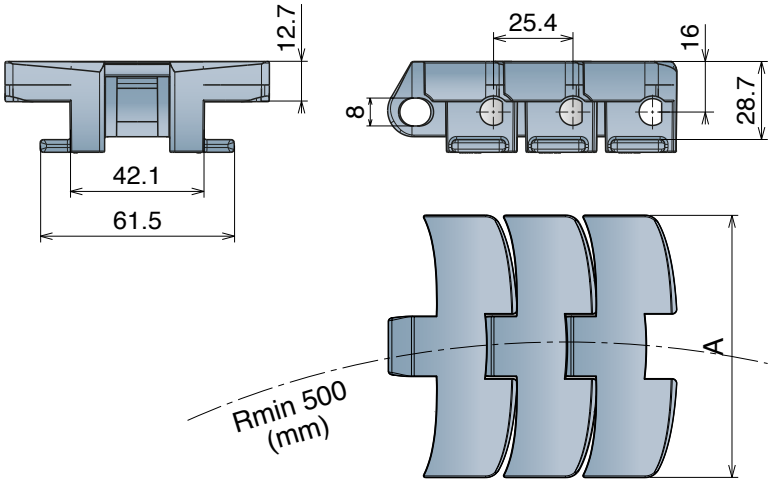

10 feet
3.048 m
120 links

pg. 328-329
pg. 163
pg. 651>661

Article-Nr.	Ref.	A (Plate Width) mm	Weight kg/m	Max working load (N)	Sideflex radius mm	Material
11900103	LFA 261 TAB K330	83,8	2,00	2000	500	LFA
11900105	LFA 261 TAB K450	114,3	2,52			
11900303	MX 261 TAB K330	83,8	2,00	1600	500	MX
11900305	MX 261 TAB K450	114,3	2,52			
11903003	PFX 261 TAB K330	83,8	2,00	1600	500	PFX
11903005	PFX 261 TAB K450	114,3	2,52			
11901603	DKM 261 TAB K330	83,8	2,00	2000	500	DKM
11901605	DKM 261 TAB K450	114,3	2,52			
11901703	MWX 261 TAB K330	83,8	2,16	2000	500	MWX
11901705	MWX 261 TAB K450	114,3	2,70			

NoseBars

RANGE EXTENSION

Movex NoseBars improve the efficiency of your production line.

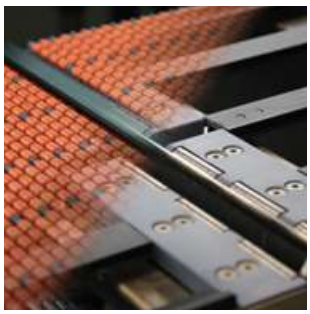

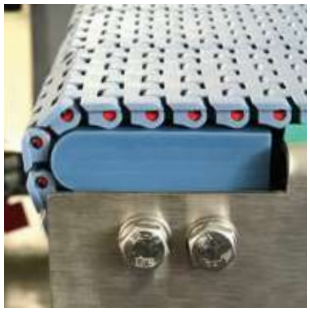

Small products are becoming a challenge when they have to be transferred from head-to-tail, especially when they don't have a flat base like cans and petaloid bottles.

This is becoming even more critical when the line capacity is pushed to the limit and speeds or operating hours could compromise the required efficiency.

Movex NoseBars are the best solution for a combination of short transfer and high performance.

Moreover, they will let your line:

- **Running with limited maintenance**
- **Exceeding in performances**
- **Achieving high speeds and loads**

Paying specific attention during the development as well as during the automated production, together with our constant quality control checks, we have reached these features which can be reflected to all Movex products.

Movex NoseBars are suitable for all applications and conditions. Made from super-performance ***Blulub®***, for a reduced coefficient of friction, the smallest gaps are reached between the belts to assure a smooth and precise transfer.

Movex NoseBars are available in three different versions: standard, with rollers and with bearings. Specific the executions with rollers and bearings are ideal for high speed and/or high load applications.

Less friction, longer lifetime, less belt elongation and less maintenance are facts which makes the Movex NoseBars reliable and longlasting products.

Find out the best combination for your application with our modular belts and NoseBars in the selection chart at page 272.

Blulub®

Do you know what it is?

All Movex NoseBars are made with a compound developed by Movex, the ***Blulub®***, a special high-performance material which contains the latest generation of solid lubricants.

The use of products made in ***Blulub®*** is designed for applications with limited lubrication, higher speeds and/or higher loads.

Blulub® requires less energy and with its lower coefficient of friction, improves the product stability and wear life of modular belts.

One piece

PATENTED

Custom made NoseBar, supplied in a single piece.

One piece is the patented system from Movex that reduces the required conveyor maintenance time drastically.

One piece is very quick to install and easy to clean!

More info at page 282>284

All Movex **NoseBar are made in Blulub®**, with the latest generation of solid lubricants.

High precision machined part with reduced tolerances over nose radius and flatness.

Complete interchangeability between versions: Standard, with Bearings and with Rollers

Available in several widths to fit different modular belt series and sizes.

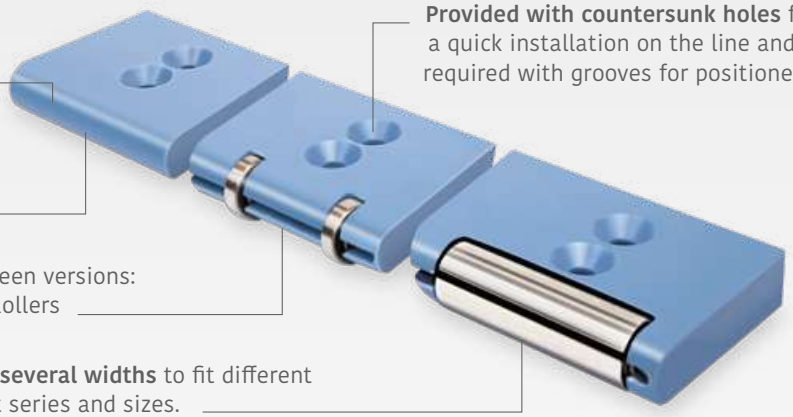

Provided with countersunk holes for a quick installation on the line and if required with grooves for positioners.

Three different options, fully interchangeable:

Standard
GENERAL APPLICATIONS

Static NoseBars with unique properties due the special Movex *BluLub®* compound are the ideal choice for any type of application, help improving the line efficiency, reducing dust and the frequency of maintenance.

- Available diameters: **6 / 19 / 22 mm**
- Available also with grooves for positioners
- Can be machined to width, according your needs

with Bearings
HIGH-SPEED APPLICATIONS

Dynamic NoseBars with Bearings help improving the line efficiency and grant a longer life compared to traditional ones, minimizing the coefficient of friction and generating less wear. The rotating chrome steel bearings create an improved situation specific for high-speed applications.

- Available diameters: **19 / 22 mm**
- Available also with grooves for positioners
- Can be machined to width, according your needs

with Rollers
HIGH-LOAD APPLICATIONS

Dynamic NoseBars with Rollers and bearings are long-lasting component that increase the efficiency of the processing line. Thanks to its sturdy stainless steel rollers, they are also the ideal choice for heavy load applications or high abrasive working conditions like dusts, liquids, etc.

- Available diameter: **19 mm**
- Available also with grooves for positioners (only for 521 FT)
- Can be machined to width, according your needs

NoseBar selection and Transfer lengths

Movex modular belts	Belt Pitch (mm)	Nosebar Ø (mm)	STANDARD	WITH BEARINGS	WITH ROLLERS
510 FT	8	6	Pag 273	NOT APPLICABLE	NOT APPLICABLE
520 FT, 520 HD FT, 520 FTT, 520 FG, 520 GT, 520 LBP, 520 PRO LBP, 520 M	12,7	19	Pag 273	Pag 277	Pag 280
521 FT	12,7	19	Pag 274	Pag 277	Pag 280
522 HD FT, 522 HD OTB	12,7	19	Pag 274	Pag 278	Pag 281
525 HD FT, 525 FTT, 525 HD FG, 525 HD GT	15	19	Pag 273	Pag 277	Pag 280
530 FT, 530 FTT, 530 GT	15	19	Pag 275	Pag 278	Pag 281
530 LBP	15	19	Pag 275	Pag 279	NOT APPLICABLE
530 PRO LBP	15	19	Pag 276	Pag 279	NOT APPLICABLE

Standard and with bearings NoseBars are also available with a diameter of 22mm, contact your sales representative for more info.

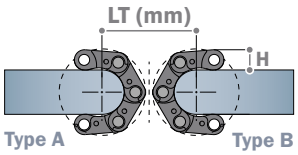

Modular belt - Type A	Modular belt - Type B: 510 FT	520 HD FT	520 FG	521 FT	522 HD FT	525 HD FT	525 HD FG	530 FT	520 GT	525 HD GT	530 LBP	530 PRO LBP	520 PRO LBP	520 LBP
510 FT - H 6mm	22	31	31	31	31	31	31	31	33	33	33,5	33,5	38,5	41,5
520 HD FT - H 8,7mm	31	40	40	40	40	40	40	40	42	42	43	43	48	51
520 FG - H 8,7mm	31	40	40	40	40	40	40	40	42	42	43	43	48	51
521 FT - H 8,7mm	31	40	40	40	40	40	40	40	42	42	43	43	48	51
522 HD FT - H 8,7mm	31	40	40	40	40	40	40	40	42	42	43	43	48	51
525 HD FT - H 8,7mm	31	40	40	40	40	40	40	40	42	42	43	43	48	51
525 HD FG - H 8,7mm	31	40	40	40	40	40	40	40	42	42	43	43	48	51
530 FT - H 8,7mm	31	40	40	40	40	40	40	40	42	42	43	43	48	51
520 GT - H 10,7mm	33	42	42	42	42	42	42	42	44	44	45	45	50	53
525 HD GT - H 10,7mm	33	42	42	42	42	42	42	42	44	44	45	45	50	53
530 LBP - H 12,2mm	33,5	43	43	43	43	43	43	43	45	45	45	45	50	53
530 PRO LBP - H 12,2mm	33,5	43	43	43	43	43	43	43	45	45	45	45	50	53
520 PRO LBP - H 18mm	38,5	48	48	48	48	48	48	48	50	50	50	50	55	58
520 LBP - H 20,7mm	41,5	51	51	51	51	51	51	51	53	53	53	53	58	61

NoseBars for 510 Series

Delivery: Easy Standard

Article-Nr.	K (mm)
22818	76,2 (3')
22819	152,4 (6')

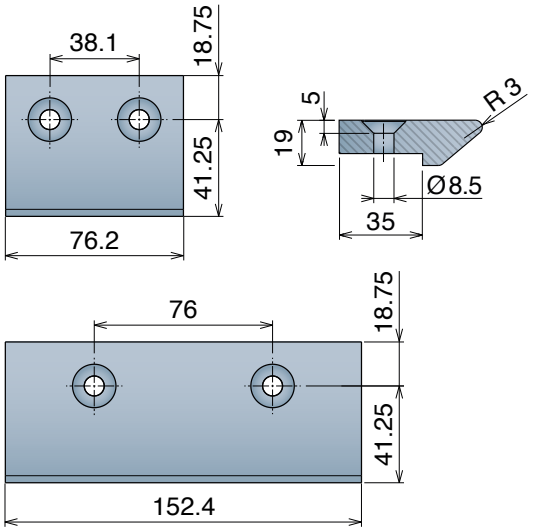

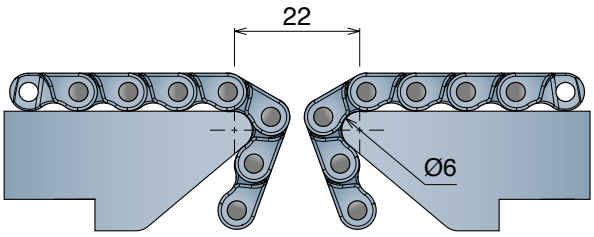

NoseBars for 520/525 Series

Delivery: Easy Standard

Article-Nr.	K (mm)
22801	85
22802	170
22803	255

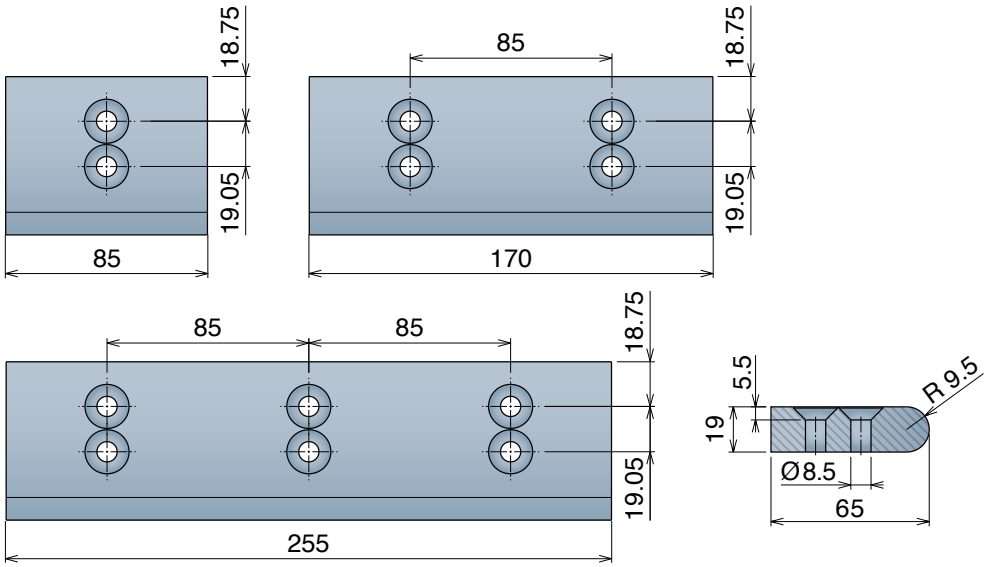

Version B - With 1 Positioner | Version C - With 2 Positioners

Article-Nr.	K (mm)
22807	85

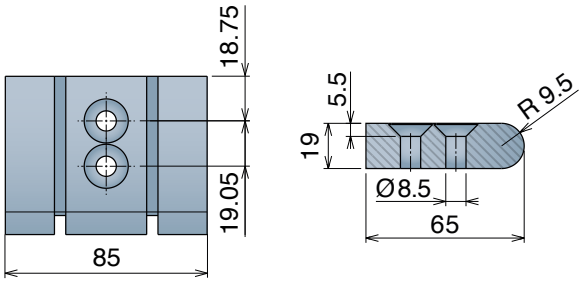

NoseBars for 521 Series

Article-Nr.	K (mm)
22840	190,5 (7.5')

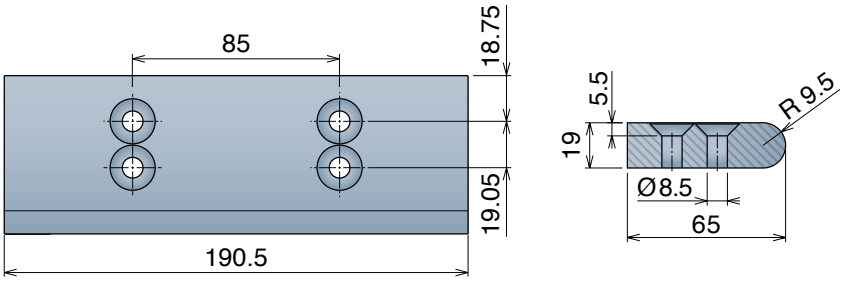

Version B - With 1 Positioner | Version C - With 2 Positioners

Article-Nr.	K (mm)
22843	190,5 (7.5')

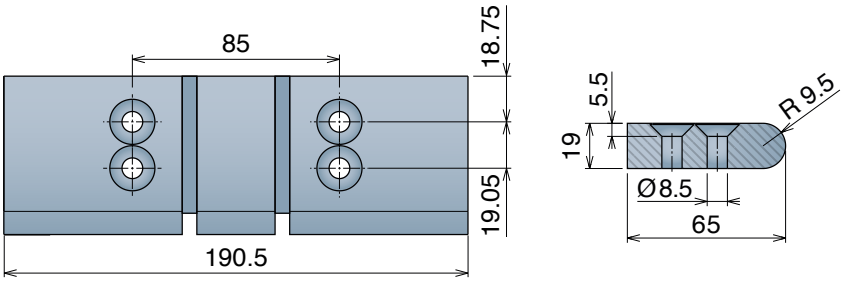

NoseBars for 522 HD Series

Delivery: Easy Standard

Article-Nr.	K (mm)	Type
22820	29	A
22821	34	A
22822	37	A
22823	51 (2')	A
22808	76,2 (3')	A
22824	100	B

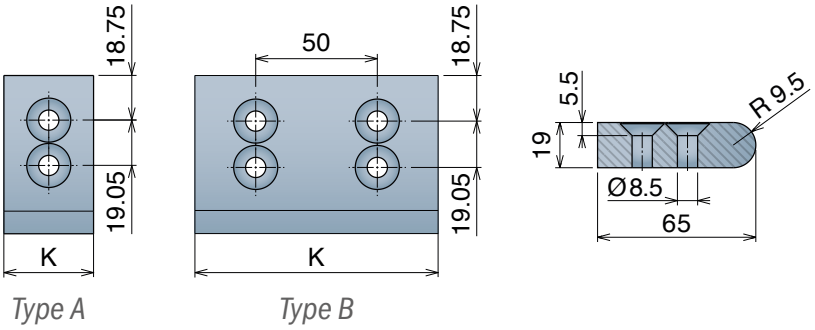

Type A Type B

Version B - With 1 Positioner | Version C - With 2 Positioners

Article-Nr.	K (mm)
22820P	29
22821P	34
22822P	37
22823P	51 (2')
22808P	76,2 (3')

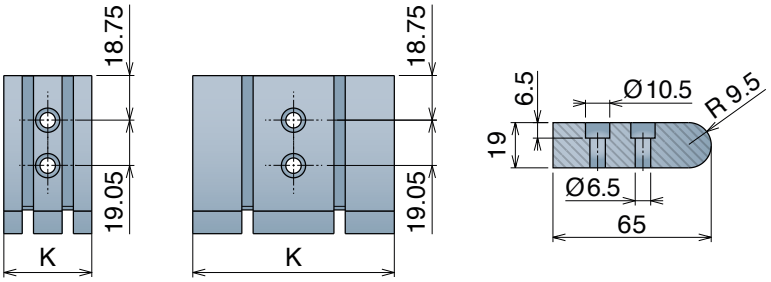

Oadby Core product range
Oadby Available from stock in Leicester
Easy Available from stock in Italy
Standard Produced to order in Italy

Movex

NoseBars for 530 Series

(LBP version excluded)

Delivery: Easy Standard

Article-Nr.	K (mm)
22808	76,2 (3')
22809	152,4 (6')

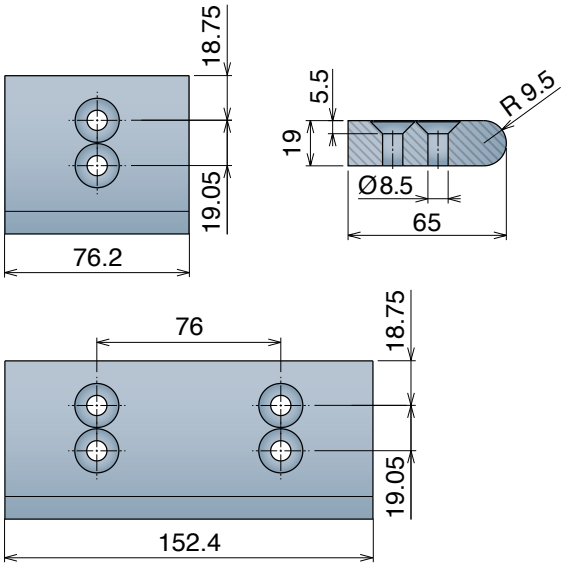

NoseBar for 530 LBP

Article-Nr.	K (mm)
22867	152,4 (6')

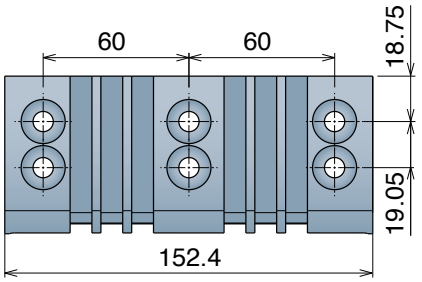

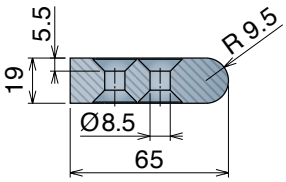

How to use Movex 530 LBP double-face Nosebar

Idler Side

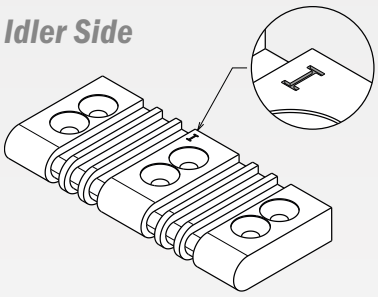

Active Side

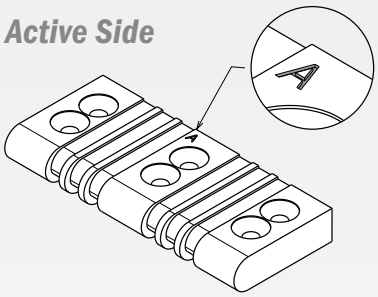

Movex 530 LBP Nosebars are special Nosebars, specific to optimize the characteristics of this particular belt. It can be installed in two different ways: **idler side** and **active side**, depending if you want to obtain the accumulation or acceleration effects of the goods. In both modalities the same Nosebar is used: it simply needs to be installed on one side rather than the other. One face of the Nosebar is set up for the accumulation function and the opposite one for the acceleration function.

V = X

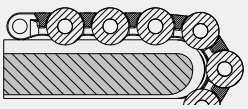

Idler System (sectional view)

The nosebar allows the belts rollers to remain raised above the surface, free to roll.

V = 2X

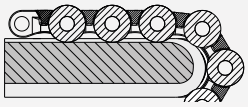

Active System (sectional view)

The nosebar allows the belt rollers to touch the surface, increasing the speed of the goods.

NoseBar *for 530 PRO LBP*

Article-Nr.	K (mm)
22865	76,2 (3')
22866	152,4 (6')

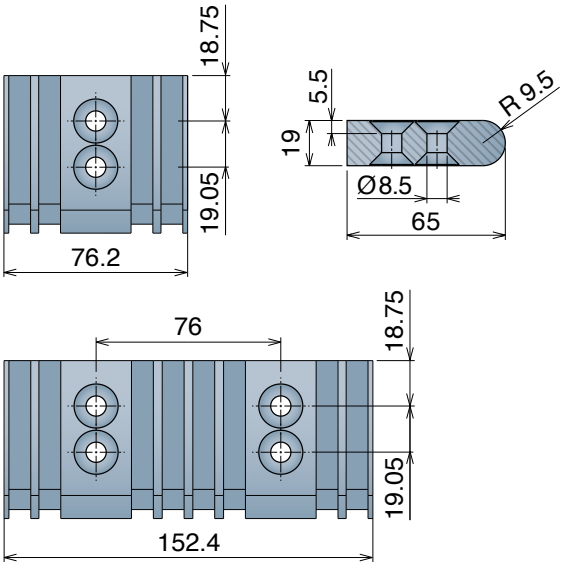

How to use Movex 530 Pro LBP double-face Nosebar

Idler Side

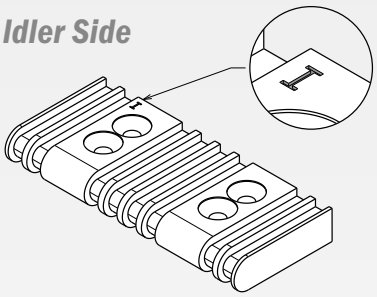

Active Side

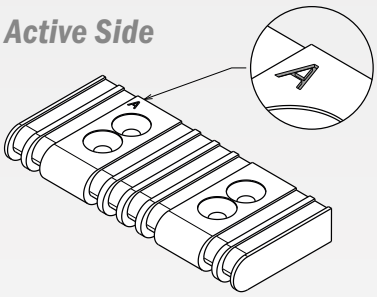

Movex 530 Pro LBP Nosebars are special Nosebars, specific to optimize the characteristics of this particular belt. It can be installed in two different ways: **idler side** and **active side**, depending if you want to obtain the accumulation or acceleration effects of the goods. In both modalities the same Nosebar is used: it simply needs to be installed on one side rather than the other. One face of the Nosebar is set up for the accumulation function and the opposite one for the acceleration function.

V = X

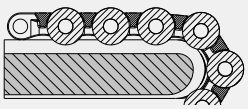

Idler System (sectional view)

The nosebar allows the belts rollers to remain raised above the surface, free to roll.

V = 2X

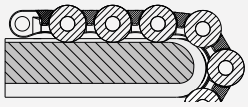

Active System (sectional view)

The nosebar allows the belt rollers to touch the surface, increasing the speed of the goods.

NoseBars with Bearings *for 520/525 Series*

Delivery: Easy Standard

Article-Nr.	K (mm)
22811	85
22812	170
22813	255

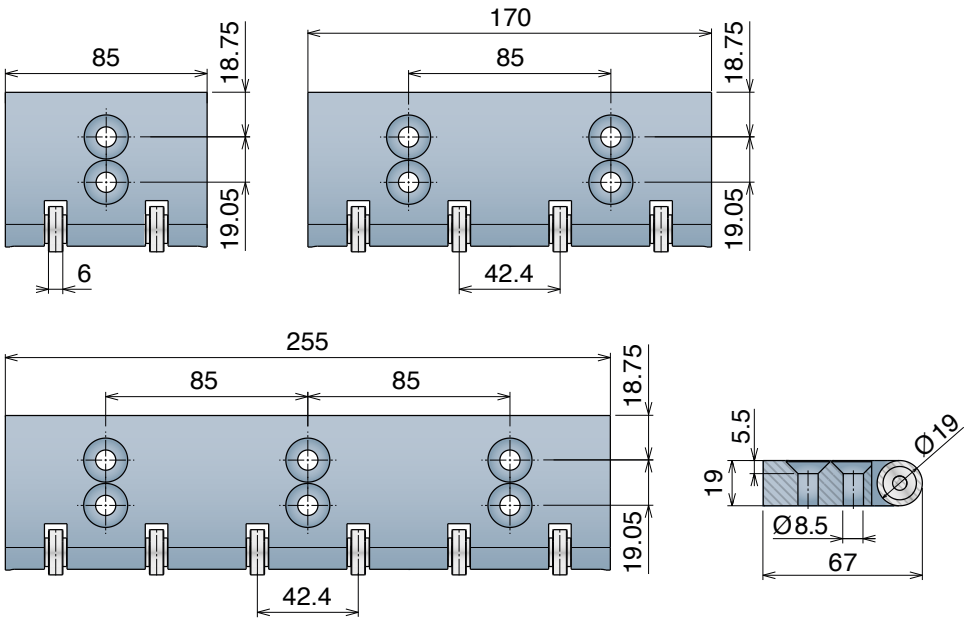

Version B - With 1 Positioner | Version C - With 2 Positioners

Article-Nr.	K (mm)
22817	85

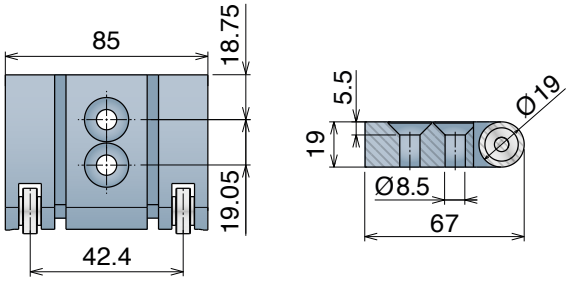

NoseBars with Bearings *for 521 Series*

Article-Nr.	K (mm)
22842C	190.5 (7.5')

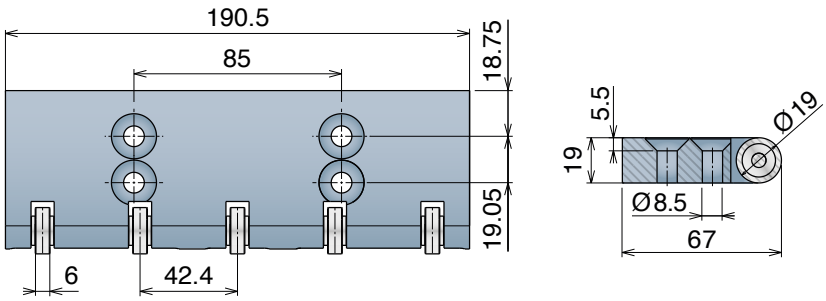

Version B - With 1 Positioner | Version C - With 2 Positioners

Article-Nr.	K (mm)
22845C	190.5 (7.5')

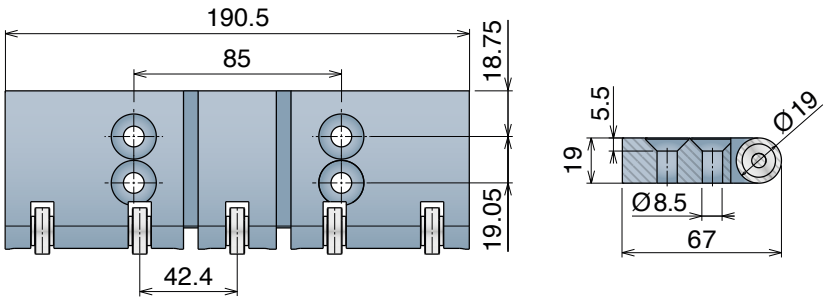

Materiale / *Material* / *Materialien:*
BluLub
Cuscinetti: Acciaio al cromo / *Bearings: Chrome steel / Lagereinsätze: Chrom-Stahl*

NoseBars with Bearings *for 522 HD Series*

Delivery: Easy Standard

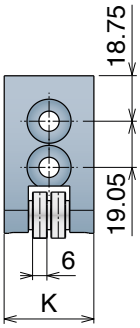

Type A

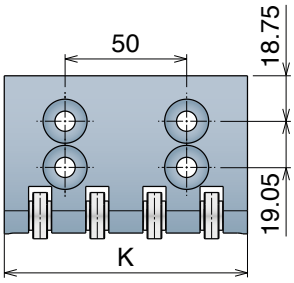

Type B

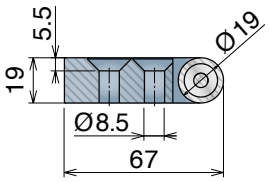

Article-Nr.	K (mm)	Type
22850	29	A
22851	34	A
22852	37	A
22853	51 (2')	A
22861	76,2 (3')	A
22854	100	B

Version B - With 1 Positioner | Version C - With 2 Positioners

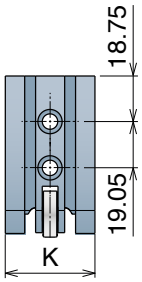

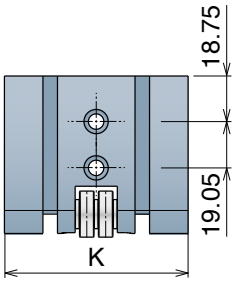

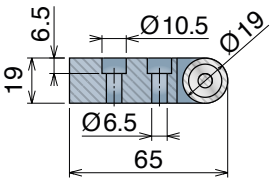

Article-Nr.	K (mm)
22850P	29
22851P	34
22852P	37
22853P	51 (2')
22861P	76,2 (3')

NoseBars with Bearings *for 530 Series* *(LBP version excluded)*

Delivery: Easy Standard

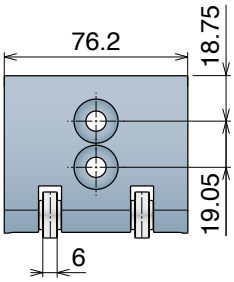

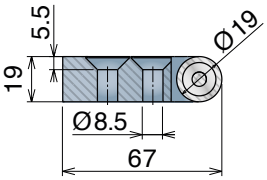

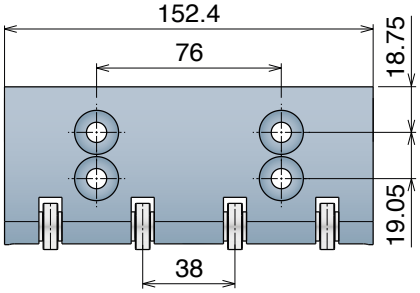

Article-Nr.	K (mm)
22861	76,2 (3')
22862	152,4 (6')

Oadby Core product range
Oadby Available from stock in Leicester
Easy Available from stock in Italy
Standard Produced to order in Italy

Movex

NoseBar with Bearings *for 530 LBP*

Article-Nr.	K (mm)
22868	152,4 (6')

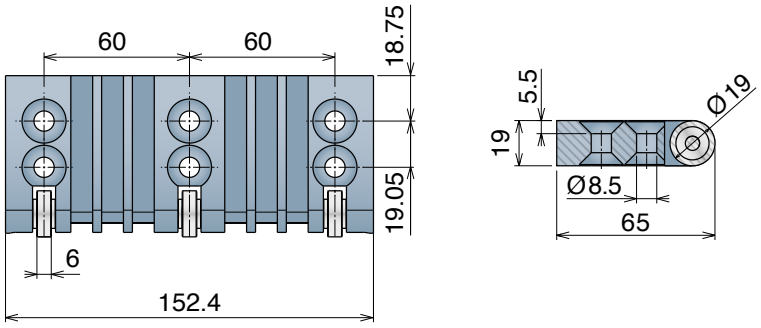

NoseBars with Bearings *for 530 PRO LBP*

Delivery: Easy Standard

Article-Nr.	K (mm)
22863	76,2 (3')
22864	152,4 (6')

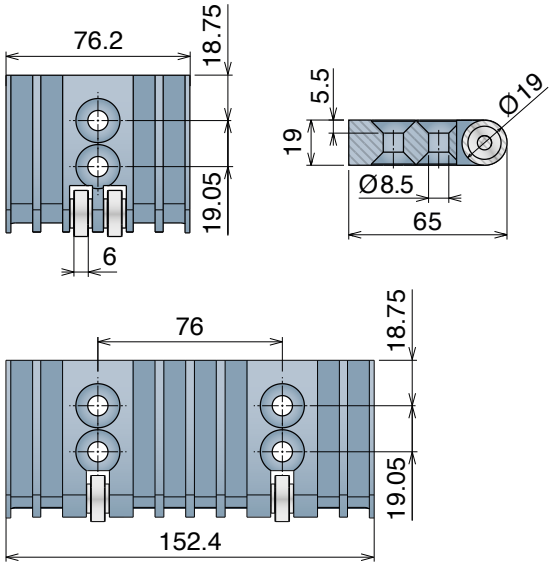

How to use Movex 530 LBP and Pro LBP double-face Nosebar

Idler Side

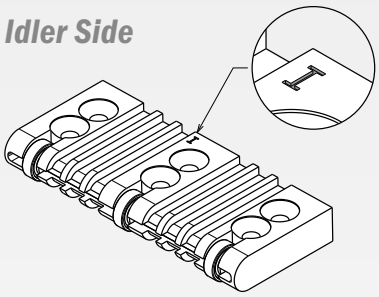

Active Side

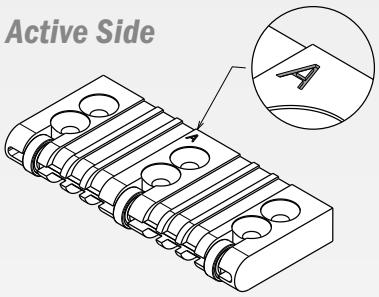

Movex 530 LBP and Pro LBP Nosebars are special Nosebars, specific to optimize the characteristics of this particular belt. It can be installed in two different ways: **idler side** and **active side**, depending if you want to obtain the accumulation or acceleration effects of the goods. In both modalities the same Nosebar is used: it simply needs to be installed on one side rather than the other. One face of the Nosebar is set up for the accumulation function and the opposite one for the acceleration function.

V = X

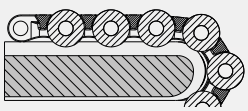

Idler System (sectional view)
The nosebar allows the belts rollers to remain raised above the surface, free to roll.

V = 2X

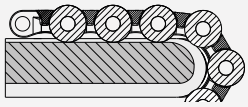

Active System (sectional view)
The nosebar allows the belt rollers to touch the surface, increasing the speed of the goods.

Materiale / *Material* / *Materialien:*
BluLub Cuscinetti: Acciaio al cromo / *Bearings: Chrome steel / Lagereinsätze: Chrom-Stahl*
Rulli: Acciaio inox / *Rollers: Stainless steel / Rollen: Edelstahl*

NoseBars with Rollers *for 520/525 HD Series*

Delivery: Easy Standard

Article-Nr.	K (mm)
22814	85
22815	170
22816	255

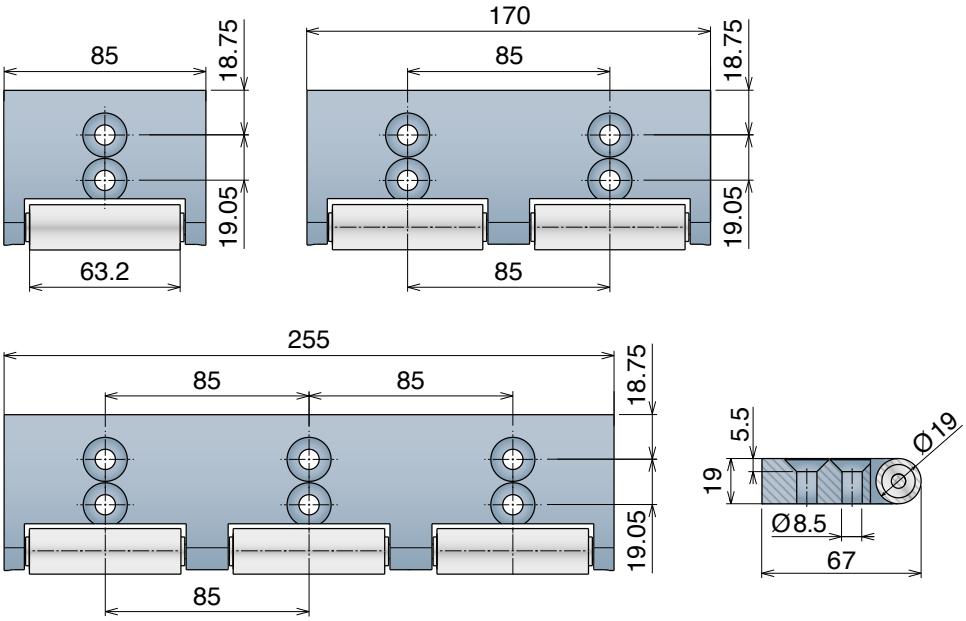

NoseBars with Rollers *for 521 Series*

Article-Nr.	K (mm)
22841B	190.5 (7.5')

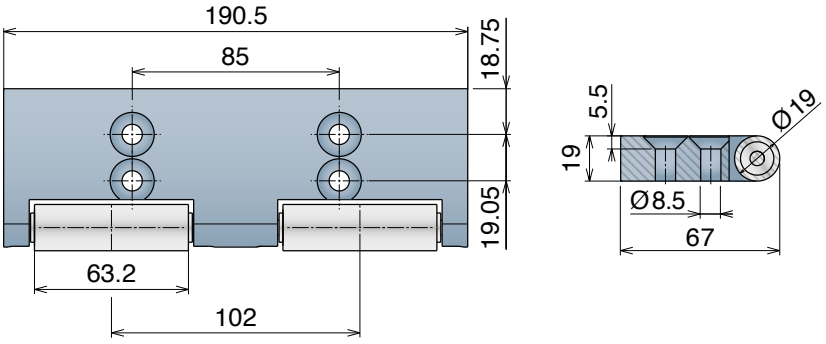

Version B - With 1 Positioner | Version C - With 2 Positioners

Article-Nr.	K (mm)
22844B	190.5 (7.5')

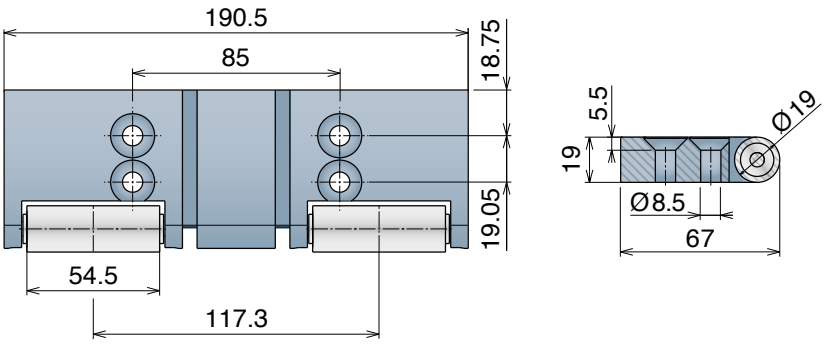

Oadby Core product range
Oadby Available from stock in Leicester
Easy Available from stock in Italy
Standard Produced to order in Italy

Movex

NoseBars with Rollers for 522 HD Series

Article-Nr.	K (mm)
22823B	51 (2')
22808B	76,2 (3')
22824B	100

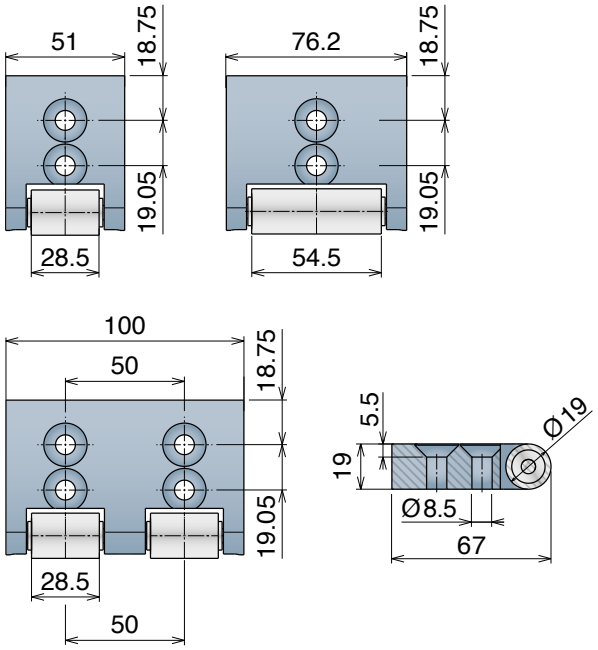

NoseBars with Rollers for 530 Series (LBP version excluded)

Article-Nr.	K (mm)
22808B	76,2 (3')
22809B	152,4 (6')

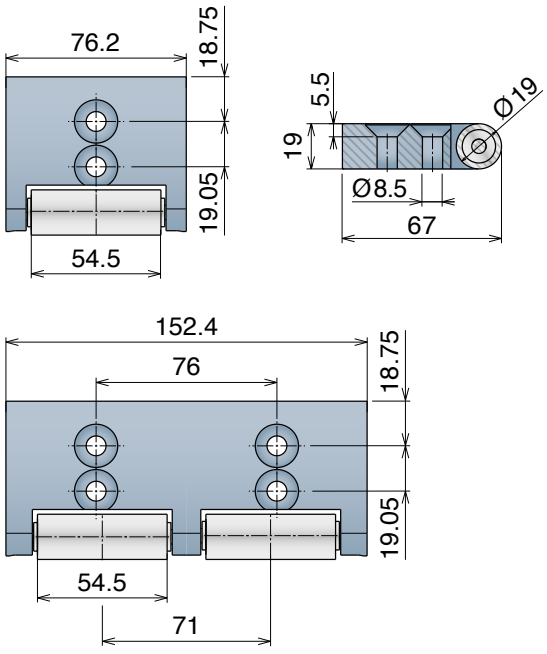

One piece Standard

RANGE EXTENSION PATENTED

IDEAL FOR GENERAL APPLICATIONS

The custom made Movex Nosebars supplied in a single piece to perfectly match your needs.

One piece is a machined-to-width nosebar patented by Movex that greatly reduces the time necessary for the conveyor maintenance: being a single piece, of the required width, it is quick to install, easy to clean and offer a better level of hygiene.

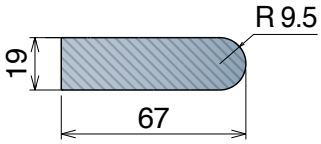

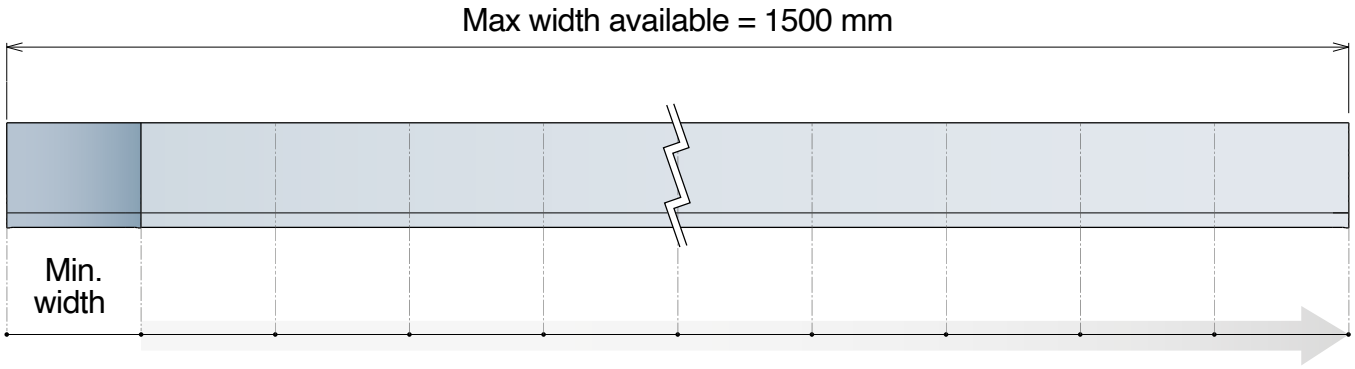

520/525 Series

Min witdth:
85 mm

Article-Nr.	K (mm)
2280425	425
2280510	510
2280595	595
2280680	680
2280765	765
2280850	850

522 HD Series

Min witdth:
50 mm

Article-Nr.	K (mm)
2280200	200
2280250	250
2280300	300
2280350	350
2280400	400
2280450	450

530 Series

Min witdth:
3 inch

Article-Nr.	K (mm)
2280457	457,2
2280533	533,4
2280610	609,6
2280686	685,8
2280762	762
2280838	838,2

Available different widths and with holes on request.

Advantages:

- Single piece
- Less fixing point
- Hygienical concept
- Easy to install
- Improved strength
- Fast maintenance
- Easy clean
- Reduced friction

One piece with Bearings

RANGE EXTENSION **PATENTED**

IDEAL FOR HIGH-SPEED APPLICATIONS

The custom made Movex Nosebars supplied in a single piece to perfectly match your needs.

One piece with Bearings is a machined-to-width nosebar patented by Movex that greatly reduces the time necessary for the conveyor maintenance: being a single piece with bearings, of the required width, it is quick to install, easy to clean, offers a better level of hygiene and is ideal for high-speed applications.

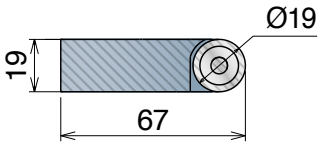

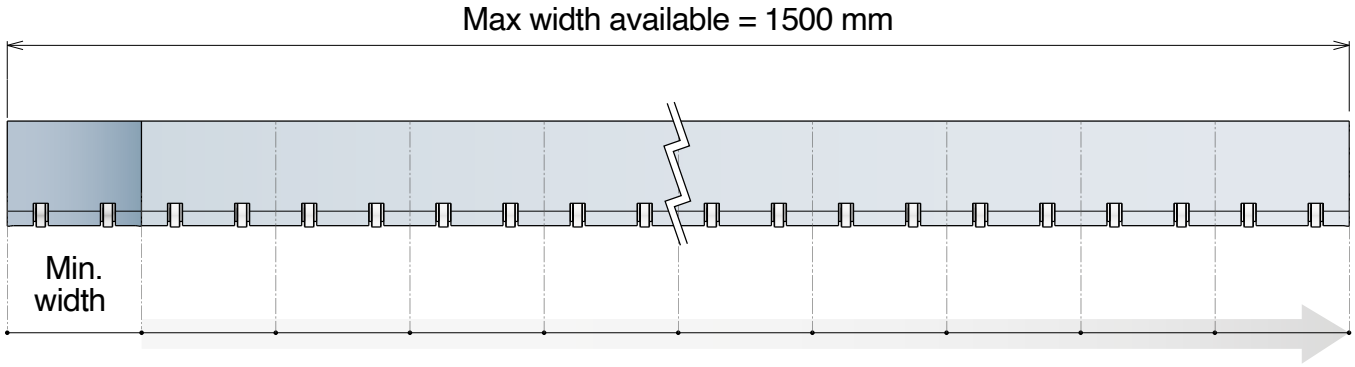

520/525 Series

Min witdth:
85 mm

Article-Nr.	K (mm)
2280425C	425
2280510C	510
2280595C	595
2280680C	680
2280765C	765
2280850C	850

522 HD Series

Min witdth:
50 mm

Article-Nr.	K (mm)
2280200C	200
2280250C	250
2280300C	300
2280350C	350
2280400C	400
2280450C	450

530 Series

Min witdth:
3 inch

Article-Nr.	K (mm)
2280457C	457,2
2280533C	533,4
2280610C	609,6
2280686C	685,8
2280762C	762
2280838C	838,2

Available different widths and with holes on request.

Advantages:

- Single piece
- Less fixing point
- Hygienical concept
- Easy to install
- Improved strength
- Fast maintenance
- Easy clean
- Reduced friction

Materiale / *Material* / *Materialien:* BluLub
Cuscinetti: Acciaio al cromo / *Bearings: Chrome steel / Lagereinsätze: Chrom-Stahl*
Rulli: Acciaio inox / *Rollers: Stainless steel / Rollen: Edelstahl*

One piece with Rollers

RANGE EXTENSION **PATENTED**

IDEAL FOR HIGH-LOAD APPLICATIONS

The custom made Movex Nosebars supplied in a single piece to perfectly match your needs.

One piece with Rollers and bearings is a machined-to-width nose-bar patented by Movex that greatly reduces the time necessary for the conveyor maintenance: being a single piece with Rollers, of the required width, it is quick to install, easy to clean, offers a better level of hygiene and is ideal for heavy-load applications.

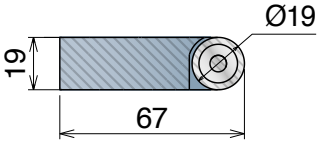

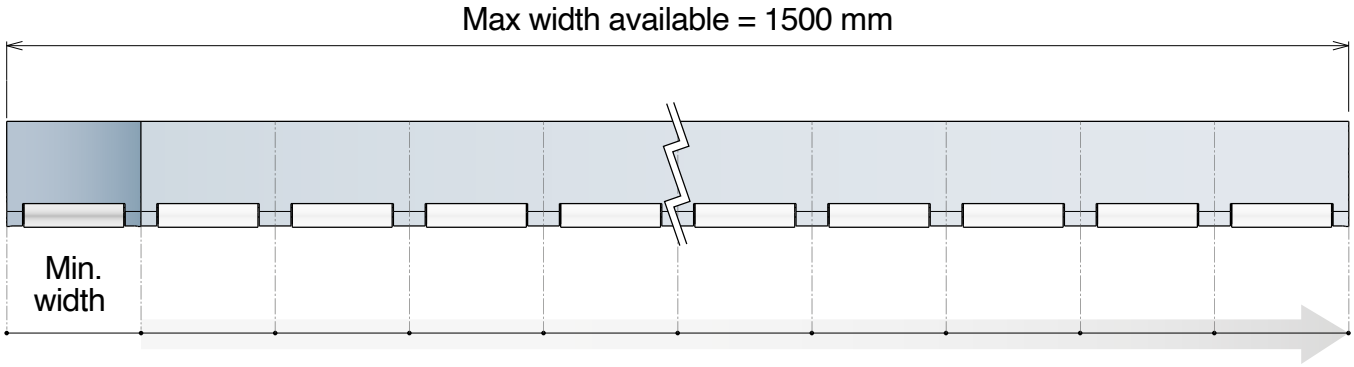

520/525 Series

Min witdth:
85 mm

Article-Nr.	K (mm)
2280425B	425
2280510B	510
2280595B	595
2280680B	680
2280765B	765
2280850B	850

522 HD Series

Min witdth:
50 mm

Article-Nr.	K (mm)
2280200B	200
2280250B	250
2280300B	300
2280350B	350
2280400B	400
2280450B	450

530 Series

Min witdth:
3 inch

Article-Nr.	K (mm)
2280457B	457,2
2280533B	533,4
2280610B	609,6
2280686B	685,8
2280762B	762
2280838B	838,2

Available different widths and with holes on request.

Advantages:

- Single piece
- Less fixing point
- Hygienical concept
- Easy to install
- Improved strength
- Fast maintenance
- Easy clean
- Reduced friction

982

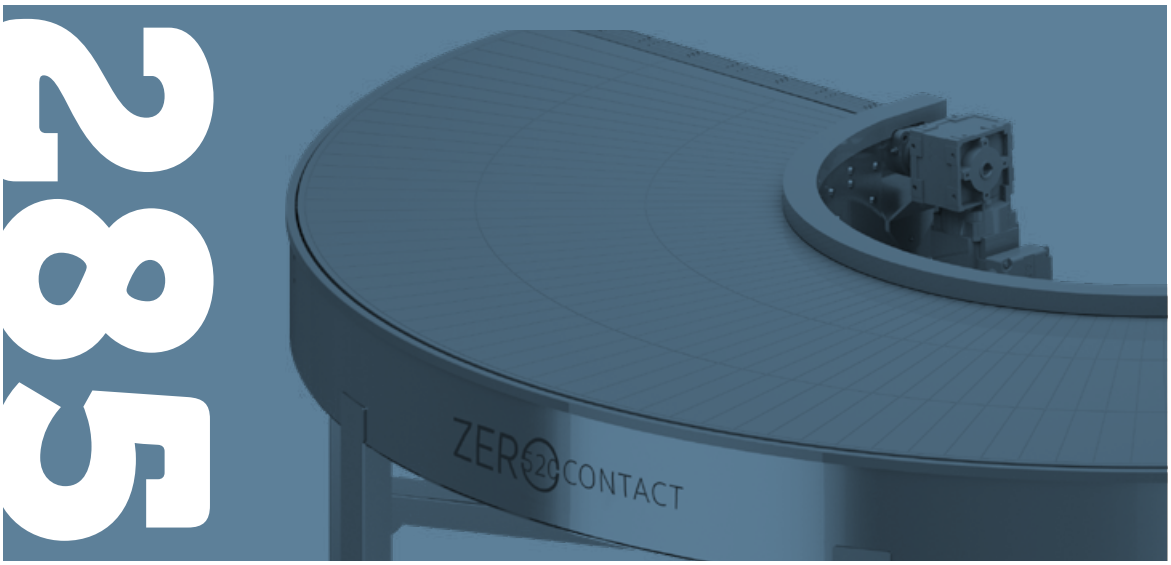

Modular Solutions

ZERO 520 CONTACT
CURVE CONVEYOR

Pag 286/287

ZERO PRO CONTACT
CURVE CONVEYOR

Pag 288/289

TWO TRACKS VERSION

ZERO PRO CONTACT
CURVE CONVEYOR

Pag 290/291

ZERO 520 CONTACT S
CURVE CONVEYOR

Pag 292/293

Accessories - Floor support

ZERO 520 CONTACT
STANDARD, PRO & S

Pag 294

Accessories - Gearmotors

ZERO 520 CONTACT
STANDARD, PRO & S

Pag 295

ZERO 510 ATP
ACTIVE TRANSFER PLATE

Pag 296/297

ZERO PRO ATP
ACTIVE TRANSFER PLATE

Pag 298/300

553 SORTER+
MULTIDIRECTIONAL CONVEYOR

Pag 301 > 304

Accessories - Floor support and Gearmotoros

553 SORTER+
FOR ALL VERSIONS AVAILABLE

Pag 305

Accessories - Photocells and guides

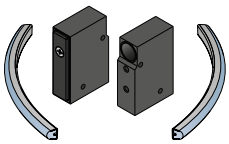

553 SORTER+
FOR ALL VERSIONS AVAILABLE

Pag 306

QUOTE MODULES
FOR ALL MODULAR SOLUTIONS

Pag 307 > 310

All pictures shown are for illustration purpose only.

ZERO 520 CONTACT

CURVE CONVEYOR

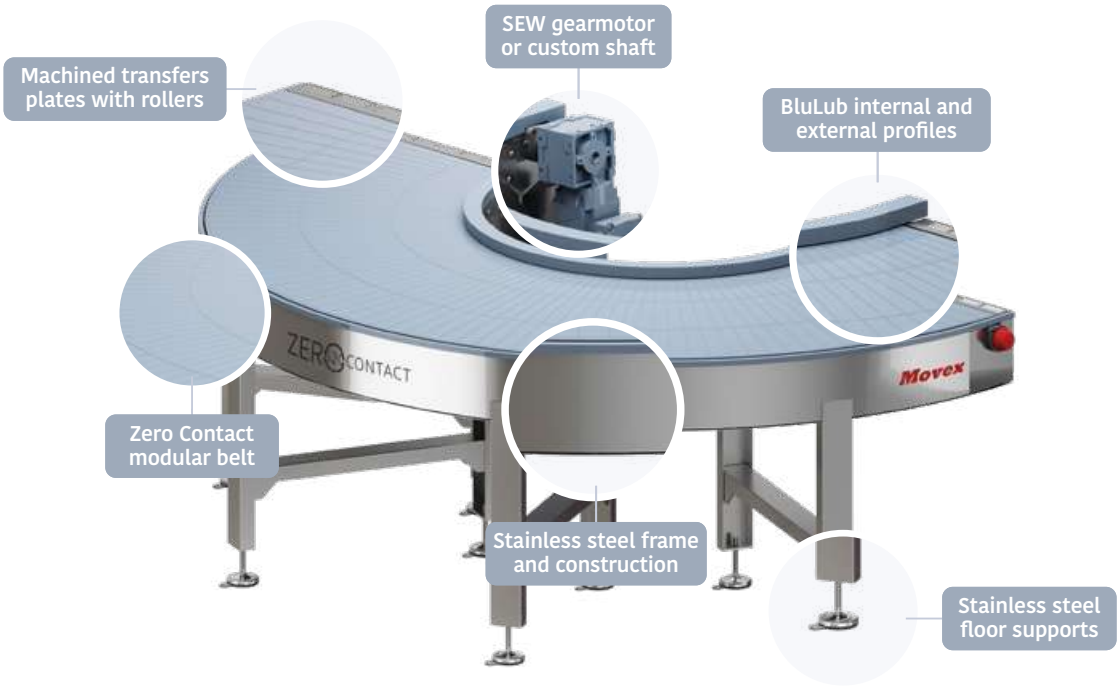

Product use

Zero Contact™ curve conveyor is available in different widths with a closed-top surface capable of handling a variety of package sizes, types and configurations including delicate products and applications found on shrink wrappers.

Zero Contact™ is designed to be used for the transport of various sized parts, is suitable for food and beverage industry thanks to the FDA approval, and helps reducing energy consumption and improving the line efficiency. It can be easily connected to existing layout.

INNER RADIUS 600mm ÷ 2000mm
BELT WIDTH 200mm ÷ 1600mm
MATERIAL OF MODULES Acetal (POM)
COLOR OF MODULES Pigeon Blue (RAL 5014)
PINS PBT White
PIN LOCK Clips
FRAME Stainless steel

TEMPERATURE RANGE
Dry: -40°C÷80°C Wet: -40°C ÷65°C
(Dry:-40°F ÷ 176°F Wet: -40°F ÷ 149°F)
MAX. WORKING LOAD
13.500 N/m belt width
CURVE ANGLE 15° ÷ 360°
OPEN AREA 0%

CURVES RANGE
Angle 90°

Left Version **CS**

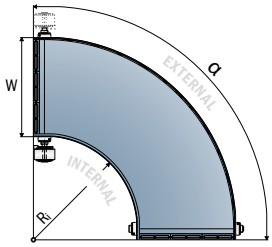

CD Right Version

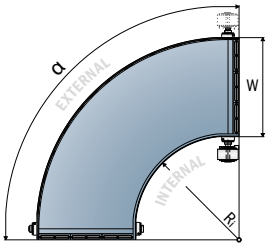

Width	Version	Ri 600mm	Ri 800mm	Ri 1000mm	Ri 1200mm	Ri 1400mm	Ri 1600mm	Ri 1800mm	Ri 2000mm
200mm	RIGHT	W02R06G090-CD	W02R08G090-CD	W02R10G090-CD	W02R12G090-CD	W02R14G090-CD	W02R16G090-CD	W02R18G090-CD	W02R20G090-CD
	LEFT	W02R06G090-CS	W02R08G090-CS	W02R10G090-CS	W02R12G090-CS	W02R14G090-CS	W02R16G090-CS	W02R18G090-CS	W02R20G090-CS
400mm	RIGHT	W04R06G090-CD	W04R08G090-CD	W04R10G090-CD	W04R12G090-CD	W04R14G090-CD	W04R16G090-CD	W04R18G090-CD	-
	LEFT	W04R06G090-CS	W04R08G090-CS	W04R10G090-CS	W04R12G090-CS	W04R14G090-CS	W04R16G090-CS	W04R18G090-CS	-
600mm	RIGHT	W06R06G090-CD	W06R08G090-CD	W06R10G090-CD	W06R12G090-CD	W06R14G090-CD	W06R16G090-CD	-	-
	LEFT	W06R06G090-CS	W06R08G090-CS	W06R10G090-CS	W06R12G090-CS	W06R14G090-CS	W06R16G090-CS	-	-
800mm	RIGHT	W08R06G090-CD	W08R08G090-CD	W08R10G090-CD	W08R12G090-CD	W08R14G090-CD	-	-	-
	LEFT	W08R06G090-CS	W08R08G090-CS	W08R10G090-CS	W08R12G090-CS	W08R14G090-CS	-	-	-
1000mm	RIGHT	W10R06G090-CD	W10R08G090-CD	W10R10G090-CD	W10R12G090-CD	-	-	-	-
	LEFT	W10R06G090-CS	W10R08G090-CS	W10R10G090-CS	W10R12G090-CS	-	-	-	-
1200mm	RIGHT	W12R06G090-CD	W12R08G090-CD	W12R10G090-CD	-	-	-	-	-
	LEFT	W12R06G090-CS	W12R08G090-CS	W12R10G090-CS	-	-	-		
1400mm	RIGHT	W14R06G090-CD	W14R08G090-CD	-	-	-	-		
	LEFT	W14R06G090-CS	W14R08G090-CS	-	-	-	-		
1600mm	RIGHT	W16R06G090-CD	-	-	-	-	-		
	LEFT	W16R06G090-CS	-	-	-	-	-		

These codes mean complete curve, except floor supports and gearmotor, if you need to include them please see page 294/295.

CURVES RANGE
Angle 180°

Left Version **CS**

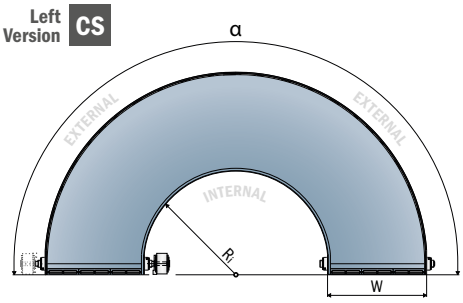

CD Right Version

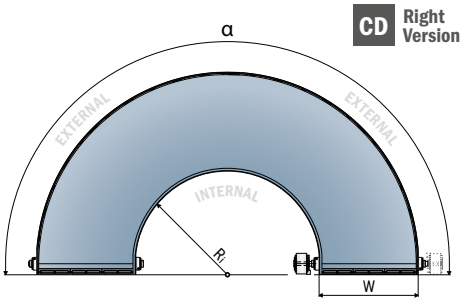

Width	Version	Ri 600mm	Ri 800mm	Ri 1000mm	Ri 1200mm	Ri 1400mm	Ri 1600mm	Ri 1800mm	Ri 2000mm
200mm	RIGHT	W02R06G180-CD	W02R08G180-CD	W02R10G180-CD	W02R12G180-CD	W02R14G180-CD	W02R16G180-CD	W02R18G180-CD	W02R20G180-CD
	LEFT	W02R06G180-CS	W02R08G180-CS	W02R10G180-CS	W02R12G180-CS	W02R14G180-CS	W02R16G180-CS	W02R18G180-CS	W02R20G180-CS
400mm	RIGHT	W04R06G180-CD	W04R08G180-CD	W04R10G180-CD	W04R12G180-CD	W04R14G180-CD	W04R16G180-CD	W04R18G180-CD	-
	LEFT	W04R06G180-CS	W04R08G180-CS	W04R10G180-CS	W04R12G180-CS	W04R14G180-CS	W04R16G180-CS	W04R18G180-CS	-
600mm	RIGHT	W06R06G180-CD	W06R08G180-CD	W06R10G180-CD	W06R12G180-CD	W06R14G180-CD	W06R16G180-CD	-	-
	LEFT	W06R06G180-CS	W06R08G180-CS	W06R10G180-CS	W06R12G180-CS	W06R14G180-CS	W06R16G180-CS	-	-
800mm	RIGHT	W08R06G180-CD	W08R08G180-CD	W08R10G180-CD	W08R12G180-CD	W08R14G180-CD	-	-	-
	LEFT	W08R06G180-CS	W08R08G180-CS	W08R10G180-CS	W08R12G180-CS	W08R14G180-CS	-	-	-
1000mm	RIGHT	W10R06G180-CD	W10R08G180-CD	W10R10G180-CD	W10R12G180-CD	-	-	-	-
	LEFT	W10R06G180-CS	W10R08G180-CS	W10R10G180-CS	W10R12G180-CS	-	-	-	-
1200mm	RIGHT	W12R06G180-CD	W12R08G180-CD	W12R10G180-CD	-	-	-	-	-
	LEFT	W12R06G180-CS	W12R08G180-CS	W12R10G180-CS	-	-	-	-	-
1400mm	RIGHT	W14R06G180-CD	W14R08G180-CD	-	-	-	-		
	LEFT	W14R06G180-CS	W14R08G180-CS	-	-	-	-		
1600mm	RIGHT	W16R06G180-CD	-	-	-	-	-		
	LEFT	W16R06G180-CS	-	-	-	-	-		

These codes mean complete curve, except floor supports and gearmotor, if you need to include them please see page 294/295.

NEW

ZERO PRO CONTACT

CURVE CONVEYOR

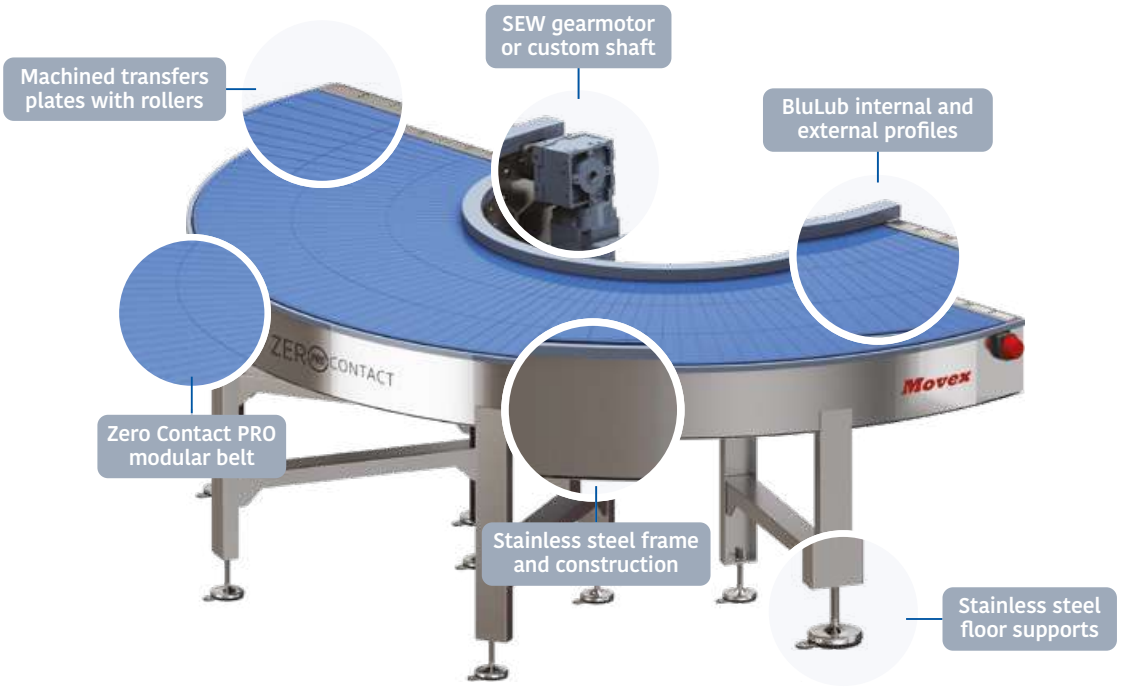

Product use

Zero Contact™ PRO is the right choice for heavy duty applications with high abrasive conditions, like sand, salt as well as production of tiles, bricks and cement production or applications where speeds and loads result very high.

Zero Contact™ PRO is designed with different dimension and features, so to guarantee higher performance for hostile environments:

- The belt in Polyamide glass fiber reinforced, more resistant to high wear conditions
- The rods in stainless steel and fixed by using grub screws guarantee high loads

INNER RADIUS 586mm ÷ 1541mm
BELT WIDTH 249mm ÷ 1034mm
MATERIAL OF MODULES Polyamide glass fiber reinforced (PA)
COLOR OF MODULES Dark Pigeon Blue (RAL 5017)
PINS Stainless steel
PIN LOCK Stainless steel grub screws
FRAME Stainless steel

TEMPERATURE RANGE
Dry: -30°C÷100°C Wet: n.a.
(Dry:-22°F ÷ 212°F Wet: n.a.)
MAX. WORKING LOAD
19.000 N/m belt width
CURVE ANGLE 15° ÷ 360°
OPEN AREA 0%

CURVES RANGE
Angle 90°

Left Version **CS**

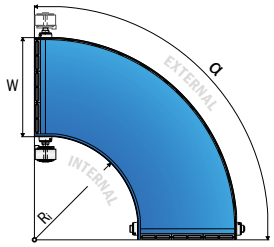

CD Right Version

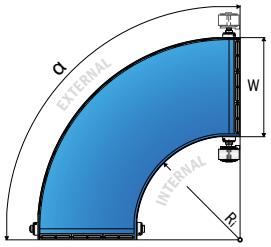

Width	Version	Ri 586mm	Ri 756mm	Ri 1011mm	Ri 1031mm	Ri 1116mm	Ri 1201mm	Ri 1286mm	Ri 1456mm	Ri 1541mm
249mm	RIGHT	-	-	-	W91R94G090-CD	-	-	W91R97G090-CD	-	-
	LEFT	-	-	-	W91R94G090-CS	-	-	W91R97G090-CS	-	-
269mm	RIGHT	-	W92R92G090-CD	W92R93G090-CD	-	-	-	-	-	-
	LEFT	-	W92R92G090-CS	W92R93G090-CS	-	-	-	-	-	-
419mm	RIGHT	-	-	-	W93R94G090-CD	-	W93R96G090-CD	-	W93R98G090-CD	-
	LEFT	-	-	-	W93R94G090-CS	-	W93R96G090-CS	-	W93R98G090-CS	-
439mm	RIGHT	W94R91G090-CD	W94R92G090-CD	W94R93G090-CD	-	-	-	-	-	-
	LEFT	W94R91G090-CS	W94R92G090-CS	W94R93G090-CS	-	-	-	-	-	-
504mm	RIGHT	-	-	-	-	W95R95G090-CD	-	W95R97G090-CD	-	W95R99G090-CD
	LEFT	-	-	-	-	W95R95G090-CS	-	W95R97G090-CS	-	W95R99G090-CS
524mm	RIGHT	W96R91G090-CD	W96R92G090-CD	W96R93G090-CD	-	-	-	-	-	-
	LEFT	W96R91G090-CS	W96R92G090-CS	W96R93G090-CS	-	-	-	-	-	-
864mm	RIGHT	W97R91G090-CD	W97R92G090-CD	W97R93G090-CD	-	-	-	-		
	LEFT	W97R91G090-CS	W97R92G090-CS	W97R93G090-CS	-	-	-	-		
1034mm	RIGHT	W98R91G090-CD	W98R92G090-CD	W98R93G090-CD	-	-	-	-		
	LEFT	W98R91G090-CS	W98R92G090-CS	W98R93G090-CS	-	-	-	-		

These codes mean complete curve, except floor supports and gearmotor, if you need to include them please see page 294/295.

CURVES RANGE
Angle 180°

Left Version **CS**

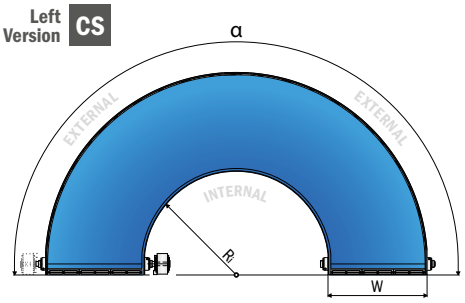

CD Right Version

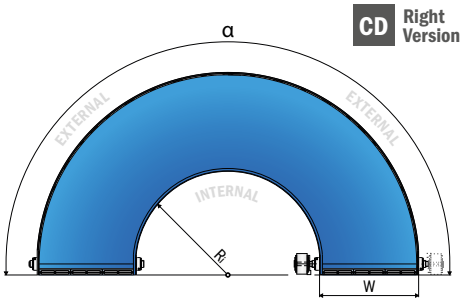

Width	Version	Ri 586mm	Ri 756mm	Ri 1011mm	Ri 1031mm	Ri 1116mm	Ri 1201mm	Ri 1286mm	Ri1456mm	Ri 1541mm
249mm	RIGHT	-	-	-	W91R94G180-CD	-	-	W91R97G180-CD	-	-
	LEFT	-	-	-	W91R94G180-CS	-	-	W91R97G180-CS	-	-
269mm	RIGHT	-	W92R92G180-CD	W92R93G180-CD	-	-	-	-	-	-
	LEFT	-	W92R92G180-CS	W92R93G180-CS	-	-	-	-	-	-
419mm	RIGHT	-	-	-	W93R94G180-CD	-	W93R96G180-CD	-	W93R98G180-CD	-
	LEFT	-	-	-	W93R94G180-CS	-	W93R96G180-CS	-	W93R98G180-CS	-
439mm	RIGHT	W94R91G180-CD	W94R92G180-CD	W94R93G180-CD	-	-	-	-	-	-
	LEFT	W94R91G180-CS	W94R92G180-CS	W94R93G180-CS	-	-	-	-	-	-
504mm	RIGHT	-	-	-	-	W95R95G180-CD	-	W95R97G180-CD	-	W95R99G180-CD
	LEFT	-	-	-	-	W95R95G180-CS	-	W95R97G180-CS	-	W95R99G180-CS
524mm	RIGHT	W96R91G180-CD	W96R92G180-CD	W96R93G180-CD	-	-	-	-	-	-
	LEFT	W96R91G180-CS	W96R92G180-CS	W96R93G180-CS	-	-	-	-	-	-
864mm	RIGHT	W97R91G180-CD	W97R92G180-CD	W97R93G180-CD	-	-	-	-		
	LEFT	W97R91G180-CS	W97R92G180-CS	W97R93G180-CS	-	-	-	-		
1034mm	RIGHT	W98R91G180-CD	W98R92G180-CD	W98R93G180-CD	-	-	-	-		
	LEFT	W98R91G180-CS	W98R92G180-CS	W98R93G180-CS	-	-	-	-		

These codes mean complete curve, except floor supports and gearmotor, if you need to include them please see page 294/295.

NEW

ZERO PRO CONTACT

CURVE CONVEYOR

TWO TRACKS VERSION

Product use

Zero Contact™ PRO is available also with **"two-tracks"** design; by keeping the same advantages of the **Zero Contact™ PRO**, with the **Zero Contact™ PRO "two tracks"** the maximum working load can be even higher thanks to the increased number of bearings.

Moreover, the two belts can work at different / independent speeds and can be activated independently thanks to the double shaft.

The two belts can also be used for goods acceleration or can be also stopped independently, in case there is a double track infeed conveyor.

Separate belts offers the possibility of different/ higher speeds

2 different bearing-tracks guarantee extreme load, even at higher speed

INNER RADIUS 586mm ÷ 1011mm
BELT WIDTH 524mm ÷ 1034mm
MATERIAL OF MODULES Polyamide glass fiber reinforced (PA)
COLOR OF MODULES Dark Pigeon Blue (RAL 5017)
PINS Stainless steel
PIN LOCK Stainless steel grub screws
FRAME Stainless steel

TEMPERATURE RANGE
Dry: -30°C÷100°C Wet: n.a.
(Dry:-22°F ÷ 212°F Wet: n.a.)
MAX. WORKING LOAD
21.000N/m belt width
CURVE ANGLE 15° ÷ 360°
OPEN AREA 0%

CURVES RANGE

Angle 90°

Double-Shaft

Left Version **CS**

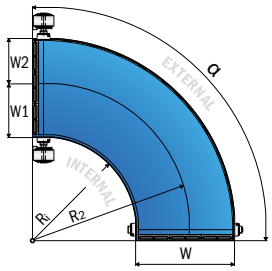

CD Right Version

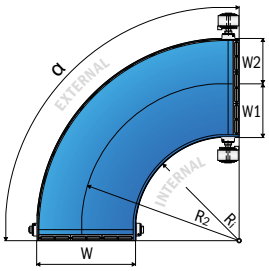

Width	Version	R_i 586mm	R_i 756mm	R_i 1011mm
524mm	RIGHT	-	W96R92G090-CD2	W96R93G090-CD2
	LEFT	-	W96R92G090-CS2	W96R93G090-CS2
864mm	RIGHT	W97R91G090-CD2	W97R92G090-CD2	W97R93G090-CD2
	LEFT	W97R91G090-CS2	W97R92G090-CS2	W97R93G090-CS2
1034mm	RIGHT	W98R91G090-CD2	W98R92G090-CD2	W98R93G090-CD2
	LEFT	W98R91G090-CS2	W98R92G090-CS2	W98R93G090-CS2

CODE	R1 - mm	W1 - mm	R2 - mm	W2 - mm	WTot - mm
W96R92G090-CD2 or CS2	756	269	1031	249	524
W96R93G090-CD2 or CS2	1011	269	1286	249	524
W97R91G090-CD2 or CS2	586	439	1031	419	864
W97R92G090-CD2 or CS2	756	439	1201	419	864
W97R93G090-CD2 or CS2	1011	439	1456	419	864
W98R91G090-CD2 or CS2	586	524	1116	504	1034
W98R92G090-CD2 or CS2	756	524	1286	504	1034
W98R93G090-CD2 or CS2	1011	524	1541	504	1034

The gap between the two belts is always 6mm. These codes mean complete curve, except floor supports and gearmotors, if you need to include them please see page 294/295.

CURVES RANGE

Angle 180°

Double-Shaft

Left Version **CS**

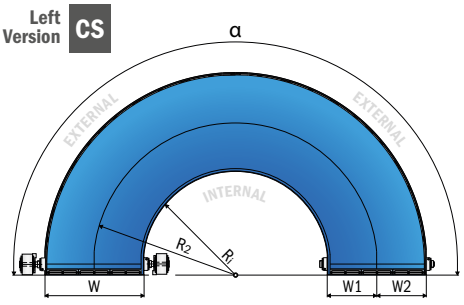

CD Right Version

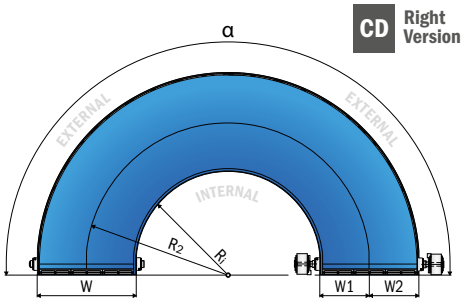

Width	Version	R_i 586mm	R_i 756mm	R_i 1011mm
524mm	RIGHT	-	W96R92G180-CD2	W96R93G180-CD2
	LEFT	-	W96R92G180-CS2	W96R93G180-CS2
864mm	RIGHT	W97R91G180-CD2	W97R92G180-CD2	W97R93G180-CD2
	LEFT	W97R91G180-CS2	W97R92G180-CS2	W97R93G180-CS2
1034mm	RIGHT	W98R91G180-CD2	W98R92G180-CD2	W98R93G180-CD2
	LEFT	W98R91G180-CS2	W98R92G180-CS2	W98R93G180-CS2

CODE	R1 - mm	W1 - mm	R2 - mm	W2 - mm	WTot - mm
W96R92G090-CD2 or CS2	756	269	1031	249	524
W96R93G090-CD2 or CS2	1011	269	1286	249	524
W97R91G090-CD2 or CS2	586	439	1031	419	864
W97R92G090-CD2 or CS2	756	439	1201	419	864
W97R93G090-CD2 or CS2	1011	439	1456	419	864
W98R91G090-CD2 or CS2	586	524	1116	504	1034
W98R92G090-CD2 or CS2	756	524	1286	504	1034
W98R93G090-CD2 or CS2	1011	524	1541	504	1034

The gap between the two belts is always 6mm. These codes mean complete curve, except floor supports and gearmotors, if you need to include them please see page 294/295.

NEW

ZERO 520 CONTACT S

CURVE CONVEYOR

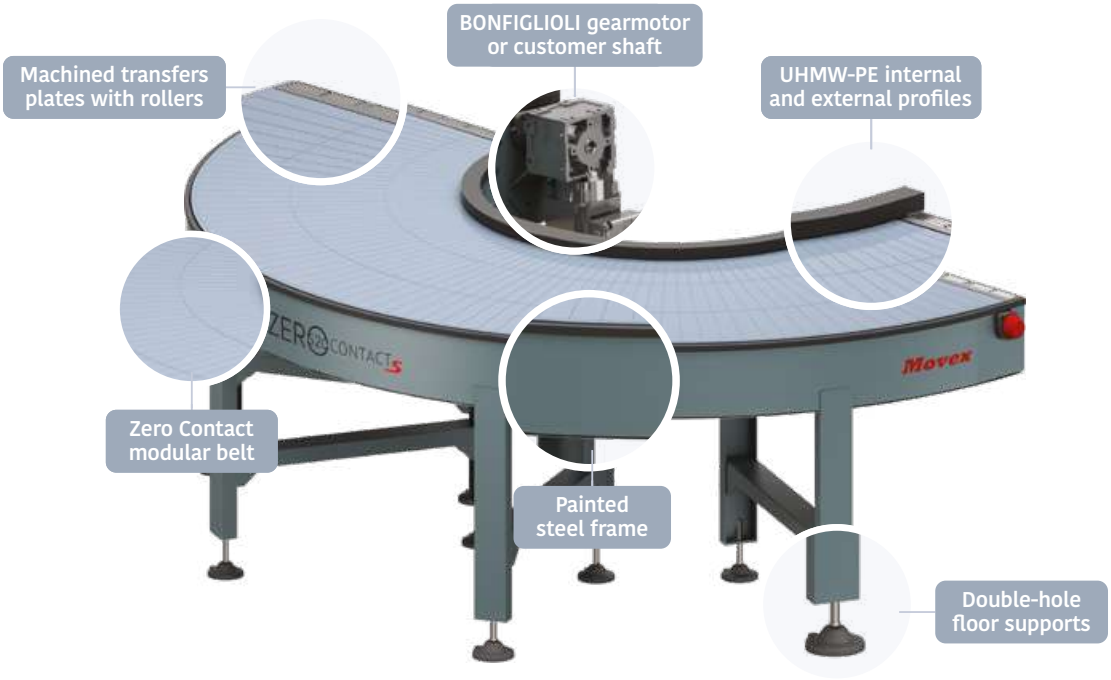

Product use

Zero Contact™ S is ideal for logistic / handling and distribution centers as well as can also be adopted for all types of product transportation, like wood or ceramic applications, dry conditions. Painted steel frames can be customized with every type of color.

Zero Contact™ S can be quickly installed into existing layout and fixed to the floor thanks to the leveling feet with double-floor fixation.

INNER RADIUS 600mm ÷ 2000mm
BELT WIDTH 200mm ÷ 1600mm
MATERIAL OF MODULES Acetal (POM)
COLOR OF MODULES Pigeon Blue (RAL 5014)
PINS PBT White
PIN LOCK Clips
FRAME Painted steel RAL 7031 or custom

TEMPERATURE RANGE
Dry: -40°C÷80°C Wet: n.a.
(Dry:-40°F ÷ 176°F Wet: n.a.)
MAX. WORKING LOAD
13.500 N/m belt width
CURVE ANGLE 15° ÷ 360°
OPEN AREA 0%

CURVES RANGE
Angle 90°

Left Version **CS**

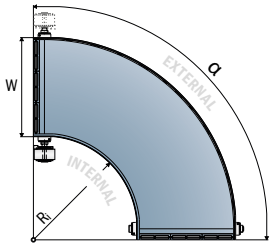

CD Right Version

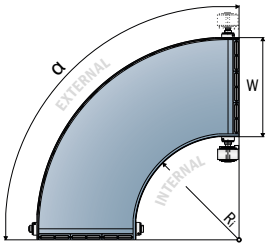

Width	Version	Ri 600mm	Ri 800mm	Ri 1000mm	Ri 1200mm	Ri 1400mm	Ri 1600mm	Ri 1800mm	Ri 2000mm
200mm	RIGHT	W02R06G090-CDS	W02R08G090-CDS	W02R10G090-CDS	W02R12G090-CDS	W02R14G090-CDS	W02R16G090-CDS	W02R18G090-CDS	W02R20G090-CDS
	LEFT	W02R06G090-CSS	W02R08G090-CSS	W02R10G090-CSS	W02R12G090-CSS	W02R14G090-CSS	W02R16G090-CSS	W02R18G090-CSS	W02R20G090-CSS
400mm	RIGHT	W04R06G090-CDS	W04R08G090-CDS	W04R10G090-CDS	W04R12G090-CDS	W04R14G090-CDS	W04R16G090-CDS	W04R18G090-CDS	-
	LEFT	W04R06G090-CSS	W04R08G090-CSS	W04R10G090-CSS	W04R12G090-CSS	W04R14G090-CSS	W04R16G090-CSS	W04R18G090-CSS	-
600mm	RIGHT	W06R06G090-CDS	W06R08G090-CDS	W06R10G090-CDS	W06R12G090-CDS	W06R14G090-CDS	W06R16G090-CDS	-	-
	LEFT	W06R06G090-CSS	W06R08G090-CSS	W06R10G090-CSS	W06R12G090-CSS	W06R14G090-CSS	W06R16G090-CSS	-	-
800mm	RIGHT	W08R06G090-CDS	W08R08G090-CDS	W08R10G090-CDS	W08R12G090-CDS	W08R14G090-CDS	-	-	-
	LEFT	W08R06G090-CSS	W08R08G090-CSS	W08R10G090-CSS	W08R12G090-CSS	W08R14G090-CSS	-	-	-
1000mm	RIGHT	W10R06G090-CDS	W10R08G090-CDS	W10R10G090-CDS	W10R12G090-CDS	-	-	-	-
	LEFT	W10R06G090-CSS	W10R08G090-CSS	W10R10G090-CSS	W10R12G090-CSS	-	-	-	-
1200mm	RIGHT	W12R06G090-CDS	W12R08G090-CDS	W12R10G090-CDS	-	-	-	-	-
	LEFT	W12R06G090-CSS	W12R08G090-CSS	W12R10G090-CSS	-	-	-		
1400mm	RIGHT	W14R06G090-CDS	W14R08G090-CDS	-	-	-	-		
	LEFT	W14R06G090-CSS	W14R08G090-CSS	-	-	-	-		
1600mm	RIGHT	W16R06G090-CDS	-	-	-	-	-		
	LEFT	W16R06G090-CSS	-	-	-	-	-		

These codes mean complete curve, except floor supports and gearmotor, if you need to include them please see page 294/295.

CURVES RANGE
Angle 180°

Left Version **CS**

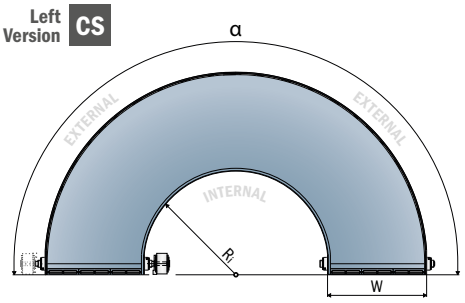

CD Right Version

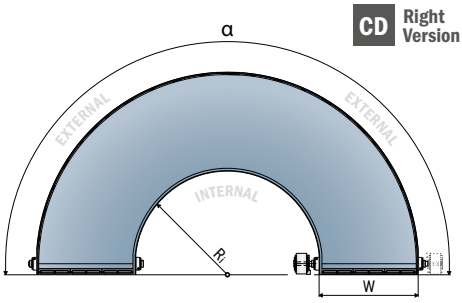

Width	Version	Ri 600mm	Ri 800mm	Ri 1000mm	Ri 1200mm	Ri 1400mm	Ri 1600mm	Ri 1800mm	Ri 2000mm
200mm	RIGHT	W02R06G180-CDS	W02R08G180-CDS	W02R10G180-CDS	W02R12G180-CDS	W02R14G180-CDS	W02R16G180-CDS	W02R18G180-CDS	W02R20G180-CDS
	LEFT	W02R06G180-CSS	W02R08G180-CSS	W02R10G180-CSS	W02R12G180-CSS	W02R14G180-CSS	W02R16G180-CSS	W02R18G180-CSS	W02R20G180-CSS
400mm	RIGHT	W04R06G180-CDS	W04R08G180-CDS	W04R10G180-CDS	W04R12G180-CDS	W04R14G180-CDS	W04R16G180-CDS	W04R18G180-CDS	-
	LEFT	W04R06G180-CSS	W04R08G180-CSS	W04R10G180-CSS	W04R12G180-CSS	W04R14G180-CSS	W04R16G180-CSS	W04R18G180-CSS	-
600mm	RIGHT	W06R06G180-CDS	W06R08G180-CDS	W06R10G180-CDS	W06R12G180-CDS	W06R14G180-CDS	W06R16G180-CDS	-	-
	LEFT	W06R06G180-CSS	W06R08G180-CSS	W06R10G180-CSS	W06R12G180-CSS	W06R14G180-CSS	W06R16G180-CSS	-	-
800mm	RIGHT	W08R06G180-CDS	W08R08G180-CDS	W08R10G180-CDS	W08R12G180-CDS	W08R14G180-CDS	-	-	-
	LEFT	W08R06G180-CSS	W08R08G180-CSS	W08R10G180-CSS	W08R12G180-CSS	W08R14G180-CSS	-	-	-
1000mm	RIGHT	W10R06G180-CDS	W10R08G180-CDS	W10R10G180-CDS	W10R12G180-CDS	-	-	-	-
	LEFT	W10R06G180-CSS	W10R08G180-CSS	W10R10G180-CSS	W10R12G180-CSS	-	-	-	-
1200mm	RIGHT	W12R06G180-CDS	W12R08G180-CDS	W12R10G180-CDS	-	-	-	-	-
	LEFT	W12R06G180-CSS	W12R08G180-CSS	W12R10G180-CSS	-	-	-	-	-
1400mm	RIGHT	W14R06G180-CDS	W14R08G180-CDS	-	-	-	-		
	LEFT	W14R06G180-CSS	W14R08G180-CSS	-	-	-	-		
1600mm	RIGHT	W16R06G180-CDS	-	-	-	-	-		
	LEFT	W16R06G180-CSS	-	-	-	-	-		

These codes mean complete curve, except floor supports and gearmotor, if you need to include them please see page 294/295.

Zero Contact™

Floor support

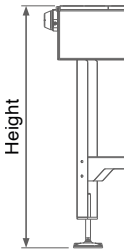

- Stainless steel AISI 304 or painted steel
- Single or double floor fixation levellers
- Customizable height and specifications

Floor support *for Zero Contact*

Article Nr.	Curve Width - mm	Total Height - mm	Angle
W02G090H	200	1000	90°
W04G090H	400	1000	90°
W06G090H	600	1000	90°
W08G090H	800	1000	90°
W10G090H	1000	1000	90°
W12G090H	1200	1000	90°
W14G090H	1400	1000	90°
W16G090H	1600	1000	90°

Article Nr.	Curve Width - mm	Total Height - mm	Angle
W02G180H	200	1000	180°
W04G180H	400	1000	180°
W06G180H	600	1000	180°
W08G180H	800	1000	180°
W10G180H	1000	1000	180°
W12G180H	1200	1000	180°
W14G180H	1400	1000	180°
W16G180H	1600	1000	180°

Floor support *for Zero Contact PRO*

Article Nr.	Curve Width - mm	Total Height - mm	Angle
W91G090H	249	1000	90°
W92G090H	269	1000	90°
W93G090H	419	1000	90°
W94G090H	439	1000	90°
W95G090H	504	1000	90°
W96G090H	524	1000	90°
W97G090H	864	1000	90°
W98G090H	1034	1000	90°

Article Nr.	Curve Width - mm	Total Height - mm	Angle
W91G180H	249	1000	180°
W92G180H	269	1000	180°
W93G180H	419	1000	180°
W94G180H	439	1000	180°
W95G180H	504	1000	180°
W96G180H	524	1000	180°
W97G180H	864	1000	180°
W98G180H	1034	1000	180°

Floor support *for Zero Contact S*

Article Nr.	Curve Width - mm	Total Height - mm	Angle
W02G090HS	200	1000	90°
W04G090HS	400	1000	90°
W06G090HS	600	1000	90°
W08G090HS	800	1000	90°
W10G090HS	1000	1000	90°
W12G090HS	1200	1000	90°
W14G090HS	1400	1000	90°
W16G090HS	1600	1000	90°

Article Nr.	Curve Width - mm	Total Height - mm	Angle
W02G180HS	200	1000	180°
W04G180HS	400	1000	180°
W06G180HS	600	1000	180°
W08G180HS	800	1000	180°
W10G180HS	1000	1000	180°
W12G180HS	1200	1000	180°
W14G180HS	1400	1000	180°
W16G180HS	1600	1000	180°

For different heights or custom specification please contact your sales representative.

Zero Contact™

Gearmotor

SEW Gearmotors

- Foodgrade oil
- Power for 90° curve > 0,37kW – type WA30 DRN71M4
- Power for 180° curve > 0,55kW – type WA30 DRN80MK4
- Internal shaft position (no cable supplied)

Article Nr.	Power
M090-S/I	for 90° curve
M180-S/I	for 180° curve

Recommended for ***Zero Contact™*** and ***Zero Contact™ PRO***
For different gearmotors please contact your sales representative

BONFIGLIOLI Gearmotors

- Power for 90° curve > 0,37kW – type BN 71B 4 B14 KW 0,37
- Power for 180° curve > 0,55kW – type BN 71C 4 B14 KW 0,55
- Internal shaft position (no cable supplied)

Article Nr.	Power
M090L-S/I	for 90° curve
M180L-S/I	for 180° curve

Recommended for ***Zero Contact™ S***
For different gearmotors please contact your sales representative

SEW and BONFIGLIOLI are believed to be the trademarks and/or trade names of their respective owners and are not owned or controlled by Movex S.p.A.

NEW

ZERO 510 ATP

ACTIVE TRANSFER PLATE

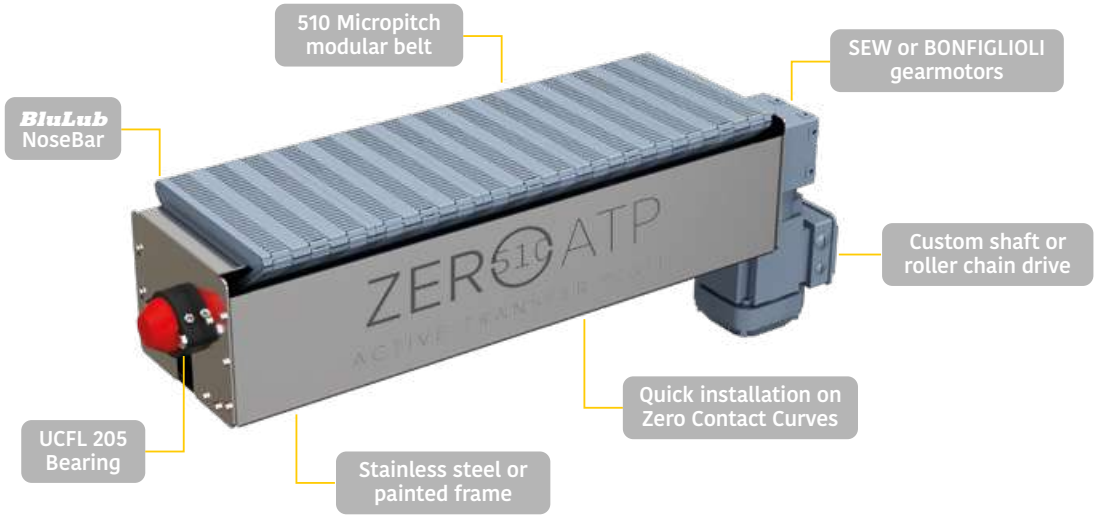

The **Zero ATP** is the perfect solution for small and light products, which hardly slide on standard solution. With the Active Transfer Plate Movex helps reducing downtimes and improving efficiency.

Zero ATP is a complete conveyor unit and supplied connected to the **Zero Contact** ™ curve independently, so speed can be different than the curve itself, so able to accelerate or decelerate carried products.

Zero ATP Active Transfer Plates are equipped with Movex 510 FT micropitch belt.

A tensioning system is included.

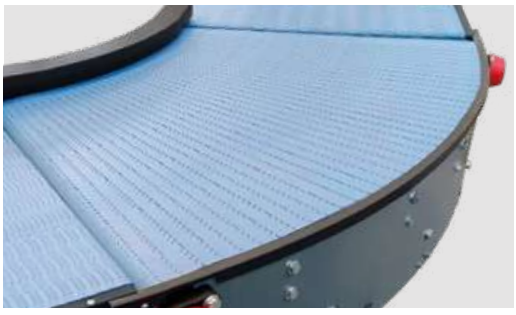

Main features

- Equipped with Movex 510 modular belt
- 8mm pitch, 3mm nose radius
- Available length 250mm and 500mm
- Connectable to Zero Contact curves

Longer Zero ATP available on request

Zero ATP for Zero Contact

Module length 250mm

Article Nr.	Curve Width - mm	Micropitch Width - mm
W02L10ATP	200	228,6
W04L10ATP	400	381
W06L10ATP	600	609,6
W08L10ATP	800	838,2
W10L10ATP	1000	990,6
W12L10ATP	1200	1219,2
W14L10ATP	1400	1447,8
W16L10ATP	1600	1600,2

Module length 500mm

Article Nr.	Curve Width - mm	Micropitch Width - mm
W02L20ATP	200	228,6
W04L20ATP	400	381
W06L20ATP	600	609,6
W08L20ATP	800	838,2
W10L20ATP	1000	990,6
W12L20ATP	1200	1219,2
W14L20ATP	1400	1447,8
W16L20ATP	1600	1600,2

Zero ATP for Zero Contact PRO

Module length 250mm

Article Nr.	Curve Width - mm	Micropitch Width - mm
W91L10ATP	249	228,6
W92L10ATP	269	228,6
W93L10ATP	419	381
W94L10ATP	439	457,2
W95L10ATP	504	533,4
W96L10ATP	524	533,4
W97L10ATP	864	838,2
W98L10ATP	1034	990,6

Module length 500mm

Article Nr.	Curve Width - mm	Micropitch Width - mm
W91L20ATP	249	228,6
W92L20ATP	269	228,6
W93L20ATP	419	381
W94L20ATP	439	457,2
W95L20ATP	504	533,4
W96L20ATP	524	533,4
W97L20ATP	864	838,2
W98L20ATP	1034	990,6

Zero ATP for Zero Contact S

Module length 250mm

Article Nr.	Curve Width - mm	Micropitch Width - mm
W02L10ATPS	200	228,6
W04L10ATPS	400	381
W06L10ATPS	600	609,6
W08L10ATPS	800	838,2
W10L10ATPS	1000	990,6
W12L10ATPS	1200	1219,2
W14L10ATPS	1400	1447,8
W16L10ATPS	1600	1600,2

Module length 500mm

Article Nr.	Curve Width - mm	Micropitch Width - mm
W02L20ATPS	200	228,6
W04L20ATPS	400	381
W06L20ATPS	600	609,6
W08L20ATPS	800	838,2
W10L20ATPS	1000	990,6
W12L20ATPS	1200	1219,2
W14L20ATPS	1400	1447,8
W16L20ATPS	1600	1600,2

SEW Gearmotor

- Foodgrade oil
- Power 0,18kW

Article Nr.	Power
MDT-1600	0,18kW

BONFIGLIOLI Gearmotor

- Power 0,18kW

Article Nr.	Power
MDTL-1600	0,18kW

For different gearmotors please contact your sales representative.

SEW and BONFIGLIOLI are believed to be the trademarks and/or trade names of their respective owners and are not owned or controlled by Movex S.p.A.

PATENTED

NEW

100% GUARANTEED TRANSFER!

ZERO PRO ATP

ACTIVE TRANSFER PLATE

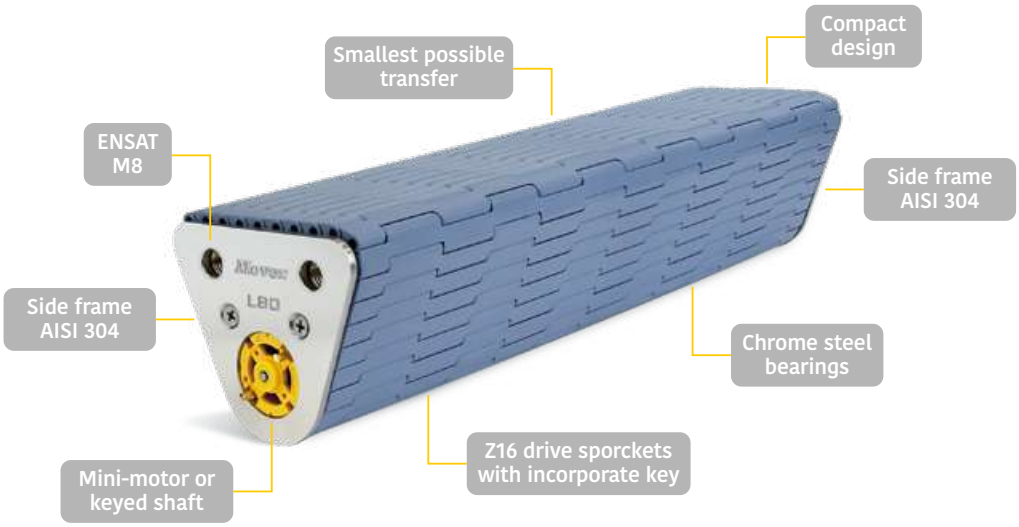

Product use

Zero ATP™ Pro equipped with micro-pitch 510 modular belt series, is the smallest Active Transfer Plate available on the market.

With its revolutionary compact shape, **Zero ATP™ Pro** is the right choice to connect different conveyors, guaranteeing a smooth product transfer, that can be easily integrated into existing lines by replacing traditional transfers, with limited structural work.

Zero ATP™ Pro can be provided with mini-motor or key shaft for a roller chain drive and it's a maintenance and tensioning free system.

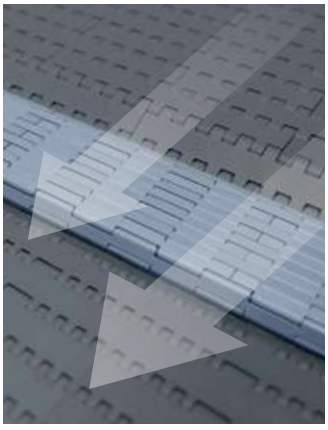

BELT SERIES 510 FT
BELT WIDTH 6in ÷ 24in (152,4mm ÷ 609,6mm)
BELT DIMENSIONS Pitch 8mm Thickness 6mm
MATERIAL OF MODULES LFA, MX and LFB
TRANSFER LENGTH 80mm or 150mm
TRANSMISSION Mini motor or Keyed shaft
MAX. WORKING LOAD 3.000 N/m belt width

SIMULTANEOUS TRANSPORT OF:

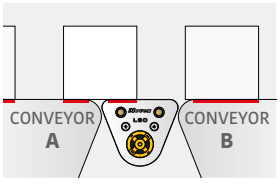

LIGHTWEIGHT & SMALL GOODS

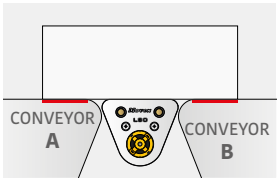

HIGH LOAD & BIG GOODS

Plug-in & Play solution | Maintenance free | Self-tensioning

Zero ATP™ Pro

Mini motor version

Mini-motor version

Includes a mini-motor assembled at the inside of the module.
Optional cover for motor connection
Article-Nr. 300601

Mini-motor features:
Supply voltage 6-15 V dc | Power Rating 7.85W
Max Torque 6539 g.cm.

Transfer length 80mm

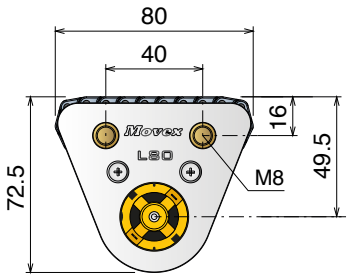

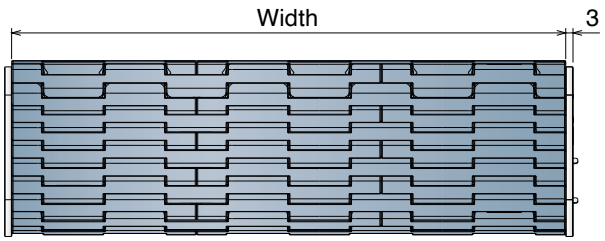

Series	Material	Width	Version
5336	*	0006	A
5336	*	0009	A
5336	*	0012	A
5336	*	0015	A
5336	*	0018	A
5336	*	0021	A
5336	*	0024	A

***Material**

LFA - Code 01 *Low friction Acetal*		MX - Code 03 *Performance PBT*		LFB - Code 23 *Low friction Acetal*	
Max w. load:	3000 N	**Max w. load:**	2700 N	**Max w. load:**	3000 N
Weight:	5,8 kg/m²	**Weight:**	5,5 kg/m²	**Weight:**	5,8 kg/m²
Temp. range dry:	-40÷80 °C	**Temp. range dry:**	-40÷120 °C	**Temp. range dry:**	-40÷80 °C
Temp. range wet:	-40÷65 °C	**Temp. range wet:**	-40÷60 °C	**Temp. range wet:**	-40÷65 °C
Pin material:	PBT white	**Pin material:**	POM grey	**Pin material:**	PBT white

Transfer length 150mm

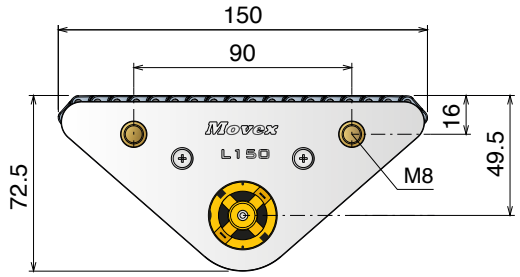

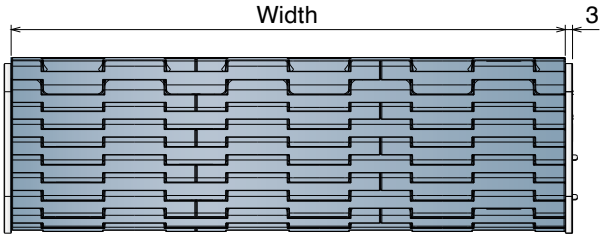

Series	Material	Width	Version
5338	*	0006	A
5338	*	0009	A
5338	*	0012	A
5338	*	0015	A
5338	*	0018	A
5338	*	0021	A
5338	*	0024	A

***Material**

LFA - Code 01 *Low friction Acetal*		MX - Code 03 *Performance PBT*		LFB - Code 23 *Low friction Acetal*	
Max w. load:	3000 N	**Max w. load:**	2700 N	**Max w. load:**	3000 N
Weight:	5,8 kg/m²	**Weight:**	5,5 kg/m²	**Weight:**	5,8 kg/m²
Temp. range dry:	-40÷80 °C	**Temp. range dry:**	-40÷120 °C	**Temp. range dry:**	-40÷80 °C
Temp. range wet:	-40÷65 °C	**Temp. range wet:**	-40÷60 °C	**Temp. range wet:**	-40÷65 °C
Pin material:	PBT white	**Pin material:**	POM grey	**Pin material:**	PBT white

For different configurations please contact your sales representative.

Zero ATP™ Pro

Keyed shaft version

Keyed shaft version

Includes a 15 mm shaft with standard key seat 5x5 for roller chain transmission.

Transfer length 80mm

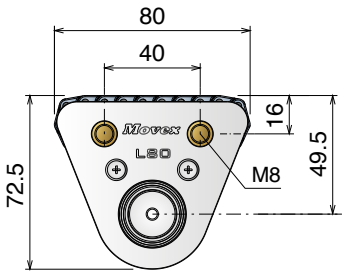

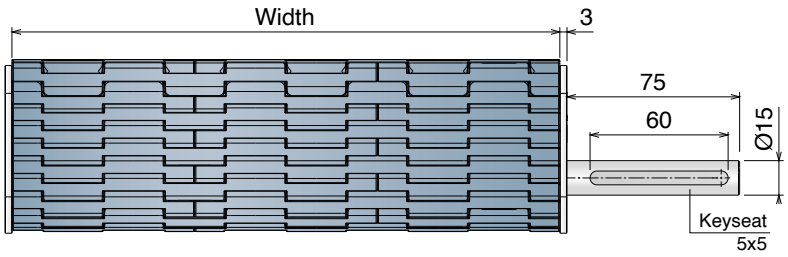

Series	Material	Width	Version
5336	*	0006	B
5336	*	0009	B
5336	*	0012	B
5336	*	0015	B
5336	*	0018	B
5336	*	0021	B
5336	*	0024	B

***Material**

LFA - Code 01 *Low friction Acetal*		MX - Code 03 *Performance PBT*		LFB - Code 23 *Low friction Acetal*	
Max w. load:	3000 N	**Max w. load:**	2700 N	**Max w. load:**	3000 N
Weight:	5,8 kg/m²	**Weight:**	5,5 kg/m²	**Weight:**	5,8 kg/m²
Temp. range dry:	-40÷80 °C	**Temp. range dry:**	-40÷120 °C	**Temp. range dry:**	-40÷80 °C
Temp. range wet:	-40÷65 °C	**Temp. range wet:**	-40÷60 °C	**Temp. range wet:**	-40÷65 °C
Pin material:	PBT white	**Pin material:**	POM grey	**Pin material:**	PBT white

Transfer length 150mm

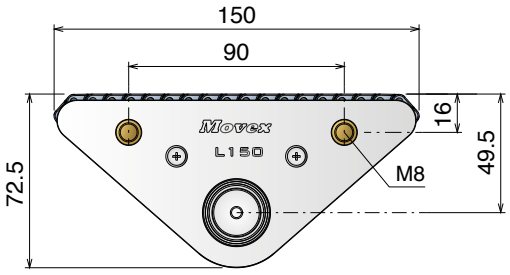

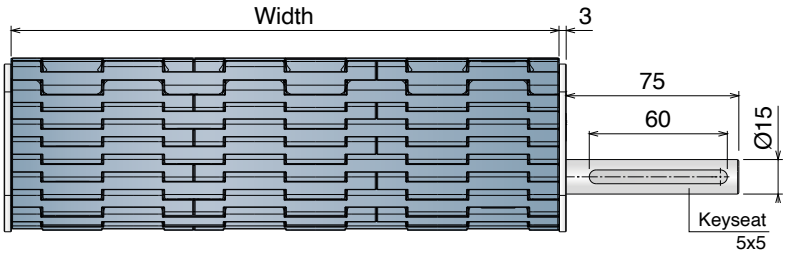

Series	Material	Width	Version
5338	*	0006	B
5338	*	0009	B
5338	*	0012	B
5338	*	0015	B
5338	*	0018	B
5338	*	0021	B
5338	*	0024	B

***Material**

LFA - Code 01 *Low friction Acetal*		MX - Code 03 *Performance PBT*		LFB - Code 23 *Low friction Acetal*	
Max w. load:	3000 N	**Max w. load:**	2700 N	**Max w. load:**	3000 N
Weight:	5,8 kg/m²	**Weight:**	5,5 kg/m²	**Weight:**	5,8 kg/m²
Temp. range dry:	-40÷80 °C	**Temp. range dry:**	-40÷120 °C	**Temp. range dry:**	-40÷80 °C
Temp. range wet:	-40÷65 °C	**Temp. range wet:**	-40÷60 °C	**Temp. range wet:**	-40÷65 °C
Pin material:	PBT white	**Pin material:**	POM grey	**Pin material:**	PBT white

For different configurations please contact your sales representative.

NEW

553 SORTER+

MULTIDIRECTIONAL CONVEYOR

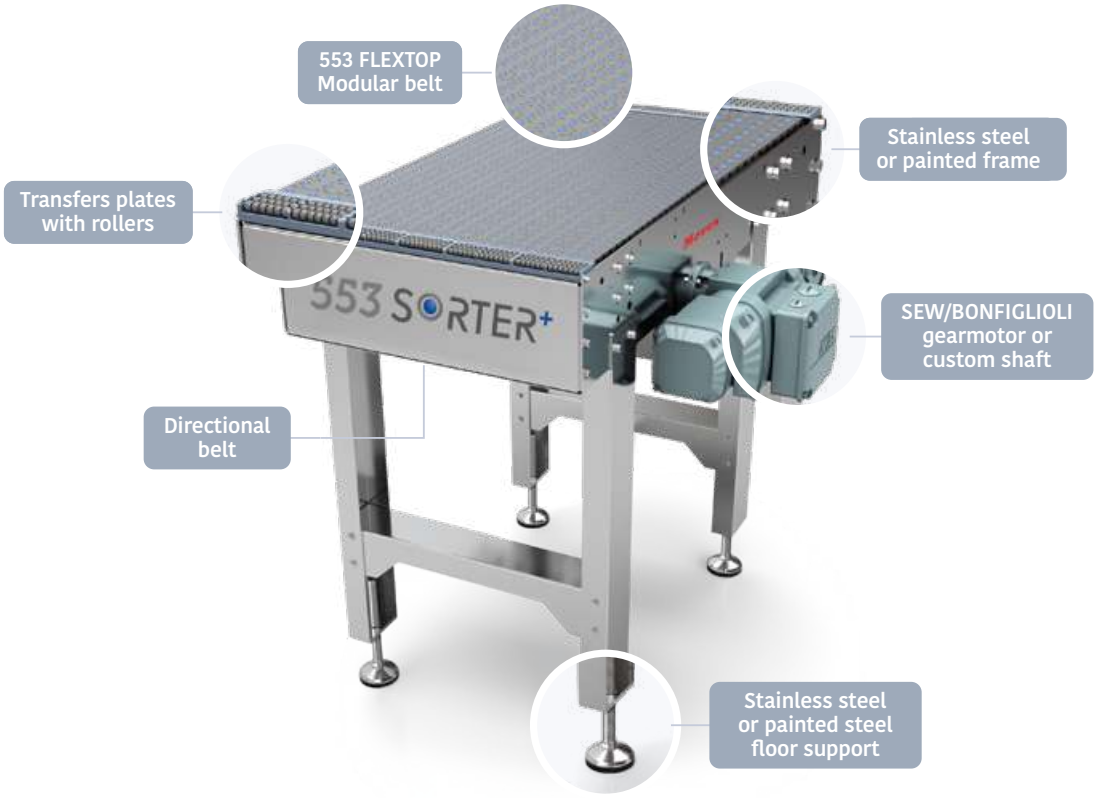

Product use

The **553 Sorter plus™** is a multidirectional conveyor, equipped with the unique and patented 553 FlexTop modular belt, and with directional belt or plate, is able to handle a variety of products at 360°.

The **553 Sorter plus™** is available in different widths and lengths and in 4 different versions:

- **Diverter** - able to quickly move side to side your goods
- **Dynamic Turn** - able to rotate dynamically your goods
- **Static Turn** - able to rotate statically your goods
- **Speed** - able to accelerate/decelerate your goods

BELT PITCH: 25,4 mm
THICKNESS: 8,7 mm
INCREMENTS: 76,2 mm
TOTAL LENGTH: 600mm ÷ 1400mm
TOTAL WIDTH: 390mm ÷ 1000mm
MATERIAL OF MODULES: Dark grey acetal (POM)
MATERIAL OF SPHERES: Blue Polyamide (PA)

TEMPERATURE RANGE
Dry: -40°C÷80°C Wet: n.a.
(Dry:-40°F ÷ 176°F Wet: n.a.)
MAX. WORKING LOAD
27.500 N/m belt width
OPEN AREA 0%
FRAME Stainless steel or Painted steel

553 Sorter+
Diverter

Equipped with one directional belt underneath the 553 FlexTop belt running at transversal direction, the Sorter plus - diverter will let your products moving to the left or to the right.

This configuration is ideal for many types of applications, like distribution systems and logistics centers and can be used with many different types of packages, from the most traditional ones like cardboard boxes to polybags and paper envelopes.

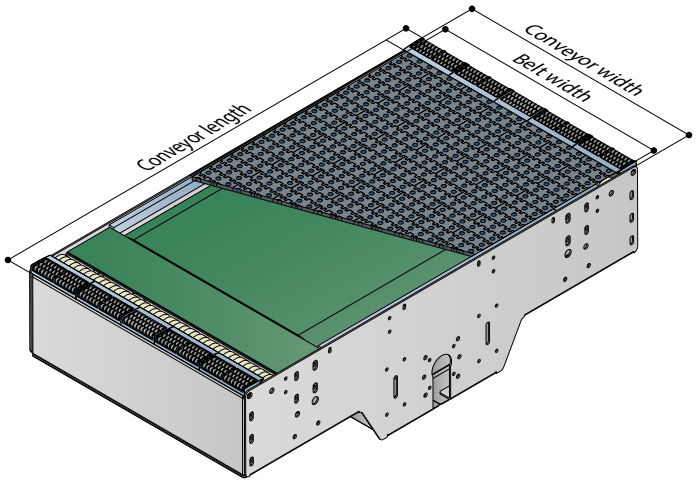

Conveyor Width	Belt Width	Conveyor Length				
		600mm	800mm	1000mm	1200mm	1400mm
390mm	381mm	W0390L0600-D	W0390L0800-D	-	-	-
470mm	457,2mm	W0470L0600-D	W0470L0800-D	W0470L1000-D	-	-
545mm	533,4mm	W0545L0600-D	W0545L0800-D	W0545L1000-D	-	-
620mm	609,6mm	-	W0620L0800-D	W0620L1000-D	W0620L1200-D	-
695mm	685,8mm	-	W0695L0800-D	W0695L1000-D	W0695L1200-D	-
770mm	762mm	-	W0770L0800-D	W0770L1000-D	W0770L1200-D	-
850mm	838,2mm	-	-	W0850L1000-D	W0850L1200-D	W0850L1400-D
925mm	914,4mm	-	-	W0925L1000-D	W0925L1200-D	W0925L1400-D
1000mm	990,6mm	-	-	-	W1000L1200-D	W1000L1400-D

These codes mean complete stainless steel conveyor, except floor supports and gearmotor, if you need to include them please see page 305.
For painted steel versions just add "**S**" at the end of the Article-Nr.

Conveyor Length	Directional belt Width	Available exit Width
600mm	400mm	400
800mm	600mm	400 - 600
1000mm	800mm	400 - 600 - 800
1200mm	1000mm	600 - 800 - 1000
1400mm	1200mm	800 - 1000 - 1200

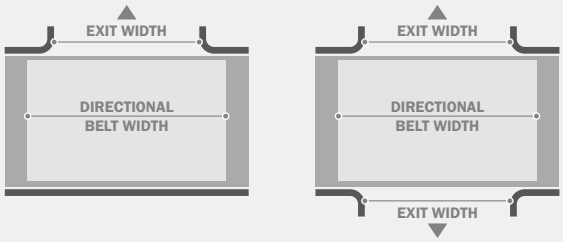

Straight exit

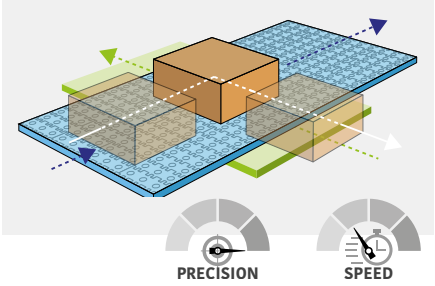

To get a completely straight exit, **the directional belt must be activated when 553 FlexTop is not running**.

Inclined exit

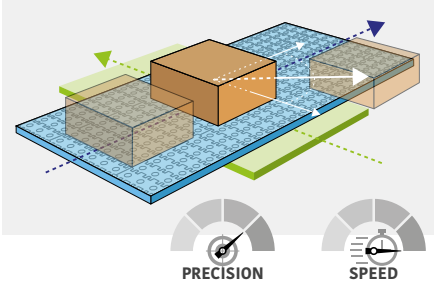

To get a 45° inclined direction, the **speed of the directional belt must be the same** as the speed of the 553 FlexTop and they have to work contemporary.

Curved exit

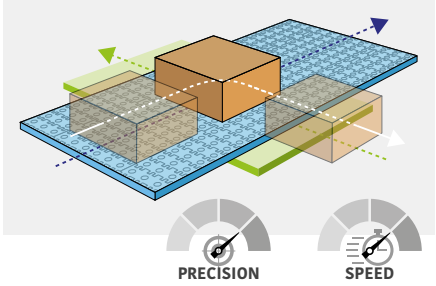

To get a straight exit without loosing relatively too much time, the **directional belt can be activated** also **when the 553 FlexTop is running, while is reducing speed**.
The combination of the two speeds will determine the exit curve dimension.

Oadby Core product range
Oadby Available from stock in Leicester
Easy Available from stock in Italy
Standard Produced to order in Italy
Movex

553 Sorter+

Dynamic turn

Equipped with two directional belts underneath the 553 FlexTop belt running at opposite direction, the Sorter plus - dynamic turn will let your products start rotating.

This configuration is ideal to turn products in high-speed production lines that can be handled without stopping the 553 FlexTop belt.

The distance of the rotation depends by the combination of the 3 different speeds.

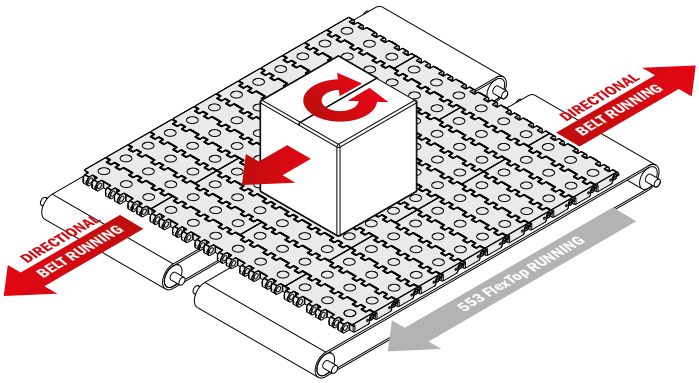

These codes mean complete stainless steel conveyor, except floor supports and gearmotor, if you need to include them please see page 305.

For painted steel versions just add "**S**" at the end of the Article-Nr.

Conveyor Width	Belt Width	Conveyor Length				
		600mm	800mm	1000mm	1200mm	1400mm
390mm	381mm	W0390L0600-DT	W0390L0800-DT	-	-	-
470mm	457,2mm	W0470L0600-DT	W0470L0800-DT	W0470L1000-DT	-	-
545mm	533,4mm	W0545L0600-DT	W0545L0800-DT	W0545L1000-DT	-	-
620mm	609,6mm	-	W0620L0800-DT	W0620L1000-DT	W0620L1200-DT	-
695mm	685,8mm	-	W0695L0800-DT	W0695L1000-DT	W0695L1200-DT	-
770mm	762mm	-	W0770L0800-DT	W0770L1000-DT	W0770L1200-DT	-
850mm	838,2mm	-	-	W0850L1000-DT	W0850L1200-DT	W0850L1400-DT
925mm	914,4mm	-	-	W0925L1000-DT	W0925L1200-DT	W0925L1400-DT
1000mm	990,6mm	-	-	-	W1000L1200-DT	W1000L1400-DT

553 Sorter+

Static turn

Equipped with one rotating plate underneath the 553 FlexTop belt, the Sorter plus - static turn will let your products start rotating.

This configuration is ideal to turn products with high-precision and they have to be handled while the 553 FlexTop belt is not running.

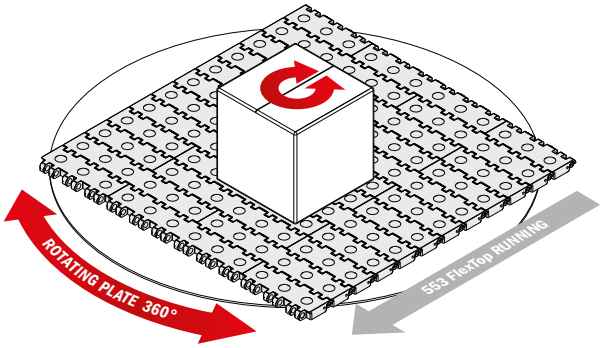

These codes mean complete stainless steel conveyor, except floor supports and gearmotor, if you need to include them please see page 305.

For painted steel versions just add "**S**" at the end of the Article-Nr.

Conveyor Width	Belt Width	Conveyor Length				
		600mm	800mm	1000mm	1200mm	1400mm
390mm	381mm	W0390L0600-ST	W0390L0800-ST	-	-	-
470mm	457,2mm	W0470L0600-ST	W0470L0800-ST	W0470L1000-ST	-	-
545mm	533,4mm	W0545L0600-ST	W0545L0800-ST	W0545L1000-ST	-	-
620mm	609,6mm	-	W0620L0800-ST	W0620L1000-ST	W0620L1200-ST	-
695mm	685,8mm	-	W0695L0800-ST	W0695L1000-ST	W0695L1200-ST	-
770mm	762mm	-	W0770L0800-ST	W0770L1000-ST	W0770L1200-ST	-
850mm	838,2mm	-	-	W0850L1000-ST	W0850L1200-ST	W0850L1400-ST
925mm	914,4mm	-	-	W0925L1000-ST	W0925L1200-ST	W0925L1400-ST
1000mm	990,6mm	-	-	-	W1000L1200-ST	W1000L1400-ST

PATENTED

For different configuration please contact your sales representative.

553 Sorter+
Speed

Equipped with one directional belt underneath the 553 FlexTop belt running at same or opposite direction of the 553 FlexTop belt, the Sorter plus speed can accelerate or decelerate your products.

This configuration is ideal to space your products without the need of having an additional conveyor.

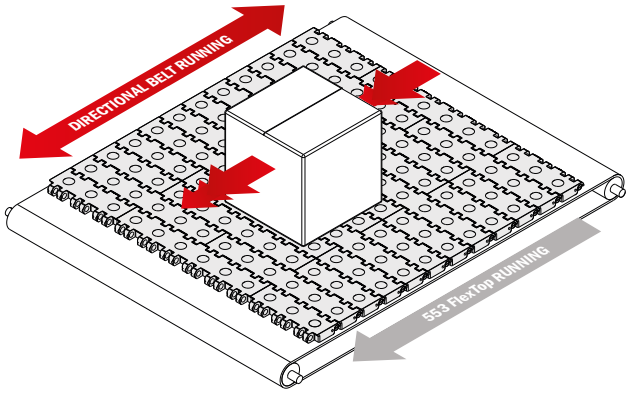

These codes mean complete stainless steel conveyor, except floor supports and gearmotor, if you need to include them please see page 305.

For painted steel versions just add "**S**" at the end of the Article-Nr.

Conveyor Width	Belt Width	Conveyor Length				
		600mm	800mm	1000mm	1200mm	1400mm
390mm	381mm	W0390L0600-S	W0390L0800-S	-	-	-
470mm	457,2mm	W0470L0600-S	W0470L0800-S	W0470L1000-S	-	-
545mm	533,4mm	W0545L0600-S	W0545L0800-S	W0545L1000-S	-	-
620mm	609,6mm	-	W0620L0800-S	W0620L1000-S	W0620L1200-S	-
695mm	685,8mm	-	W0695L0800-S	W0695L1000-S	W0695L1200-S	-
770mm	762mm	-	W0770L0800-S	W0770L1000-S	W0770L1200-S	-
850mm	838,2mm	-	-	W0850L1000-S	W0850L1200-S	W0850L1400-S
925mm	914,4mm	-	-	W0925L1000-S	W0925L1200-S	W0925L1400-S
1000mm	990,6mm	-	-	-	W1000L1200-S	W1000L1400-S

553 Sorter+

Floor support

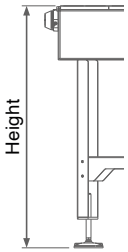

- Stainless steel AISI 304 or painted steel
- Single or double floor fixation levellers
- Customizable height and specifications

Article Nr.	Conveyor Width - mm	Total Height - mm
W0390H	390	1000
W0470H	470	1000
W0545H	545	1000
W0620H	620	1000
W0695H	695	1000
W0770H	770	1000
W0850H	850	1000
W0925H	925	1000
W1000H	1000	1000

For different heights or custom specification please contact your sales representative.
For painted steel versions, just add "**S**" at the end of the Article-Nr.

553 Sorter+

Gearmotor

SEW Gearmotors

- Foodgrade oil
- Power 0,37kW – type WA30 DRN71M4
- Internal shaft position (no cable supplied)

Article Nr.	Power
M090-S/I	0,37kW

BONFIGLIOLI Gearmotors

- Power 0,37kW – type WA30 DRN71M4
- Internal shaft position (no cable supplied)

Article Nr.	Power
M090L-S/I	0,37kW

For different gearmotors please contact your sales representative

SEW and BONFIGLIOLI are believed to be the trademarks and/or trade names of their respective owners and are not owned or controlled by Movex S.p.A.

553 Sorter+

Photocells

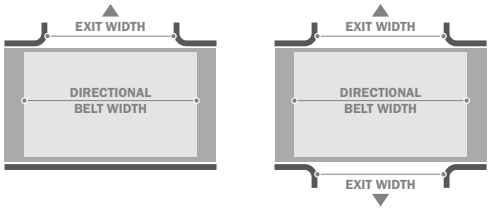

Conveyor Length	Directional belt Width	Available exit Width	Photocells Single exit	Photocells Double exit
600mm	400mm	400mm	L0600-SE0400	L0600-DE0400
800mm	600mm	400mm	L0800-SE0400	L0800-DE0400
		600mm	L0800-SE0600	L0800-DE0600
1000mm	800mm	400mm	L1000-SE0400	L1000-DE0400
		600mm	L1000-SE0600	L1000-DE0600
		800mm	L1000-SE0800	L1000-DE0800
1200mm	1000mm	600mm	L1200-SE0600	L1200-DE0600
		800mm	L1200-SE0800	L1200-DE0800
		1000mm	L1200-SE1000	L1200-DE1000
1400mm	1200mm	800mm	L1400-SE0800	L1400-DE0800
		1000mm	L1400-SE1000	L1400-DE1000
		1200mm	L1400-SE1200	L1400-DE1200

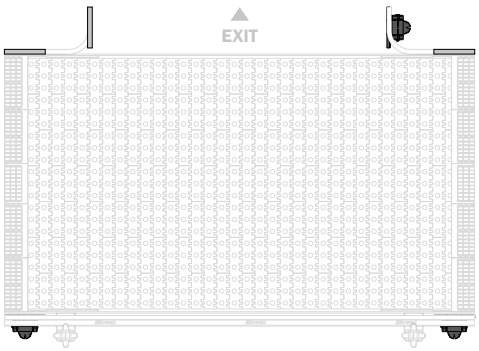

Configuration for single exit option.

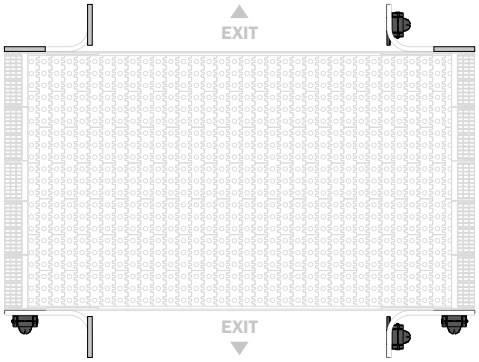

Configuration for double exit option.

553 Sorter+

Photocells and BluLub® guides

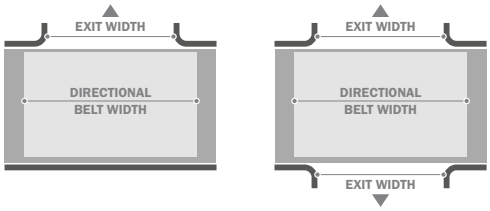

Conveyor Length	Directional belt Width	Available exit Width	Photocells/guides Single exit	Photocells/guides Double exit
600mm	400mm	400mm	L0600-SE0400K	L0600-DE0400K
800mm	600mm	400mm	L0800-SE0400K	L0800-DE0400K
		600mm	L0800-SE0600K	L0800-DE0600K
1000mm	800mm	400mm	L1000-SE0400K	L1000-DE0400K
		600mm	L1000-SE0600K	L1000-DE0600K
		800mm	L1000-SE0800K	L1000-DE0800K
1200mm	1000mm	600mm	L1200-SE0600K	L1200-DE0600K
		800mm	L1200-SE0800K	L1200-DE0800K
		1000mm	L1200-SE1000K	L1200-DE1000K
1400mm	1200mm	800mm	L1400-SE0800K	L1400-DE0800K
		1000mm	L1400-SE1000K	L1400-DE1000K
		1200mm	L1400-SE1200K	L1400-DE1200K

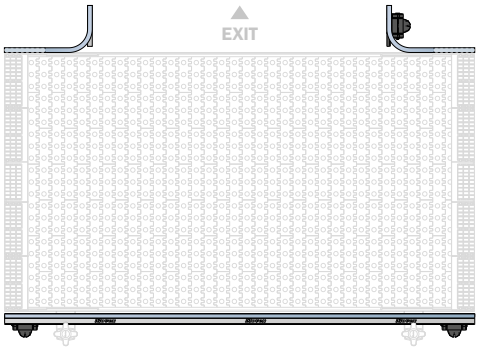

Configuration for single exit option.

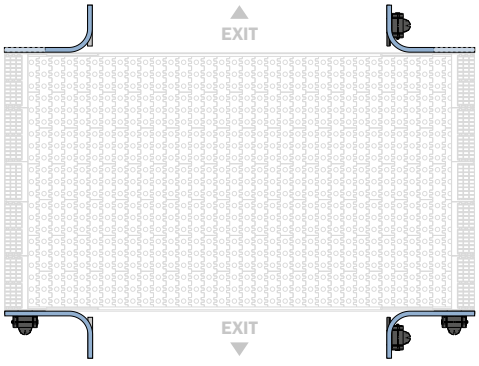

Configuration for double exit option.

Oadby Core product range
Oadby Available from stock in Leicester
Easy Available from stock in Italy
Standard Produced to order in Italy

Movex®

ZERO 520 CONTACT
CURVE CONVEYOR

Company	
Sales contact	
Contact	
Date	

Technical features	Please circle required input or fill the proper field							
Radius - mm (in)	600 (23.6)	800 (31.5)	1000 (39.4)	1200 (47.2)	1400 (55.1)	1600 (63)	1800 (70.9)	2000 (78.7)
Width - mm (in)	200 (7.9)	400 (15.7)	600 (23.6)	800 (31.5)	1000 (39.4)	1200 (47.2)	1400 (55.1)	1600 (63)
Angle	90°			180°			Different:	
Direction	Right (clockwise)				Left (counter clockwise)			
Gearmotor position	Internal				External			
Transfer plates	Plastic with stainless steel rollers				Stainless steel with stainless steel rollers			
Gearmotor *	No	Yes	SEW	Different shaft for:				
Floor supports height - mm (in)	No	Yes	1000+/-75 (39.4+/-3.0)	Different:				
ZeroATP - mm (in) **	No	Yes	Infeed		Outfeed		250 (9.8)	500 (19.7)

* For a different gearmotor, please fill with type and model, we will provide a quotation with the proper machined shaft

** In case of ZeroATP selected, standard transfers will not be included (based on sides selected)

ZeroATP Pro **	
No	Yes

Type of product	
Product dimensions (mm)	
Weight per linear meter (Kg/m)	
Belt Speed	
Number of tracks per products	

Double check here if your combination Radius/Width is available

W/R	600 (23.6)	800 (31.5)	1000 (39.4)	1200 (47.2)	1400 (55.1)	1600 (63)	1800 (70.9)	2000 (78.7)
200 (7.9)	■	■	■	■	■	■	■	■
400 (15.7)	■	■	■	■	■	■	■	
600 (23.6)	■	■	■	■	■	■		
800 (31.5)	■	■	■	■	■			
1000 (39.4)	■	■	■	■				
1200 (47.2)	■	■	■					
1400 (55.1)	■	■						
1600 (63)	■							

Example of module filled

Technical features	Please circle required input or fill the proper field							
Radius - mm (inch)	(600 (23.6))	800 (31.5)	1000 (39.4)	1200 (47.2)	1400 (55.1)	1600 (63)	1800 (70.9)	2000 (78.7)
Width - mm (inch)	200 (7.9)	400 (15.7)	600 (23.6)	(800 (31.5))	1000 (39.4)	1200 (47.2)	1400 (55.1)	1600 (63)
Angle	(90°)			180°			Different:	
Direction	Right (clockwise)				(Left (counter clockwise))			
Gearmotor position	(Internal)				External			
Transfer plates	Plastic with stainless steel rollers				(No)			
Painted steel frames	Blue Grey RAL 7031				Different (specify the RAL):			
Bottom safety cover	Yes				(No)			
Gearmotor *	No	(Yes)	(BONFIGLIOLI)	Different shaft for:				
Floor supports height - mm (inch)	No	(Yes)	(1000+/-75 (39.4+/-3.0))	Different:				
ZeroATP - mm (inch) **	No	(Yes)	(Infeed)		Outfeed		(250 (9.8))	500 (19.7)

ZERO PRO CONTACT
CURVE CONVEYOR

Company	
Sales contact	
Contact	
Date	

Technical features	Please circle required input or fill the proper field								
Radius - mm (in)	586 (23.1)	756 (29.8)	1011 (39.8)	1031 (40.6)	1116 (43.9)	1201 (47.3)	1286 (50.6)	1456 (57.3)	1541 (60.7)
Width - mm (in)	249 (9.8)	269 (10.6)	419 (16.5)	439 (17.3)	504 (19.8)	524 (20.6)	864 (34)	1034 (40.7)	
Angle	90°			180°		Different:			
Direction	Right (clockwise)				Left (counter clockwise)				
Version *	Standard				"Two-Tracks"				
Gearmotor position	Internal				External				
Transfer plates	Plastic with stainless steel rollers				Stainless steel with stainless steel rollers				
Gearmotor **	No	Yes	SEW	Different shaft for:					
Floor supports height - mm (in)	No	Yes	1000+/-75 (39.4+/-3.0)	Different:					
ZeroATP - mm (in) ***	No	Yes	Infeed		Outfeed		250 (9.8)	500 (19.7)	

* In case of "Two-Tracks" version, no need to fill Gearmotor position fields

** In case of different gearmotor, please provide model and type name and we will quote a curve with requried machined shaft

*** In case of ZeroATP, standard transfers plates will not be included (based on the side selected)

ZeroATP Pro ***	
No	Yes

Type of product	
Product dimensions (mm)	
Weight per linear meter (Kg/m)	
Belt Speed	
Number of tracks per products	

Double check here if your combination Radius/Width is available

W/R	586 (23.1)	756 (29.8)	1011 (39.8)	1031 (40.6)	1116 (43.9)	1201 (47.3)	1286 (50.6)	1456 (57.3)	1541 (60.7)
249 (9.8)				■			■		
269 (10.6)		■	■						
419 (16.5)				■		■		■	
439 (17.3)	■	■	■						
504 (19.8)					■		■		■
524 (20.6)	■	■	■						
864 (34)	■	■	■						
1034 (40.7)	■	■	■						

Example of module filled

Technical features	Please circle required input or fill the proper field								
Radius - mm (inch)	600 (23.6)	800 (31.5)	1000 (39.4)	1200 (47.2)	1400 (55.1)	1600 (63)	1800 (70.9)	2000 (78.7)	
Width - mm (inch)	200 (7.9)	400 (15.7)	600 (23.6)	800 (31.5)	1000 (39.4)	1200 (47.2)	1400 (55.1)	1600 (63)	
Angle	90°			180°			Different:		
Direction	Right (clockwise)				Left (counter clockwise)				
Gearmotor position	Internal				External				
Transfer plates	Plastic with stainless steel rollers				No				
Painted steel frames	Blue Grey RAL 7031				Different (specify the RAL):				
Bottom safety cover	Yes				No				
Gearmotor *	No	Yes	BONFIGLIOLI	Different shaft for:					
Floor supports height - mm (inch)	No	Yes	1000+/-75 (39.4+/-3.0)	Different:					
ZeroATP - mm (inch) **	No	Yes	Infeed		Outfeed		250 (9.8)	500 (19.7)	

ZERO 520 CONTACT S
CURVE CONVEYOR

Company	
Sales contact	
Contact	
Date	

Technical features	Please circle required input or fill the proper field							
Radius - mm (in)	600 (23.6)	800 (31.5)	1000 (39.4)	1200 (47.2)	1400 (55.1)	1600 (63)	1800 (70.9)	2000 (78.7)
Width - mm (in)	200 (7.9)	400 (15.7)	600 (23.6)	800 (31.5)	1000 (39.4)	1200 (47.2)	1400 (55.1)	1600 (63)
Angle	90°			180°			Different:	
Direction	Right (clockwise)				Left (counter clockwise)			
Gearmotor position	Internal				External			
Transfer plates	Plastic with stainless steel rollers				No			
Painted steel frames	Blue Grey RAL 7031				Different (specify the RAL):			
Bottom safety cover	Yes				No			
Gearmotor *	No	Yes	BONFIGLIOLI	Different shaft for:				
Floor supports height - mm (in)	No	Yes	1000+/-75 (39.4+/-3.0)	Different:				
ZeroATP - mm (in) **	No	Yes	Infeed		Outfeed		250 (9.8)	500 (19.7)

* In case of different gearmotor, please provide model and type name and we will quote a curve with requried machined shaft

** In case of ZeroATP, standard transfers plates will not be included (based on the side selected)

ZeroATP Pro **	
No	Yes

Type of product	
Product dimensions (mm)	
Weight per linear meter (Kg/m)	
Belt Speed	
Number of tracks per products	

Double check here if your combination Radius/Width is available

W/R	600 (23.6)	800 (31.5)	1000 (39.4)	1200 (47.2)	1400 (55.1)	1600 (63)	1800 (70.9)	2000 (78.7)
200 (7.9)	■	■	■	■	■	■	■	■
400 (15.7)	■	■	■	■	■	■	■	
600 (23.6)	■	■	■	■	■	■		
800 (31.5)	■	■	■	■	■			
1000 (39.4)	■	■	■	■				
1200 (47.2)	■	■	■					
1400 (55.1)	■	■						
1600 (63)	■							

Example of module filled

Technical features	Please circle required input or fill the proper field							
Radius - mm (inch)	(600 (23.6))	800 (31.5)	1000 (39.4)	1200 (47.2)	1400 (55.1)	1600 (63)	1800 (70.9)	2000 (78.7)
Width - mm (inch)	200 (7.9)	400 (15.7)	600 (23.6)	(800 (31.5))	1000 (39.4)	1200 (47.2)	1400 (55.1)	1600 (63)
Angle	(90°)			180°			Different:	
Direction	Right (clockwise)				(Left (counter clockwise))			
Gearmotor position	(Internal)				External			
Transfer plates	Plastic with stainless steel rollers				(No)			
Painted steel frames	Blue Grey RAL 7031				Different (specify the RAL):			
Bottom safety cover	Yes				No			
Gearmotor *	No	(Yes)	(BONFIGLIOLI)	Different shaft for:				
Floor supports height - mm (inch)	No	(Yes)	(1000+/-75 (39.4+/-3.0))	Different:				
ZeroATP - mm (inch) **	No	(Yes)	(Infeed)		Outfeed		(250 (9.8))	500 (19.7)

553 SORTER+
MULTIDIRECTIONAL CONVEYOR

Company	
Sales contact	
Contact	
Date	

Technical features	Please circle required input or fill the proper field								
Width - mm (in)	390 (15.4)	470 (18.5)	545 (21.5)	620 (24.4)	695 (27.4)	770 (30.3)	850 (33.5)	925 (36.4)	1000 (39.4)
Length - mm (in)	600 (23.6)		800 (31.5)		1000 (39.4)		1200 (47.2)		1400 (55.1)
Version	DIVERTER		DYNAMIC TURN		STATIC TURN		SPEED		
Exit width - mm (in)	400 (15.8)		600 (23.6)		800 (31.5)		1000 (39.4)		1200 (47.2)
Exit type - mm (in)	SINGLE				DOUBLE				
Accessories	No	Yes	Photo eyes			Photo eyes and Side guides			
Gearmotor *	No	Yes	SEW	BONFIGLIOLI	Different shaft for:				
Floor supports height - mm (in)	No	Yes	1000+/-75 (39.4+/-3.0)		Different:				

* For a different gearmotor, please fill with type and model, we will provide a quotation with the proper machined shaft

** In case of ZeroATP, standard transfers plates will not be included (based on the side selected)

ZeroATP Pro **	
No	Yes

Type of product		
Product dimensions (mm)		
Product weight (Kg)		
Belt Speed		
Capacity		
Product pitch		
Movement description		Sketch

Double check here if your combination Length/Width is available

W/R	600 (23.6)	800 (31.5)	1000 (39.4)	1200 (47.2)	1400 (55.1)
390 (15.35)	■	■			
470 (18.5)	■	■	■		
545 (21.45)	■	■	■		
620 (24.4)		■	■	■	
695 (27.36)		■	■	■	
770 (30.3)		■	■	■	
850 (33.46)			■	■	■
925 (36.4)			■	■	■
1000 (39.4)				■	■

Example of module filled

Technical features	Please circle required input or fill the proper field								
Width - mm (in)	(390 (15.4))	470 (18.5)	545 (21.5)	620 (24.4)	695 (27.4)	770 (30.3)	850 (33.5)	925 (36.4)	1000 (39.4)
Length - mm (in)	600 (23.6)		(800 (31.5))		1000 (39.4)		1200 (47.2)		1400 (55.1)
Version	(DIVERTER)		DYNAMIC TURN		STATIC TURN		SPEED		
Exit width - mm (in)	400 (15.8)		600 (23.6)		(800 (31.5))		1000 (39.4)		1200 (47.2)
Exit type - mm (in)	SINGLE				(DOUBLE)				
Accessories	No	(Yes)	(Photo eyes)			Photo eyes and Side guides			
Gearmotor *	No	(Yes)	(SEW)	BONFIGLIOLI	Different shaft for:				
Floor supports height - mm (in)	(No)	Yes	1000+/-75 (39.4+/-3.0)		Different:				

311

For bore tolerance refers to Movex engineering manual available on our website.

Belt sprockets

510 Pag 312
521-520 HD-522 Pag 313
HD-520 PRO LBP Pag 313
521-520 HD-522 Pag 314
HD-520 PRO LBP Pag 314
520 Pag 315
520 Pag 315
520 Pag 316
520 Pag 316
525-530 Pag 317
525-530 Pag 317
590 Pag 318
590 Pag 318
550 Pag 319
550 Pag 319
550 Pag 320
550 Pag 320
550 PRO Pag 321
550 PRO Pag 321
550 PRO Pag 322
550 PRO Pag 322
551 Pag 323
551 Pag 323
551 Pag 324
551 Pag 324
552 Pag 325
552 Pag 325
553 Pag 326
553 Pag 326
556 Pag 327
556 Pag 327
260-261 Pag 328
260-261 Pag 328
260-261 Pag 329
260-261 Pag 329
600 Pag 330
600 Pag 330
600 Support Pag 331
600 Support Pag 331
600 Split S. roller Pag 331
ZERO CONTACT Pag 332
ZERO CONTACT PRO Pag 332
500RR Pag 333
500RR Pag 333
500RR SPLIT V. Pag 334

Material Info:

pg. 666

Materiale / *Material / Materialien:*
Poliammide/*Polyamide/Polyamid*
Viti: Acciaio inox/*Screws: Stainless steel/Schrauben: Edelstahl*
Dadi: ferro zincato/*Nuts: zinc plated steel/Mutter: verzinkter Stahl*

510 Ruota traino divisa, fresata
Split drive sprocket, machined / geteiltes Antriebskettenrad, gefräst

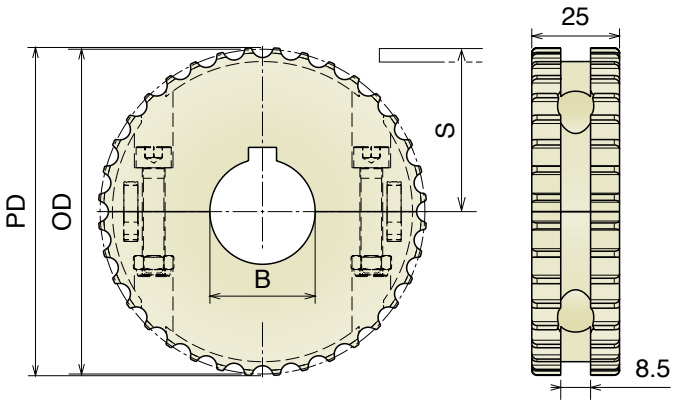

Part	Article-Nr.	Z-	Bore	PD	OD	S
1599	159936E	16**	20	41	40,2	16,65
1601	160101E	18**	25	46,5	47,3	20,2
1601	160111E		20* 20 ⎅			
1598	159896E	20**	25	51,5	51,5	22,3
1602	160201E	24**	25	61,8	62,6	27,9
1603	160206E		25* 25 ⎅			
1603	160301	36	25	92,6	93,5	43,3
1603	160302		30			
1603	160303		35			
1603	160304		40			
1603	160306		25* 25 ⎅			
1603	160307		30* 30 ⎅			
1603	160308		40* 40 ⎅			

**Drive sprockets z-16, z-18, z-20 and z-24 are supplied non-split

Oadby Core product range
Oadby Available from stock in Leicester
Easy Available from stock in Italy
Standard Produced to order in Italy
Movex

521-520 HD-522 HD-520 *PRO* LBP

Ruota traino divisa, fresata
Split drive sprocket, machined
geteiltes Antriebskettenrad, gefräst

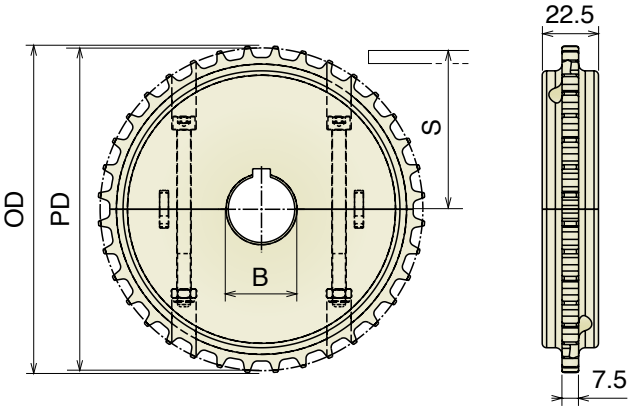

Part	Article-Nr.	Z-	Bore	PD	OD	S
1561	156101	28	25	113,4	115,4	52,4
1561	156102		30			
1561	156103		35			
1561	156104		40			
1561	156106		25* 25 ⎅			
1561	156107		30* 30 ⎅			
1561	156108		40* 40 ⎅			
1562	156201	36	25	145,7	147,7	68,5
1562	156202		30			
1562	156203		35			
1562	156204		40			
1562	156206		25* 25 ⎅			
1562	156207		30* 30 ⎅			
1562	156208		40* 40 ⎅			
1563	156301	38	25	153,8	155,8	72,6
1563	156302		30			
1563	156303		35			
1563	156304		40			
1563	156306		25* 25 ⎅			
1563	156307		30* 30 ⎅			
1563	156308		40* 40 ⎅			
1564	156401	40	25	161,9	163,8	76,6
1564	156402		30			
1564	156403		35			
1564	156404		40			
1564	156406		25* 25 ⎅			
1564	156407		30* 30 ⎅			
1564	156408		40* 40 ⎅			

Ruota rinvio divisa, fresata
Split idler sprocket, machined / geteiltes Umlenkrad, gefräst

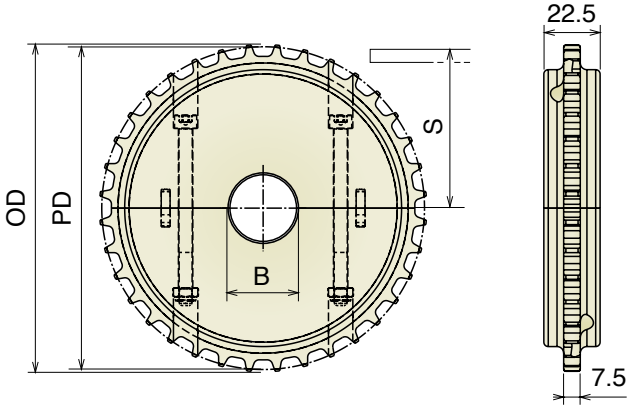

Part	Article-Nr.	Z-	Bore	PD	OD	S
1561	156150	28	18*	113,4	115,4	52,4
1561	156151		25			
1561	156152		30			
1561	156153		35			
1561	156154		40			
1562	156250	36	18*	145,7	147,7	68,5
1562	156251		25			
1562	156252		30			
1562	156253		35			
1562	156254		40			
1563	156350	38	18*	153,8	155,8	72,6
1563	156351		25			
1563	156352		30			
1563	156353		35			
1563	156354		40			
1564	156450	40	18*	161,9	163,8	76,6
1564	156451		25			
1564	156452		30			
1564	156453		35			
1564	156454		40			

*Plain Bore

Materiale / *Material / Materialien:*
Poliammide/*Polyamide/Polyamid*
Viti: Acciaio inox/*Screws: Stainless steel/Schrauben: Edelstahl*
Dadi: ferro zincato/*Nuts: zinc plated steel/Mutter: verzinkter Stahl*

521-520 HD-522 HD-520 *PRO* LBP

Ruota traino divisa, stampata
Split drive sprocket, molded
geteiltes Antriebskettenrad, gespritzt

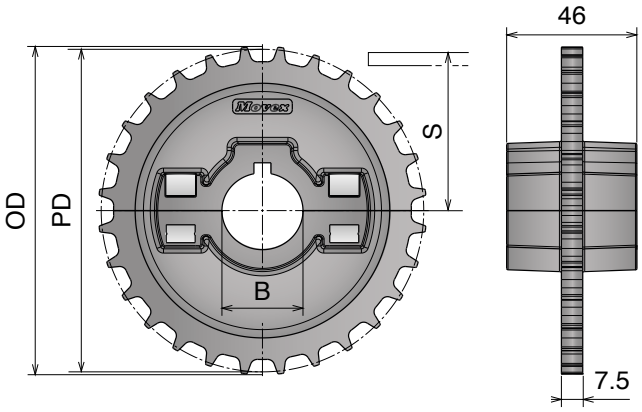

Part	Article-Nr.	Z-	Bore	PD	OD	S
1630	163001	24	25	97,3	99,3	44,3
1630	163002		30			
1630	163003		35			
1630	163004		40			
1630	163006		25* 25 ⏍			
1630	163007		30* 30 ⏍			
1630	163008		40* 40 ⏍			
1631	163101	28	25	113,4	115,4	52,4
1631	163102		30			
1631	163103		35			
1631	163104		40			
1631	163106		25* 25 ⏍			
1631	163107		30* 30 ⏍			
1631	163108		40* 40 ⏍			
1632	163201	36	25	145,7	147,7	68,5
1632	163202		30			
1632	163203		35			
1632	163204		40			
1632	163206		25* 25 ⏍			
1632	163207		30* 30 ⏍			
1632	163208		40* 40 ⏍			

Ruota rinvio divisa, stampata
Split idler sprocket, molded / geteiltes Umlenkrad, gespritzt

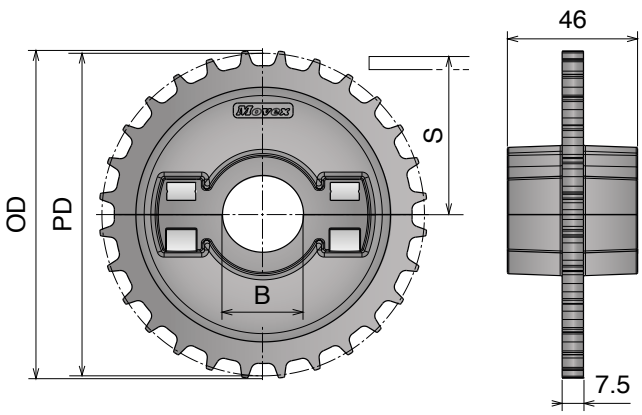

Part	Article-Nr.	Z-	Bore	PD	OD	S
1630	163051	24	25	97,3	99,3	44,3
1630	163052		30			
1630	163053		35			
1630	163054		40			
1631	163151	28	25	113,4	115,4	52,4
1631	163152		30			
1631	163153		35			
1631	163154		40			
1632	163251	36	25	145,7	147,7	68,5
1632	163252		30			
1632	163253		35			
1632	163254		40			

Oadby Core product range
Oadby Available from stock in Leicester
Easy Available from stock in Italy
Standard Produced to order in Italy

Movex®

Materiale / *Material* / *Materialien:*
Poliammide/*Polyamide/Polyamid*
Viti: Acciaio inox/*Screws: Stainless steel/Schrauben: Edelstahl*
Dadi: ferro zincato/*Nuts: zinc plated steel/Mutter: verzinkter Stahl*

520 Ruota traino divisa, fresata
Split drive sprocket, machined / geteiltes Antriebskettenrad, gefräst

Delivery: Easy Standard

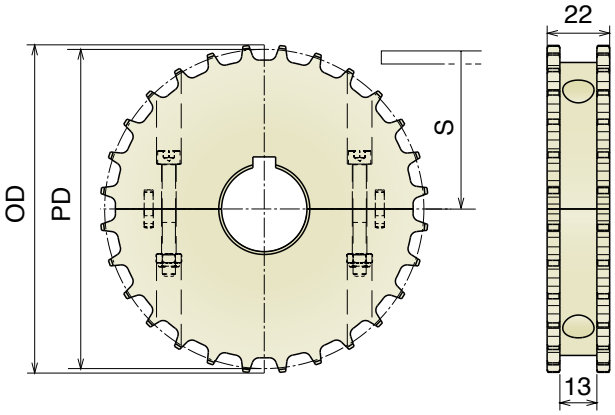

Part	Article-Nr.	Z-	Bore	PD	OD	S
1501	150101	28	25	113,4	115,4	52,4
1501	150102		30			
1501	150103		35			
1501	150104		40			
1501	150106		25* 25 ⎅			
1501	150107		30* 30 ⎅			
1501	150108		40* 40 ⎅			
1502	150201	36	25	145,7	147,7	68,5
1502	150202		30			
1502	150203		35			
1502	150204		40			
1502	150206		25* 25 ⎅			
1502	150207		30* 30 ⎅			
1502	150208		40* 40 ⎅			
1503	150301	38	25	153,8	155,8	72,6
1503	150302		30			
1503	150303		35			
1503	150304		40			
1503	150306		25* 25 ⎅			
1503	150307		30* 30 ⎅			
1503	150308		40* 40 ⎅			
1504	150401	40	25	161,9	163,8	76,6
1504	150402		30			
1504	150403		35			
1503	150404		40			
1504	150406		25* 25 ⎅			
1504	150407		30* 30 ⎅			
1504	150408		40* 40 ⎅			

Ruota rinvio divisa, fresata
Split idler sprocket, machined / geteiltes Umlenkrad, gefräst

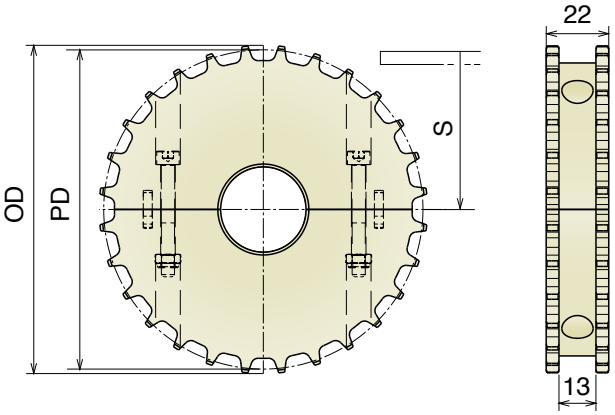

Part	Article-Nr.	Z-	Bore	PD	OD	S
1501	150150	28	18*	113,4	115,4	52,4
1501	150151		25			
1501	150152		30			
1501	150153		35			
1501	150154		40			
1502	150250	36	18*	145,7	147,7	68,5
1502	150251		25			
1502	150252		30			
1502	150253		35			
1502	150254		40			
1503	150350	38	18*	153,8	155,8	72,6
1503	150351		25			
1503	150352		30			
1503	150353		35			
1503	150354		40			
1504	150450	40	18*	161,9	163,8	76,6
1504	150451		25			
1504	150452		30			
1504	150453		35			
1504	150454		40			

*Plain Bore

Materiale / *Material / Materialien:*
Poliammide rinforzato/Polyamide reinforced/Verstärktes Polyamid
Viti: Acciaio inox/*Screws: Stainless steel/Schrauben: Edelstahl*
Dadi: Ottone nichelato/*Nuts: Nickel plated brass/Mutter: Messing*

520 Ruota traino divisa, stampata
Split drive sprocket, molded / geteiltes Antriebskettenrad, gespritzt

Delivery: Easy Standard

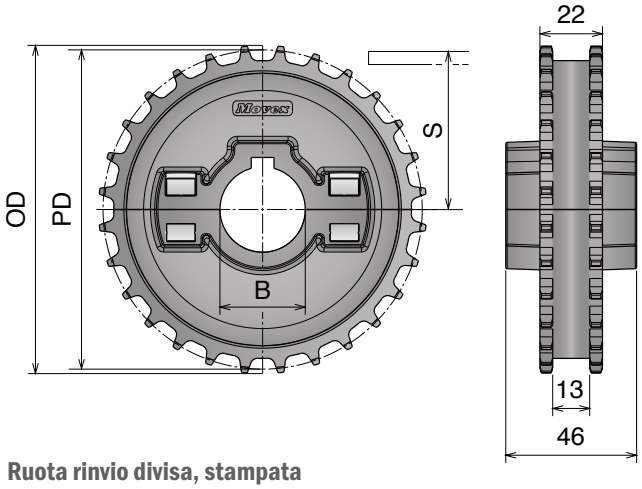

Part	Article-Nr.	Z-	Bore	PD	OD	S
1505	150501	24	25	97,3	99,3	44,3
1505	150502		30			
1505	150503		35			
1505	150504		40			
1505	150506		25* 25 ⏍			
1505	150507		30* 30 ⏍			
1505	150508		40* 40 ⏍			
1506	150601	28	25	113,4	115,4	52,4
1506	150602		30			
1506	150603		35			
1506	150604		40			
1506	150606		25* 25 ⏍			
1506	150607		30* 30 ⏍			
1506	150608		40* 40 ⏍			
1507	150701	36	25	145,7	147,7	68,5
1507	150702		30			
1507	150703		35			
1507	150704		40			
1507	150706		25* 25 ⏍			
1507	150707		30* 30 ⏍			
1507	150708		40* 40 ⏍			

Ruota rinvio divisa, stampata
Split idler sprocket, molded / geteiltes Umlenkrad, gespritzt

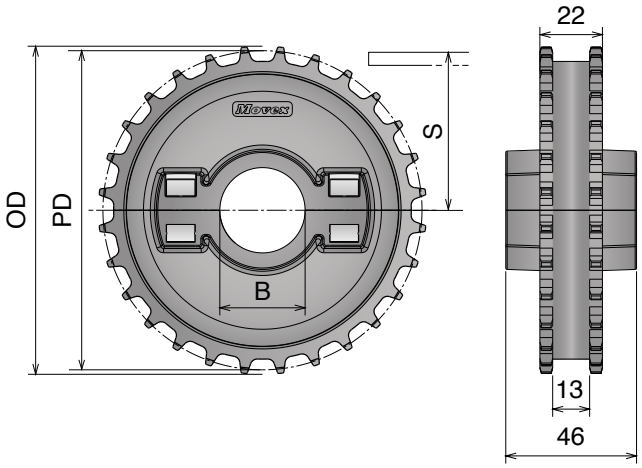

Part	Article-Nr.	Z-	Bore	PD	OD	S
1505	150551	24	25	97,3	99,3	44,3
1505	150552		30			
1505	150553		35			
1505	150554		40			
1506	150651	28	25	113,4	115,4	52,4
1506	150652		30			
1506	150653		35			
1506	150654		40			
1507	150751	36	25	145,7	147,7	68,5
1507	150752		30			
1507	150753		35			
1507	150754		40			

Oadby Core product range
Oadby Available from stock in Leicester
Easy Available from stock in Italy
Standard Produced to order in Italy

Movex®

Materiale / *Material* / *Materialien:*
Poliammide/*Polyamide/Polyamid*
Viti: Acciaio inox/*Screws: Stainless steel/Schrauben: Edelstahl*
Dadi: ferro zincato/*Nuts: zinc plated steel/Mutter: verzinkter Stahl*

525-530

Ruota traino divisa, fresata
Split drive sprocket, machined / geteiltes Antriebskettenrad, gefräst

Delivery: Easy Standard

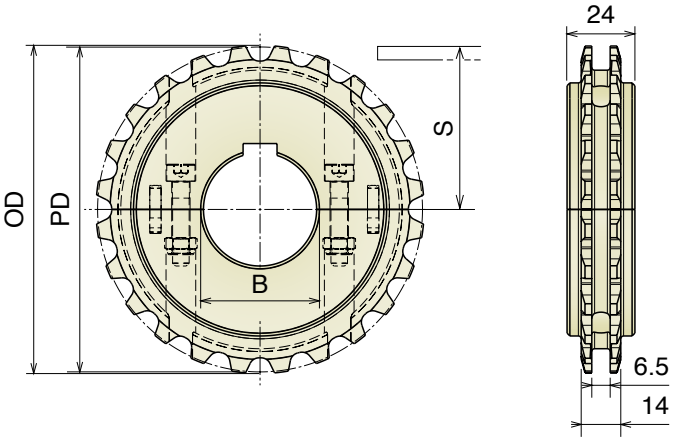

Part	Article-Nr.	Z-	Bore	PD	OD	S
1581	158101E	12**	25	58,1	58,2	24,1
1581	158106E		25x25 ⍁			
1582	158201E	16**	25	77,1	77,7	33,6
1582	158202E		30			
1582	158206E		25x25 ⍁			
1582	158207E		30x30 ⍁			
1583	158301	24	25	114,9	115,5	52,5
1583	158302		30			
1583	158303		35			
1583	158304		40			
1583	158306		25x25 ⍁			
1583	158307		30x30 ⍁			
1583	158308		40x40 ⍁			
1584	158401	32	25	153,4	154,8	71,75
1584	158402		30			
1584	158403		35			
1584	158404		40			
1584	158406		25x25 ⍁			
1584	158407		30x30 ⍁			
1584	158408		40x40 ⍁			

**Drive sprockets Z-12 and Z-16 are supplied non-split.

Ruota rinvio divisa, fresata
Split idler sprocket, machined / geteiltes Umlenkrad, gefräst

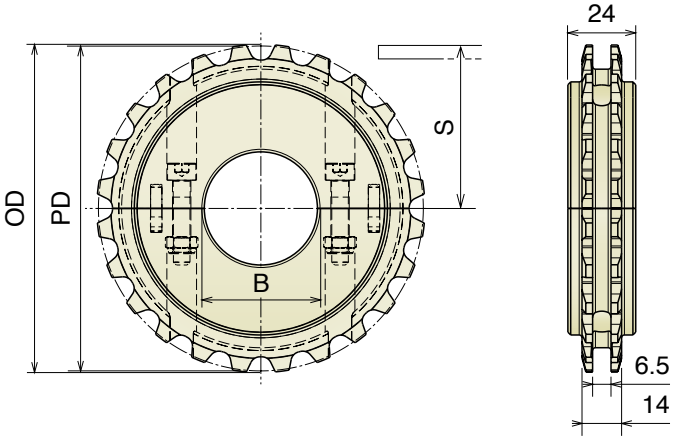

Part	Article-Nr.	Z-	Bore	PD	OD	S
1581	158150E	12**	18*	58,1	58,2	24,1
1581	158151E		25			
1582	158250E	16**	18*	77,1	77,7	33,6
1582	158251E		25			
1582	158252E		30			
1583	158350	24	18*	114,9	115,5	52,5
1583	158351		25			
1583	158352		30			
1583	158353		35			
1583	158354		40			
1584	158450	32	18*	153,4	154,8	71,75
1584	158451		25			
1584	158452		30			
1584	158453		35			
1584	158454		40			

**Drive sprockets Z-12 and Z-16 are supplied non-split.
*Plain Bore

Materiale / *Material* / *Materialien:*
Poliammide/*Polyamide/Polyamid*
Viti: Acciaio inox/*Screws: Stainless steel/Schrauben: Edelstahl*
Dadi: ferro zincato/*Nuts: zinc plated steel/Mutter: verzinkter Stahl*

590 Ruota traino divisa, fresata
Split drive sprocket, machined / geteiltes Antriebskettenrad, gefräst

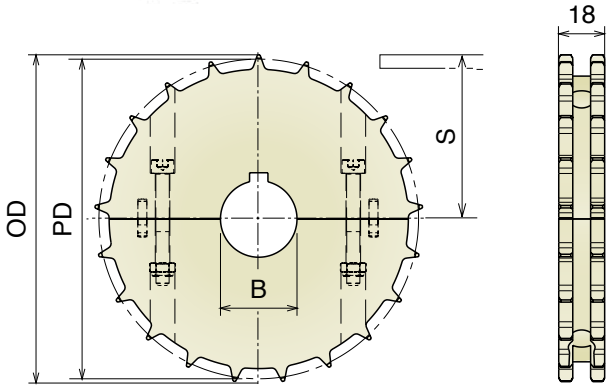

Part	Article-Nr.	Z-	Bore	PD	OD	S
1511	151101	17	25	100,7	103,4	46,0
1511	151102		30			
1511	151103		35			
1511	151104		40			
1511	151106		25* 25 ⎅			
1511	151107		30* 30 ⎅			
1511	151108		40* 40 ⎅			
1512	151201	21	25	126,0	128,7	58,65
1512	151202		30			
1512	151203		35			
1512	151204		40			
1512	151206		25* 25 ⎅			
1512	151207		30* 30 ⎅			
1512	151208		40* 40 ⎅			
1513	151301	24	25	142,9	145,6	67,1
1513	151302		30			
1513	151303		35			
1513	151304		40			
1513	151306		25* 25 ⎅			
1513	151307		30* 30 ⎅			
1513	151308		40* 40 ⎅			
1514	151401	25	25	149,0	151,7	70,15
1514	151402		30			
1514	151403		35			
1514	151404		40			
1514	151406		25* 25 ⎅			
1514	151407		30* 30 ⎅			
1514	151408		40* 40 ⎅			

Ruota rinvio divisa, fresata
Split idler sprocket, machined / geteiltes Umlenkrad, gefräst

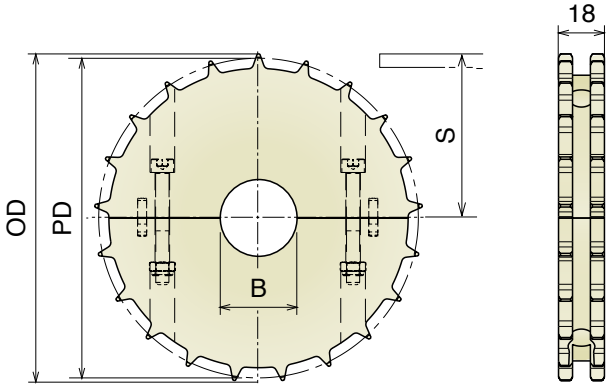

Part	Article-Nr.	Z-	Bore	PD	OD	S
1511	151150	17	18*	100,7	103,4	46,0
1511	151151		25			
1511	151152		30			
1511	151153		35			
1511	151154		40			
1512	151250	21	18*	126,0	128,7	58,65
1512	151251		25			
1512	151252		30			
1512	151253		35			
1512	151254		40			
1513	151350	24	18*	142,9	145,6	67,1
1513	151351		25			
1513	151352		30			
1513	151353		35			
1513	151354		40			
1514	151450	25	18*	149,0	151,7	70,15
1514	151451		25			
1514	151452		30			
1514	151453		35			
1514	151454		40			

*Plain Bore

Oadby Core product range
Oadby Available from stock in Leicester
Easy Available from stock in Italy
Standard Produced to order in Italy
Movex

Materiale / *Material* / *Materialien:*
Poliammide/*Polyamide/Polyamid*
Viti: Acciaio inox/*Screws: Stainless steel/Schrauben: Edelstahl*
Dadi: ferro zincato/*Nuts: zinc plated steel/Mutter: verzinkter Stahl*

550 Ruota traino divisa, fresata
Split drive sprocket, machined / geteiltes Antriebskettenrad, gefräst

Delivery: Easy Standard

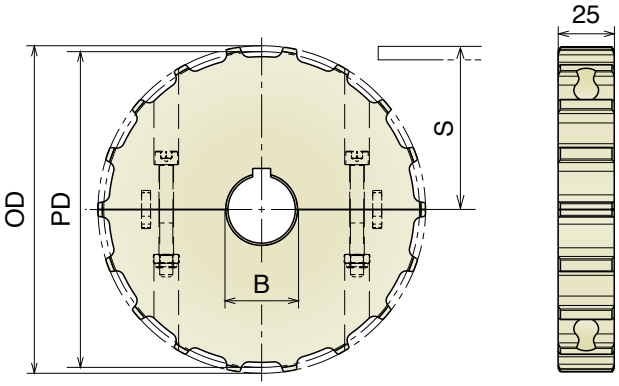

Part	Article-Nr.	Z-	Bore	PD	OD	S
1521	152101	14	25	114,1	114,0	52,7
1521	152102		30			
1521	152103		35			
1521	152104		40			
1521	152106		25* 25 ⎅			
1521	152107		30* 30 ⎅			
1521	152108		40* 40 ⎅			
1522	152201	16	25	130,2	130,0	60,7
1522	152202		30			
1522	152203		35			
1522	152204		40			
1522	152206		25* 25 ⎅			
1522	152207		30* 30 ⎅			
1522	152208		40* 40 ⎅			
1523	152301	18	25	146,3	146,0	68,8
1523	152302		30			
1523	152303		35			
1523	152304		40			
1523	152306		25* 25 ⎅			
1523	152307		30* 30 ⎅			
1523	152308		40* 40 ⎅			
1524	152401	20	25	162,4	162,0	76,8
1524	152402		30			
1524	152403		35			
1524	152404		40			
1524	152406		25* 25 ⎅			
1524	152407		30* 30 ⎅			
1524	152408		40* 40 ⎅			

Ruota rinvio divisa, fresata
Split idler sprocket, machined / geteiltes Umlenkrad, gefräst

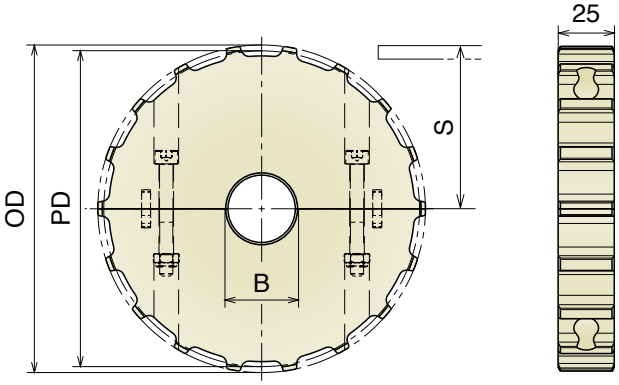

Part	Article-Nr.	Z-	Bore	PD	OD	S
1521	152150	14	18*	114,1	114,0	52,7
1521	152151		25			
1521	152152		30			
1521	152153		35			
1521	152154		40			
1522	152250	16	18*	130,2	130,0	60,7
1522	152251		25			
1522	152252		30			
1522	152253		35			
1522	152254		40			
1523	152350	18	18*	146,3	146,0	68,8
1523	152351		25			
1523	152352		30			
1523	152353		35			
1523	152354		40			
1524	152450	20	18*	162,4	162,0	76,8
1524	152451		25			
1524	152452		30			
1524	152453		35			
1524	152454		40			

*Plain Bore

Materiale / *Material / Materialien:*
Poliammide rinforzato/Polyamide reinforced/Verstärktes Polyamid
Viti: Acciaio inox/*Screws: Stainless steel/Schrauben: Edelstahl*
Dadi: Ottone nichelato/*Nuts: Nickel plated brass/Mutter: Messing*

550 Ruota traino divisa, stampata
Split drive sprocket, molded / geteiltes Antriebskettenrad, gespritzt

Delivery: Easy Standard

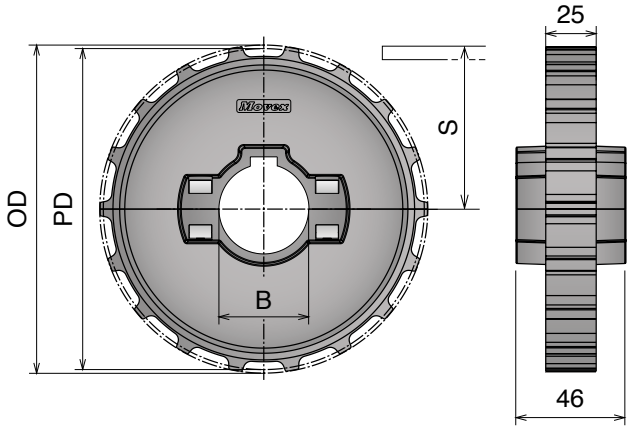

Part	Article-Nr.	Z-	Bore	PD	OD	S
1525	152501	14	25	114,1	114,0	52,7
1525	152502		30			
1525	152503		35			
1525	152504		40			
1525	152506		25* 25 ⎅			
1525	152507		30* 30 ⎅			
1525	152508		40* 40 ⎅			
1526	152601	16	25	130,2	130,0	60,7
1526	152602		30			
1526	152603		35			
1526	152604		40			
1526	152606		25* 25 ⎅			
1526	152607		30* 30 ⎅			
1526	152608		40* 40 ⎅			
1527	152701	18	25	146,3	146,0	68,8
1527	152702		30			
1527	152703		35			
1527	152704		40			
1527	152706		25* 25 ⎅			
1527	152707		30* 30 ⎅			
1527	152708		40* 40 ⎅			
1528	152801	20	25	162,4	162,0	76,8
1528	152802		30			
1528	152803		35			
1528	152804		40			
1528	152806		25* 25 ⎅			
1528	152807		30* 30 ⎅			
1528	152808		40* 40 ⎅			

Ruota rinvio divisa, stampata
Split idler sprocket, molded / geteiltes Umlenkrad, gespritzt

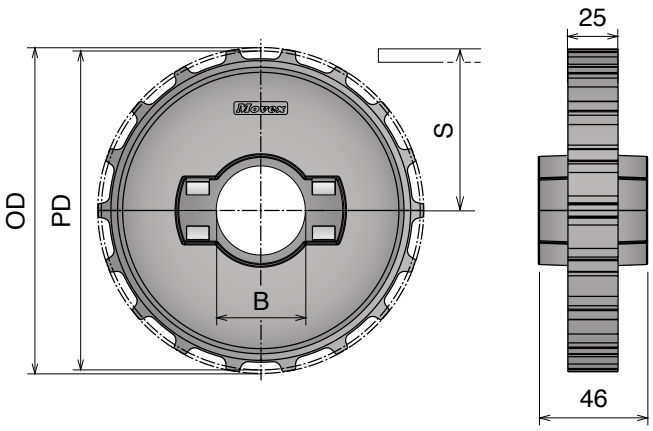

Part	Article-Nr.	Z-	Bore	PD	OD	S
1525	152551	14	25	114,1	114,0	52,7
1525	152552		30			
1525	152553		35			
1525	152554		40			
1526	152651	16	25	130,2	130,0	60,7
1526	152652		30			
1526	152653		35			
1526	152654		40			
1527	152751	18	25	146,3	146,0	68,8
1527	152752		30			
1527	152753		35			
1527	152754		40			
1528	152851	20	25	162,4	162,0	76,8
1528	152852		30			
1528	152853		35			
1528	152854		40			

Oadby Core product range
Oadby Available from stock in Leicester
Easy Available from stock in Italy
Standard Produced to order in Italy

Movex

Materiale / *Material* / *Materialien:*
Poliammide/*Polyamide/Polyamid*
Viti: Acciaio inox/*Screws: Stainless steel/Schrauben: Edelstahl*
Dadi: ferro zincato/*Nuts: zinc plated steel/Mutter: verzinkter Stahl*

550 PRO

Ruota traino divisa, fresata
Split drive sprocket, machined / geteiltes Antriebskettenrad, gefräst

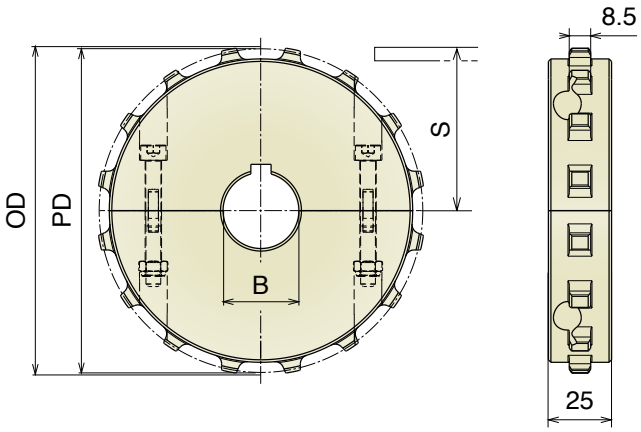

Part	Article-Nr.	Z-	Bore	PD	OD	S
1640	164001	14	25	114,1	114,0	52,7
1640	164002		30			
1640	164003		35			
1640	164004		40			
1640	164006		25* 25 ⍁			
1640	164007		30* 30 ⍁			
1640	164008		40* 40 ⍁			
1641	164101	16	25	130,2	130,0	60,7
1641	164102		30			
1641	164103		35			
1641	164104		40			
1641	164106		25* 25 ⍁			
1641	164107		30* 30 ⍁			
1641	164108		40* 40 ⍁			
1642	164201	18	25	146,3	146,0	68,8
1642	164202		30			
1642	164203		35			
1642	164204		40			
1642	164206		25* 25 ⍁			
1642	164207		30* 30 ⍁			
1642	164208		40* 40 ⍁			
1643	164301	20	25	162,4	162,0	76,8
1643	164302		30			
1643	164303		35			
1643	164304		40			
1643	164306		25* 25 ⍁			
1643	164307		30* 30 ⍁			
1643	164308		40* 40 ⍁			

Ruota rinvio divisa, fresata
Split idler sprocket, machined / geteiltes Umlenkrad,, gefräst

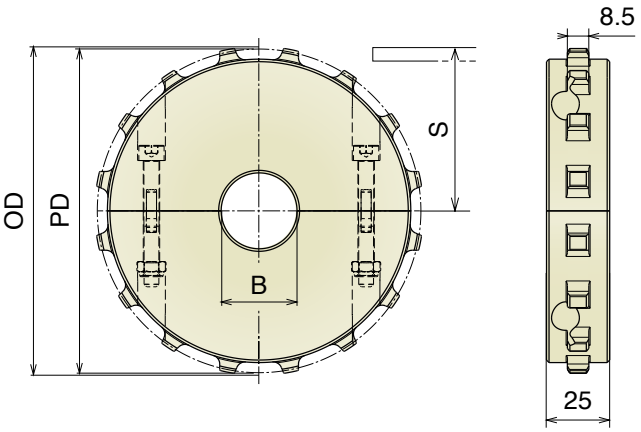

Part	Article-Nr.	Z-	Bore	PD	OD	S
1640	164050	14	18*	114,1	114,0	52,7
1640	164051		25			
1640	164052		30			
1640	164053		35			
1640	164054		40			
1641	164150	16	18*	130,2	130,0	60,7
1641	164151		25			
1641	164152		30			
1641	164153		35			
1641	164154		40			
1642	164250	18	18*	146,3	146,0	68,8
1642	164251		25			
1642	164252		30			
1642	164253		35			
1642	164254		40			
1643	164350	20	18*	162,4	162,0	76,8
1643	164351		25			
1643	164352		30			
1643	164353		35			
1643	164354		40			

*Plain Bore

Materiale / *Material* / *Materialien:*
Poliammide rinforzato/Polyamide reinforced/Verstärktes Polyamid
Viti: Acciaio inox/*Screws: Stainless steel/Schrauben: Edelstahl*
Dadi: Ottone nichelato/*Nuts: Nickel plated brass/Mutter: Messing*

550 *PRO* Ruota traino divisa, stampata
Split drive sprocket, molded / geteiltes Antriebskettenrad, gespritzt

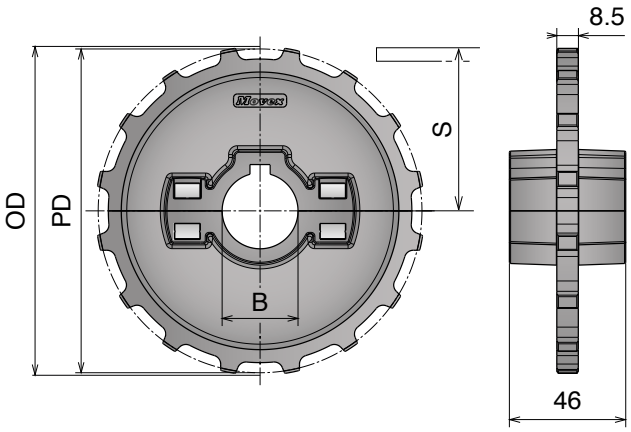

Part	Article-Nr.	Z-	Bore	PD	OD	S
1650	165001	14	25	114,1	114,0	52,7
1650	165002		30			
1650	165003		35			
1650	165004		40			
1650	165006		25* 25 ⏍			
1650	165007		30* 30 ⏍			
1650	165008		40* 40 ⏍			
1651	165101	16	25	130,2	130,0	60,7
1651	165102		30			
1651	165103		35			
1651	165104		40			
1651	165106		25* 25 ⏍			
1651	165107		30* 30 ⏍			
1651	165108		40* 40 ⏍			
1652	165201	18	25	146,3	146,0	68,8
1652	165202		30			
1652	165203		35			
1652	165204		40			
1652	165206		25* 25 ⏍			
1652	165207		30* 30 ⏍			
1652	165208		40* 40 ⏍			
1653	165301	20	25	162,4	162,0	76,8
1653	165302		30			
1653	165303		35			
1653	165304		40			
1653	165306		25* 25 ⏍			
1653	165307		30* 30 ⏍			
1653	165308		40* 40 ⏍			

Ruota rinvio divisa, stampata
Split idler sprocket, molded / geteiltes Umlenkrad, gespritzt

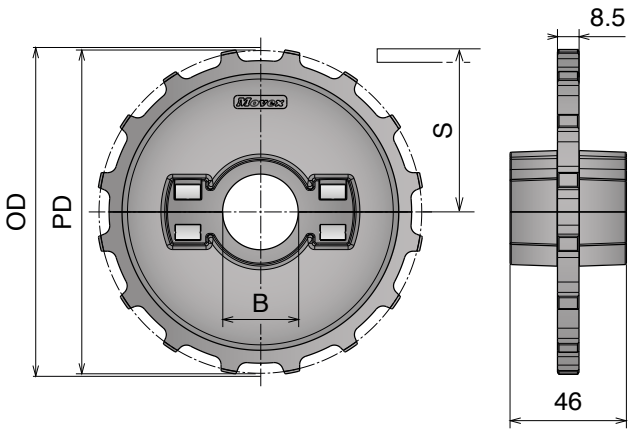

Part	Article-Nr.	Z-	Bore	PD	OD	S
1650	165051	14	25	114,1	114,0	52,7
1650	165052		30			
1650	165053		35			
1650	165054		40			
1651	165151	16	25	130,2	130,0	60,7
1651	165152		30			
1651	165153		35			
1651	165154		40			
1652	165251	18	25	146,3	146,0	68,8
1652	165252		30			
1652	165253		35			
1652	165254		40			
1653	165351	20	25	162,4	162,0	76,8
1653	165352		30			
1653	165353		35			
1653	165354		40			

Oadby Core product range
Oadby Available from stock in Leicester
Easy Available from stock in Italy
Standard Produced to order in Italy

Movex®

551 Ruota traino divisa, fresata

Split drive sprocket, machined / geteiltes Antriebskettenrad, gefräst

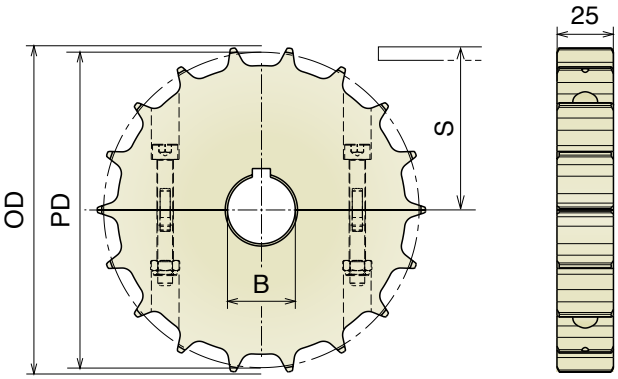

Part	Article-Nr.	Z-	Bore	PD	OD	S
1539	153901	11	25	90,2	92,0	39,7
1539	153902		30			
1539	153903E		35			
1539	153904E		40			
1539	153906		25* 25 ⍁			
1539	153907		30* 30 ⍁			
1539	153908E		40* 40 ⍁			
1531	153101	14	25	114,2	113,5	50,7
1531	153102		30			
1531	153103		35			
1531	153104		40			
1531	153106		25* 25 ⍁			
1531	153107		30* 30 ⍁			
1531	153108		40* 40 ⍁			
1532	153201	16	25	130,2	129,0	58,7
1532	153202		30			
1532	153203		35			
1532	153204		40			
1532	153206		25* 25 ⍁			
1532	153207		30* 30 ⍁			
1532	153208		40* 40 ⍁			
1533	153301	18	25	146,3	145,3	66,7
1533	153302		30			
1533	153303		35			
1533	153304		40			
1533	153306		25* 25 ⍁			
1533	153307		30* 30 ⍁			
1533	153308		40* 40 ⍁			
1534	153401	20	25	162,4	161,7	74,8
1534	153402		30			
1534	153403		35			
1534	153404		40			
1534	153406		25* 25 ⍁			
1534	153407		30* 30 ⍁			
1534	153408		40* 40 ⍁			
1634	163401	21	25	170,4	169,7	78,9
1634	163402		30			
1634	163403		35			
1634	163404		40			
1634	163406		25* 25 ⍁			
1634	163407		30* 30 ⍁			
1634	163408		40* 40 ⍁			

Ruota rinvio divisa, fresata

Split idler sprocket, machined / geteiltes Umlenkrad, gefräst

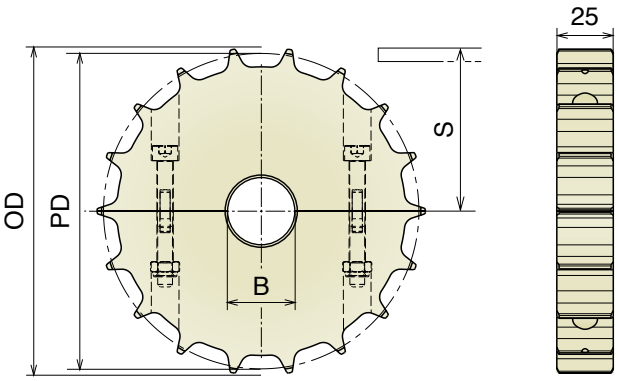

Part	Article-Nr.	Z-	Bore	PD	OD	S
1539	153950	11	18*	90,2	92,0	39,7
1539	153951		25			
1539	153952		30			
1539	153953E		35			
1539	153954E		40			
1531	153150	14	18*	114,2	114,0	50,7
1531	153151		25			
1531	153152		30			
1531	153153		35			
1531	153154		40			
1532	153250	16	18*	130,2	129,0	58,7
1532	153251		25			
1532	153252		30			
1532	153253		35			
1532	153254		40			
1533	153350	18	18*	146,3	145,3	66,7
1533	153351		25			
1533	153352		30			
1533	153353		35			
1533	153354		40			
1534	153450	20	18*	162,4	161,7	74,8
1534	153451		25			
1534	153452		30			
1534	153453		35			
1534	153454		40			
1634	163450	21	18*	170,4	169,7	78,9
1634	163451		25			
1634	163452		30			
1634	163453		35			
1634	163454		40			

*Plain Bore

Materiale / *Material / Materialien:*
Poliammide rinforzato/Polyamide reinforced/Verstärktes Polyamid
Viti: Acciaio inox/*Screws: Stainless steel/Schrauben: Edelstahl*
Dadi: Ottone nichelato/*Nuts: Nickel plated brass/Mutter: Messing*

551 Ruota traino divisa, stampata
Split drive sprocket, molded / geteiltes Antriebskettenrad, gespritzt

Delivery: Easy Standard

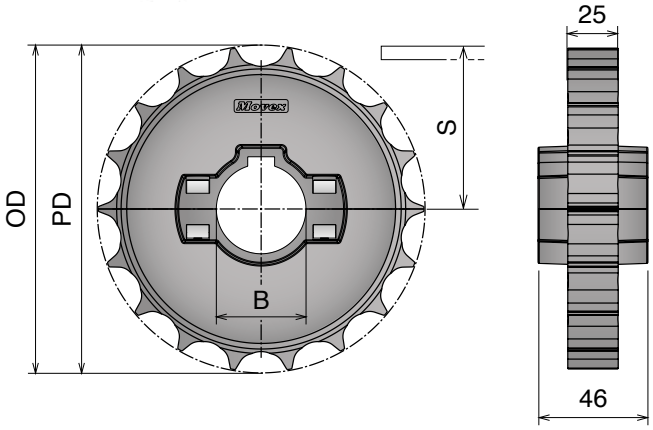

Part	Article-Nr.	Z-	Bore	PD	OD	S
1535	153501	14	25	114,2	113,5	50,7
1535	153502		30			
1535	153503		35			
1535	153504		40			
1535	153506		25* 25 ⏍			
1535	153507		30* 30 ⏍			
1535	153508		40* 40 ⏍			
1536	153601	16	25	130,2	129,0	58,7
1536	153602		30			
1536	153603		35			
1536	153604		40			
1536	153606		25* 25 ⏍			
1536	153607		30* 30 ⏍			
1536	153608		40* 40 ⏍			
1537	153701	18	25	146,3	145,3	66,7
1537	153702		30			
1537	153703		35			
1537	153704		40			
1537	153706		25* 25 ⏍			
1537	153707		30* 30 ⏍			
1537	153708		40* 40 ⏍			
1538	153801	20	25	162,4	161,7	74,8
1538	153802		30			
1538	153803		35			
1538	153804		40			
1538	153806		25* 25 ⏍			
1538	153807		30* 30 ⏍			
1538	153808		40* 40 ⏍			

Ruota rinvio divisa, stampata
Split idler sprocket, molded / geteiltes Umlenkrad, gespritzt

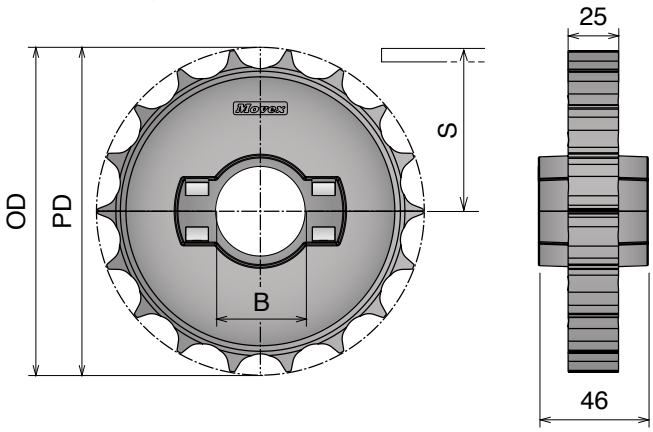

Part	Article-Nr.	Z-	Bore	PD	OD	S
1535	153551	14	25	114,2	113,5	50,7
1535	153552		30			
1535	153553		35			
1535	153554		40			
1536	153651	16	25	130,2	129,0	58,7
1536	153652		30			
1536	153653		35			
1536	153654		40			
1537	153751	18	25	146,3	145,3	66,7
1537	153752		30			
1537	153753		35			
1537	153754		40			
1538	153851	20	25	162,4	161,7	74,8
1538	153852		30			
1538	153853		35			
1538	153854		40			

Oadby Core product range
Oadby Available from stock in Leicester
Easy Available from stock in Italy
Standard Produced to order in Italy

Movex

Materiale / *Material* / *Materialien:*
Poliammide/*Polyamide/Polyamid*
Viti: Acciaio inox/*Screws: Stainless steel/Schrauben: Edelstahl*
Dadi: ferro zincato/*Nuts: zinc plated steel/Mutter: verzinkter Stahl*

552 Ruota traino divisa, fresata
Split drive sprocket, machined / geteiltes Antriebskettenrad, gefräst

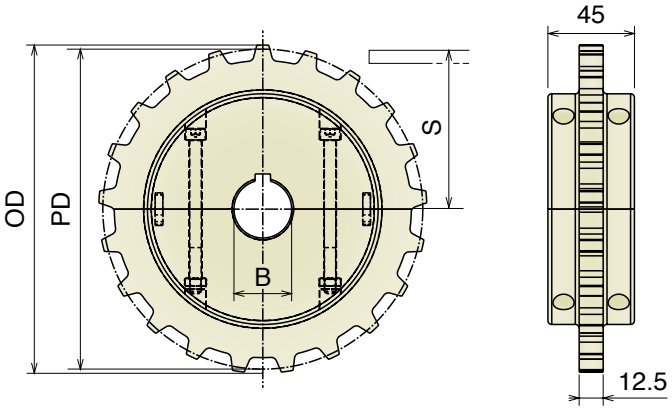

Part	Article-Nr.	Z-	Bore	PD	OD	S
1611	161101	16	25	130,2	130,6	58,7
1611	161102		30			
1611	161103		35			
1611	161104		40			
1611	161106		25* 25 ⍁			
1611	161107		30* 30 ⍁			
1611	161108		40* 40 ⍁			
1612	161201	18	25	146,3	146,9	66,8
1612	161202		30			
1612	161203		35			
1612	161204		40			
1612	161206		25* 25 ⍁			
1612	161207		30* 30 ⍁			
1612	161208		40* 40 ⍁			
1613	161301	21	25	170,4	170,7	78,8
1613	161302		30			
1613	161303		35			
1613	161304		40			
1613	161306		25* 25 ⍁			
1613	161307		30* 30 ⍁			
1613	161308		40* 40 ⍁			
1614	161401	25	25	202,7	204,2	95,0
1614	161402		30			
1614	161403		35			
1614	161404		40			
1614	161406		25* 25 ⍁			
1614	161407		30* 30 ⍁			
1614	161408		40* 40 ⍁			

Ruota rinvio divisa, fresata
Split idler sprocket, machined / geteiltes Umlenkrad, gefräst

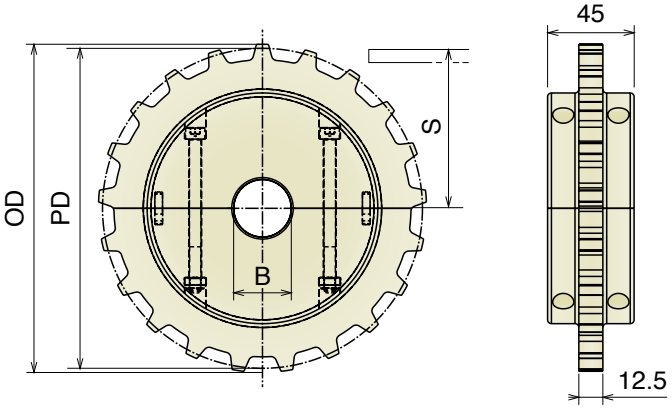

Part	Article-Nr.	Z-	Bore	PD	OD	S
1611	161150	16	18*	130,2	130,6	58,7
1611	161151		25			
1611	161152		30			
1611	161153		35			
1611	161154		40			
1612	161250	18	18*	146,3	146,9	66,8
1612	161251		25			
1612	161252		30			
1612	161253		35			
1612	161254		40			
1613	161350	21	18*	170,4	170,7	78,8
1613	161351		25			
1613	161352		30			
1613	161353		35			
1613	161354		40			
1614	161450	25	18*	202,7	204,2	95,0
1614	161451		25			
1614	161452		30			
1614	161453		35			
1614	161454		40			

Materiale / *Material* / *Materialien:* Machined Sp: Poliammide/Polyamide/Polyamid
Molded Sp: Poliammide rinforzato/Polyamide reinforced/Verstärktes Polyamid
Viti: Acciaio inox/*Screws: Stainless steel/Schrauben: Edelstahl*
Dadi: Ottone nichelato/*Nuts: Nickel plated brass/Mutter: Messing*

NEW

553 Ruota traino divisa, fresata
Split drive sprocket, machined / geteiltes Antriebskettenrad, gefräst

Part	Article-Nr.	Z-	Bore	PD	OD	S
1661	**166108**	12	40x40	98,1	97,6	44,5
1662	**166208**	15	40x40	122,2	121,9	56,5
1662	**166210**		60x60			
1663	**166308**	18	40x40	146,3	146,0	68,5
1663	**166310**		60x60			
1663	**166311**		65x65			

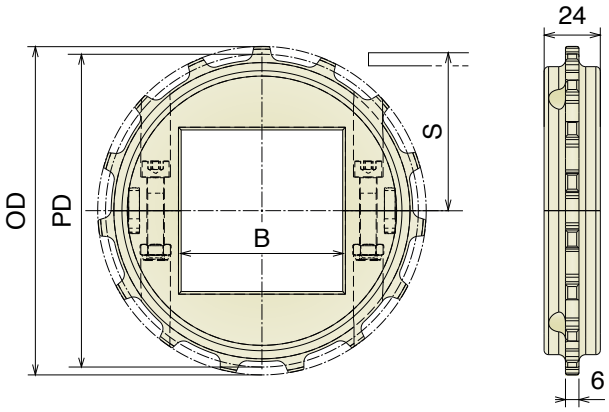

NEW

553 Ruota traino, stampata
drive sprocket, molded / Antriebskettenrad, gespritzt

Part	Article-Nr.	Z-	Bore	PD	OD	S
1665	**166511**	18	40x40	146,3	146,0	68,5
1665	**166510**		60x60			

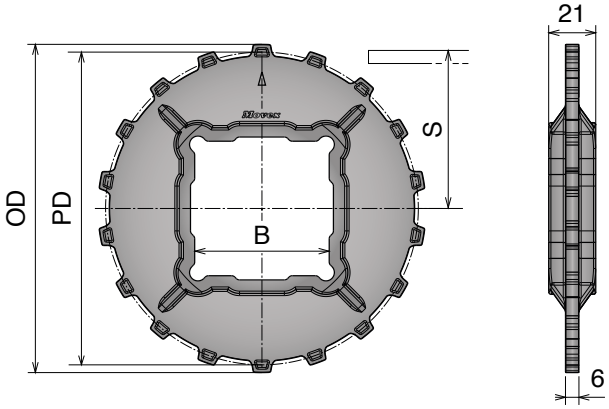

Oadby Core product range
Oadby Available from stock in Leicester
Easy Available from stock in Italy
Standard Produced to order in Italy
Movex

Materiale / *Material* / *Materialien:*
Poliammide/*Polyamide/Polyamid*
Viti: Acciaio inox/*Screws: Stainless steel/Schrauben: Edelstahl*
Dadi: ferro zincato/*Nuts: zinc plated steel/Mutter: verzinkter Stahl*

556 Ruota traino divisa, fresata
Split drive sprocket, machined / geteiltes Antriebskettenrad, gefräst

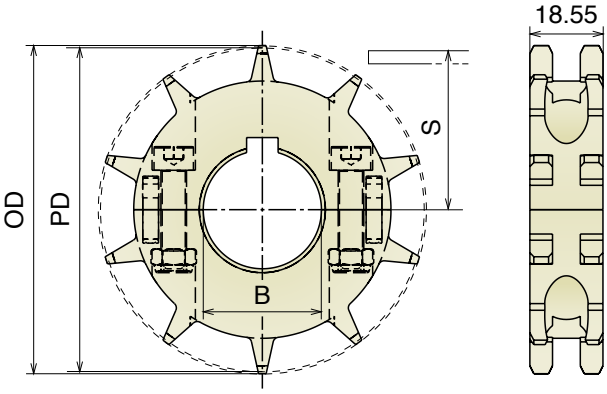

Part	Article-Nr.	Z-	Bore	PD	OD	S
1620	162001	10	25	82,2	83,3	33,0
1620	162002		30			
1620	162003E		35			
1620	162004E		40			
1620	162006		25* 25 ⍁			
1620	162007		30* 30 ⍁			
1620	162008E		40* 40 ⍁			
1621	162101	12	25	98,1	100,0	41,0
1621	162102		30			
1621	162103		35			
1621	162104		40			
1621	162106		25* 25 ⍁			
1621	162107		30* 30 ⍁			
1621	162108E		40* 40 ⍁			
1622	162201	15	25	122,2	124,3	53,0
1622	162202		30			
1622	162203		35			
1622	162204		40			
1622	162206		25* 25 ⍁			
1622	162207		30* 30 ⍁			
1622	162208		40* 40 ⍁			
1623	162301	18	25	146,3	147,8	65,0
1623	162302		30			
1623	162303		35			
1623	162304		40			
1623	162306		25* 25 ⍁			
1623	162307		30* 30 ⍁			
1623	162308		40* 40 ⍁			

Ruota rinvio divisa, fresata
Split idler sprocket, machined / geteiltes Umlenkrad, gefräst

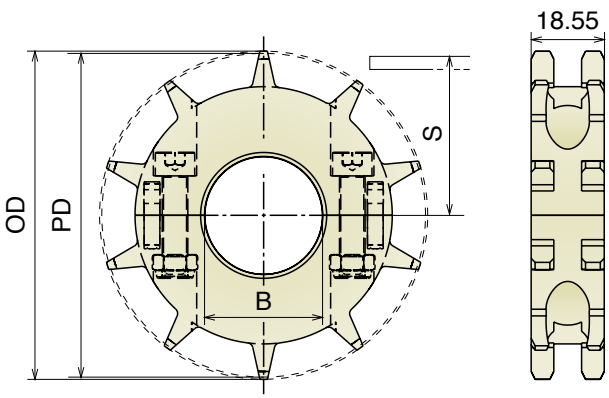

Part	Article-Nr.	Z-	Bore	PD	OD	S
1620	162050	10	18*	82,2	83,3	33,0
1620	162051		25			
1620	162052		30			
1620	162053E		35			
1620	162054E		40			
1621	162150	12	18*	98,1	100,0	41,0
1621	162151		25			
1621	162152		30			
1621	162153		35			
1621	162154		40			
1622	162250	15	18*	122,2	124,3	53,0
1622	162251		25			
1622	162252		30			
1622	162253		35			
1622	162254		40			
1623	162350	18	18*	146,3	147,8	65,0
1623	162351		25			
1623	162352		30			
1623	162353		35			
1623	162354		40			

Materiale / *Material* / *Materialien:*
Poliammide/*Polyamide/Polyamid*
Viti: Acciaio inox/*Screws: Stainless steel/Schrauben: Edelstahl*
Dadi: ferro zincato/*Nuts: zinc plated steel/Mutter: verzinkter Stahl*

260-261

Ruota traino divisa, fresata
Split drive sprocket, machined / geteiltes Antriebskettenrad, gefräst

Delivery: Easy Standard

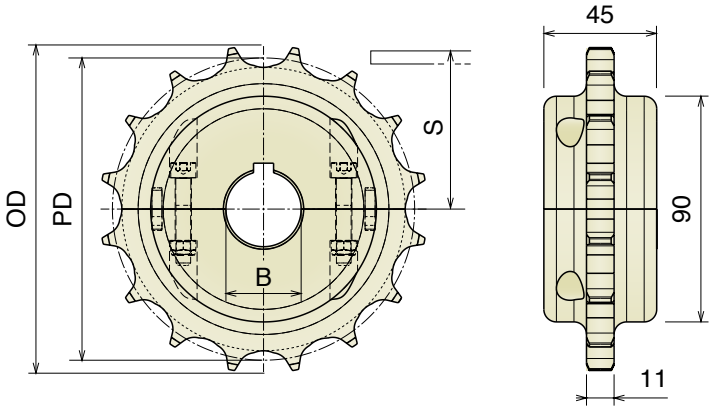

Part	Article-Nr.	Z-	Bore	PD	OD	S
1541	154101	16	25	128,9	130,9	67,8
1541	154102		30			
1541	154103		35			
1541	154104		40			
1542	154201	18	25	144,8	146,8	75,7
1542	154202		30			
1542	154203		35			
1542	154204		40			
1543	154301	19	25	154,3	156,3	80,5
1543	154302		30			
1543	154303		35			
1543	154304		40			

Ruota rinvio divisa, fresata
Split idler sprocket, machined / geteiltes Umlenkrad, gefräst

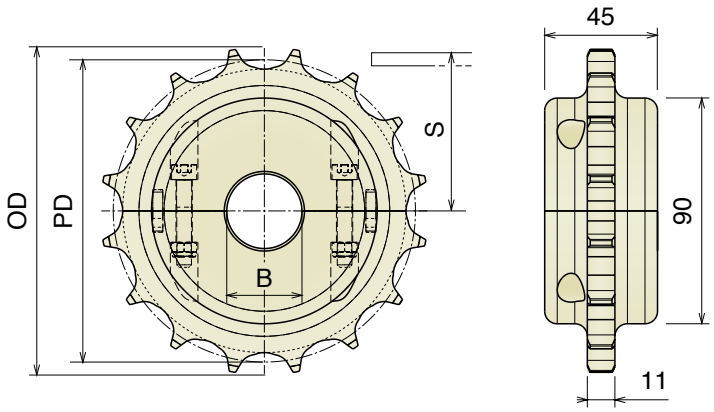

Part	Article-Nr.	Z-	Bore	PD	OD	S
1541	154150	16	18*	128,9	130,9	67,8
1541	154151		25			
1541	154152		30			
1541	154153		35			
1541	154154		40			
1542	154250	18	18*	144,8	146,8	75,7
1542	154251		25			
1542	154252		30			
1542	154253		35			
1542	154254		40			
1543	154350	19	18*	154,3	156,3	80,5
1543	154351		25			
1543	154352		30			
1543	154353		35			
1543	154354		40			

*Plain Bore

Oadby Core product range
Oadby Available from stock in Leicester
Easy Available from stock in Italy
Standard Produced to order in Italy
Movex

Materiale / *Material* / *Materialien:*
Poliammide rinforzato/Polyamide reinforced/Verstärktes Polyamid
Viti: Acciaio inox/*Screws: Stainless steel/Schrauben: Edelstahl*
Dadi: Ottone nichelato/*Nuts: Nickel plated brass/Mutter: Messing*

260-261

Ruota traino divisa, stampata
Split drive sprocket, molded / geteiltes Antriebskettenrad, gespritzt

Delivery: Easy Standard

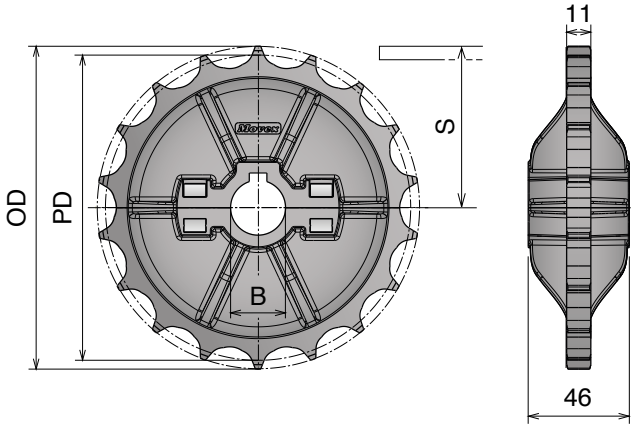

Part	Article-Nr.	Z-	Bore	PD	OD	S
1545	154501	16	25	128,9	130,9	67,8
1545	154502		30			
1545	154503		35			
1545	154504		40			
1545	154506		25* 25 ⎅			
1545	154507		30* 30 ⎅			
1545	154508		40* 40 ⎅			
1546	154601	18	25	144,8	146,8	75,7
1546	154602		30			
1546	154603		35			
1546	154604		40			
1546	154606		25* 25 ⎅			
1546	154607		30* 30 ⎅			
1546	154608		40* 40 ⎅			
1547	154701	19	25	154,3	156,3	80,5
1547	154702		30			
1547	154703		35			
1547	154704		40			
1547	154706		25* 25 ⎅			
1547	154707		30* 30 ⎅			
1547	154708		40* 40 ⎅			

Ruota rinvio divisa, stampata
Split idler sprocket, molded / geteiltes Umlenkrad, gespritzt

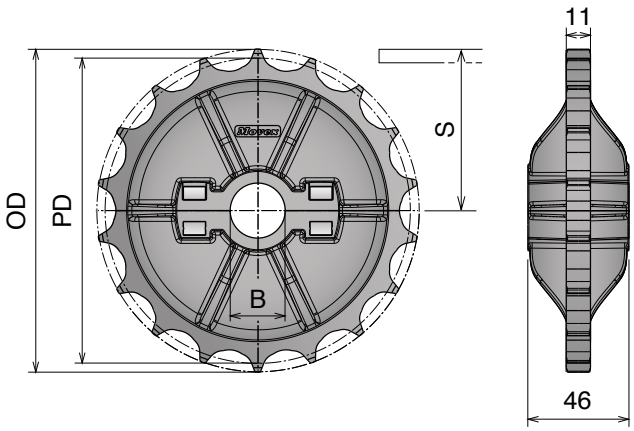

Part	Article-Nr.	Z-	Bore	PD	OD	S
1545	154551	16	25	128,9	130,9	67,8
1545	154552		30			
1545	154553		35			
1545	154554		40			
1546	154651	18	25	144,8	146,8	75,7
1546	154652		30			
1546	154653		35			
1546	154654		40			
1547	154751	19	25	154,3	156,3	80,5
1547	154752		30			
1547	154753		35			
1547	154754		40			

Materiale / *Material* / *Materialien:*
Poliammide/*Polyamide/Polyamid*
Viti: Acciaio inox/*Screws: Stainless steel/Schrauben: Edelstahl*
Dadi: ferro zincato/*Nuts: zinc plated steel/Mutter: verzinkter Stahl*

600 Ruota traino divisa, fresata
Split drive sprocket, machined / geteiltes Antriebskettenrad, gefräst

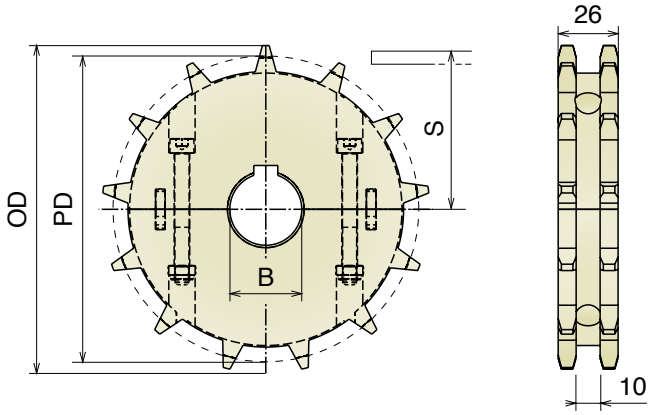

Part	Article-Nr.	Z-	Bore	PD	OD	S
1571	157101	10	25	102,8	107,7	45,0
1571	157102		30			
1571	157103		35			
1571	157104		40			
1572	157201	13	25	132,7	138,8	60,0
1572	157202		30			
1572	157203		35			
1572	157204		40			
1573	157301	15	25	152,7	159,4	70,0
1573	157302		30			
1573	157303		35			
1573	157304		40			
1574	157401	16	25	162,8	169,6	75,0
1574	157402		30			
1574	157403		35			
1574	157404		40			

Ruota rinvio divisa, fresata
Split idler sprocket, machined / geteiltes Umlenkrad, gefräst

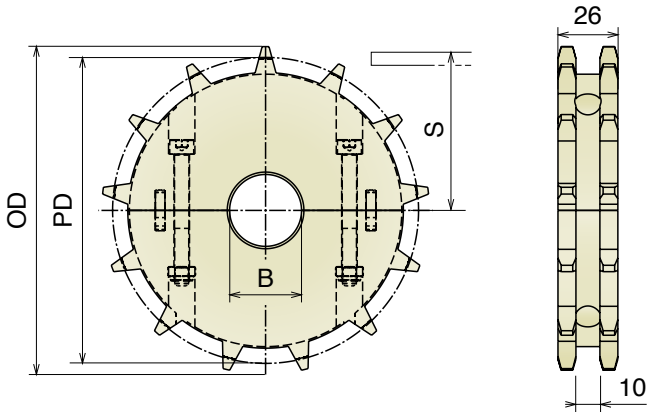

Part	Article-Nr.	Z-	Bore	PD	OD	S
1571	157150	10	18*	102,8	107,7	45,0
1571	157151		25			
1571	157152		30			
1571	157153		35			
1571	157154		40			
1572	157250	13	18*	132,7	138,8	60,0
1572	157251		25			
1572	157252		30			
1572	157253		35			
1572	157254		40			
1573	157350	15	18*	152,7	159,4	70,0
1573	157351		25			
1573	157352		30			
1573	157353		35			
1573	157354		40			
1574	157450	16	18*	162,8	169,6	75,0
1574	157451		25			
1574	157452		30			
1574	157453		35			
1574	157454		40			

*Plain Bore

Oadby Core product range
Oadby Available from stock in Leicester
Easy Available from stock in Italy
Standard Produced to order in Italy
Movex

Materiale / *Material / Materialien:*
Poliammide/*Polyamide/Polyamid*
Viti: Acciaio inox/*Screws: Stainless steel/Schrauben: Edelstahl*
Dadi: ferro zincato/*Nuts: zinc plated steel/Mutter: verzinkter stahl*

600 Support sprocket

Ruota traino divisa, fresata
Split drive sprocket, machined / geteiltes Antriebskettenrad gefräst

Designed to support Small radius section

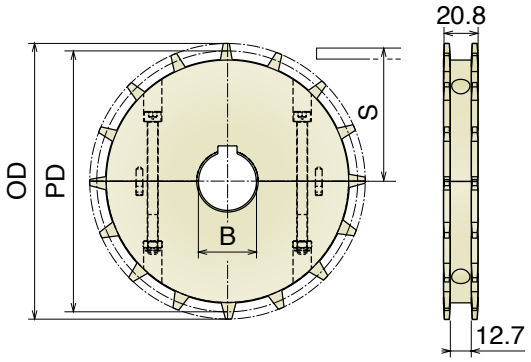

Article-Nr.	Z-	Bore	PD	OD	S
157101SR	10	25	102,8	107,7	45,0
157102SR		30			
157103SR		35			
157104SR		40			
157201SR	13	25	132,7	138,8	60,0
157202SR		30			
157203SR		35			
157204SR		40			
157301SR	15	25	152,7	159,4	70,0
157302SR		30			
157303SR		35			
157304SR		40			
157401SR	16	25	162,8	169,6	75,0
157402SR		30			
157403SR		35			
157404SR		40			

Ruota rinvio divisa, fresata
Split idler sprocket, machined / geteiltes Umlenkrad, gefräst

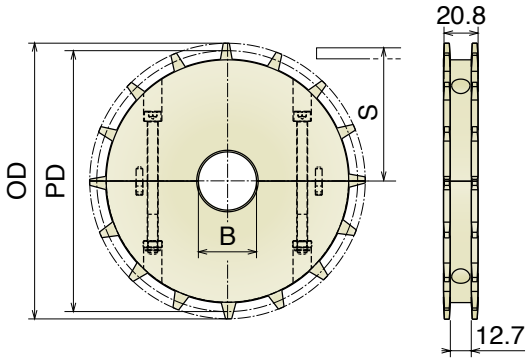

Article-Nr.	Z-	Bore	PD	OD	S
157150SR	10	18*	102,8	107,7	45,0
157151SR		25			
157152SR		30			
157153SR		35			
157154SR		40			
157250SR	13	18*	132,7	138,8	60,0
157251SR		25			
157252SR		30			
157253SR		35			
157254SR		40			
157350SR	15	18*	152,7	159,4	70,0
157351SR		25			
157352SR		30			
157353SR		35			
157354SR		40			
157450SR	16	18*	162,8	169,6	75,0
157451SR		25			
157452SR		30			
157453SR		35			
157454SR		40			

*Plain Bore

600 Split support roller

Ruota rinvio liscia, divisa, fresata
Split idler wheel, machined / geteilte Umlenkrolle, gefräst

Designed to support Small radius section

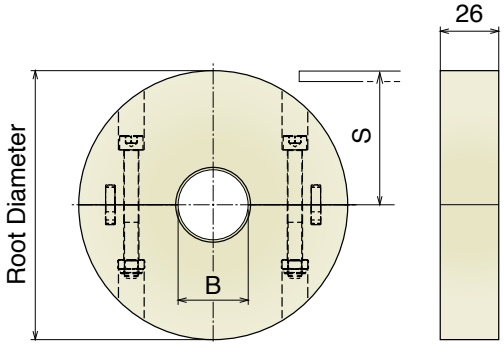

Article-Nr.	Z- eq.	Bore	Root Ø	S
157150R	10	18*	85,1	45,0
157151R		25		
157152R		30		
157153R		35		
157154R		40		
157250R	13	18*	115,0	60,0
157251R		25		
157252R		30		
157253R		35		
157254R		40		
157350R	15	18*	134,3	70,0
157351R		25		
157352R		30		
157353R		35		
157354R		40		
157450R	16	18*	146,8	75,0
157451R		25		
157452R		30		
157453R		35		
157454R		40		

Fix split support roller with split collars
Part 215 Pag 445

Materiale / *Material* / *Materialien:*
Poliammide/*Polyamide/Polyamid*

ZERO CONTACT

Ruota traino, fresata
Drive sprocket, machined / Antriebskettenrad, gefräst

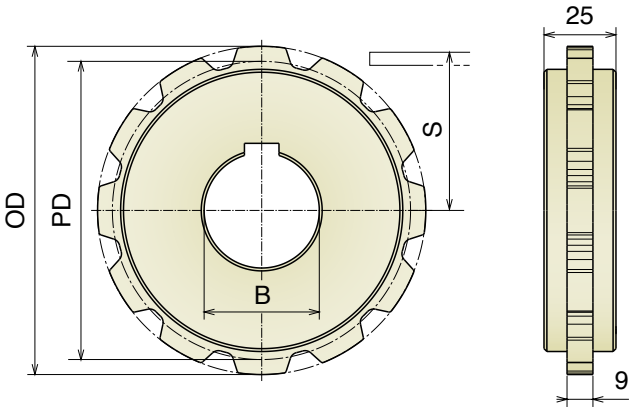

Part	Article-Nr.	Z-	Bore	R_i+50	PD	OD	S
1624	162401	12	40	650	58,0	61,0	25,6
1624	162402			750	66,0	69,0	29,9
1624	162403			850	76,0	79,0	34,2
1624	162404			950	84,0	86,0	38,5
1624	162405			1050	94,0	97,0	42,8
1624	162406			1150	102,0	104,0	47,1
1624	162407			1250	112,0	114,0	51,4
1624	162408			1350	119,0	122,0	55,7
1624	162409			1450	130,0	132,0	60,0
1624	162410			1550	137,0	140,0	64,3
1624	162411			1650	145,0	148,0	68,6
1624	162412			1750	154,0	157,0	72,9
1624	162413			1850	163,0	166,0	77,2
1624	162414			1950	171,0	174,0	81,5
1624	162415			2050	180,0	183,0	85,8
1624	162416			2150	189,0	192,0	90,1

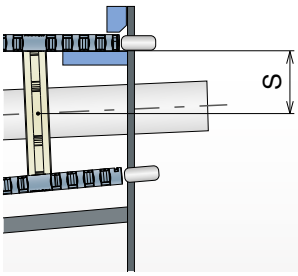

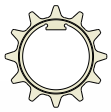

Smallest sprocket with integrated key valid only for code 162401

NOTE: in order to install the smallest sprockets a shaft key way continued to the end of the shaft is required.

ZERO CONTACT PRO

Ruota traino, fresata
Drive sprocket, machined / Antriebskettenrad, gefräst

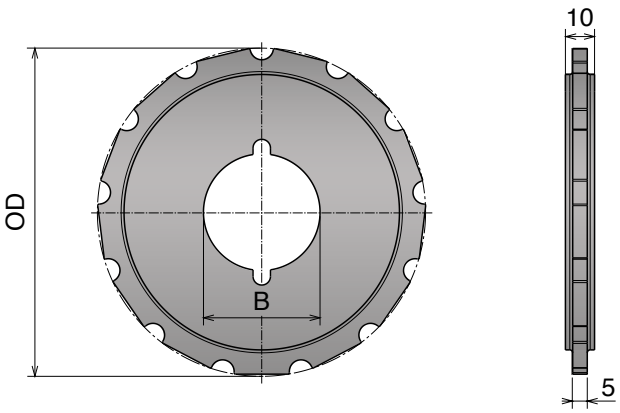

Part	Article-Nr.	Z-	Bore	OD
1633	163301	13	30	45,9
1633	163302			52,0
1633	163303		40	58,0
1633	163304			64,1
1633	163305			70,2
1633	163306			76,2
1633	163307			82,3
1633	163308			88,3
1633	163309			94,4
1633	163310			100,5
1633	163311			106,6
1633	163312			112,6
1633	163313			118,7
1633	163314			124,7
1633	163315			130,8
1633	163316			136,9
1633	163317			142,9

Oadby Core product range
Oadby Available from stock in Leicester
Easy Available from stock in Italy
Standard Produced to order in Italy

Movex®

500 RR

Ruota traino, stampata
Drive sprocket, molded / Antriebskettenrad, gespritzt

Delivery: Easy Standard

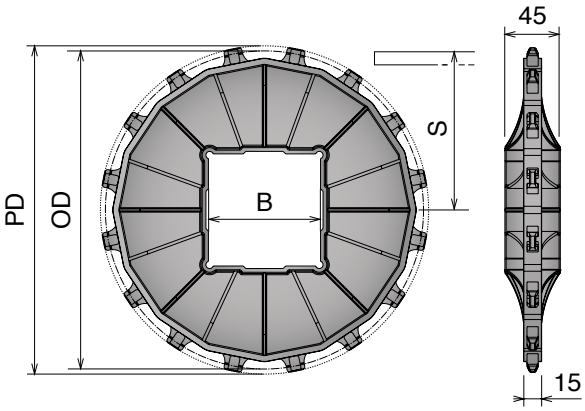

Part	Article-Nr.	Z-	Bore	PD	OD	S
1551	155104	10	Ø40	164,4	163,1	74,2
1551	155105		Ø50			
1551	155106		40x40			
1551	155107		60x60			
1551	155108		65x65			
1552	155204	12	Ø40	196,3	196,3	90,1
1552	155206		40x40			
1552	155207		60x60			
1552	155208		65x65			
1553	155311	13	Ø65	212,3	213,6	98,1
1553	155310		Ø90			
1553	155306		40x40			
1553	155307		60x60			
1553	155308		65x65			
1553	155309		90x90			
1559	155910	16	Ø90	260,4	262,0	122,3
1559	155908		65x65			
1559	155909		90x90			
1559	155912		120x120			

Ruota traino, fresata
Drive sprocket, machined / Antriebskettenrad, gefräst

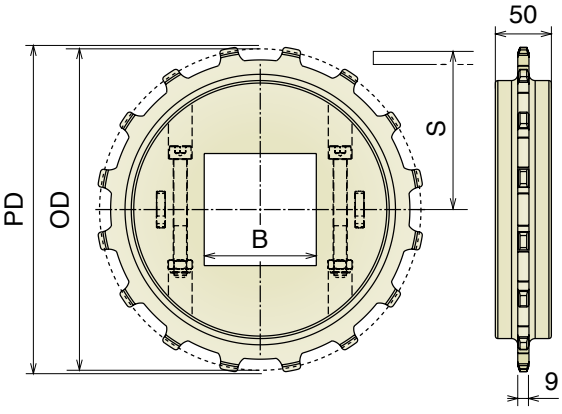

Part	Article-Nr.	Z-	Bore	PD	OD	S
1607	160704	10	Ø40	164,4	163,1	74,2
1607	160705		Ø50			
1607	160706		40x40			
1607	160707		60x60			
1607	160708		65x65			
1608	160804	12	Ø40	196,3	196,3	90,1
1608	160806		40x40			
1608	160807		60x60			
1608	160808		65x65			
1609	160911	13	Ø65	212,3	209,0	98,1
1609	160910		Ø90			
1609	160906		40x40			
1609	160907		60x60			
1609	160908		65x65			
1609	160909		90x90			
1610	161010	16	Ø90	260,4	262,0	122,3
1610	161005		Ø2,5"			
1610	161008		65x65			
1610	161009		90x90			
1610	161012E		120x120			

Materiale / *Material / Materialien:*
Resina acetalica/*Acetal resin/Azetal*
Viti: Acciaio inox/*Screws: Stainless steel/Schrauben: Edelstahl*
Dadi: Acciaio inox/*Nuts: Stainless steel/Mutter: Edelstahl*

500 RR *Split Version*

Ruota traino, stampata/*Drive sprocket, molded / Antriebskettenrad, gespritzt*

Delivery: Easy Standard

Part	Article-Nr.	Z-	Bore	PD	OD	S
1558	155810	16	Ø 90 with double keyway	260,4	262,0	122,3

Advantages:

- Easy clean
- Easy installation
- Heavy duty design

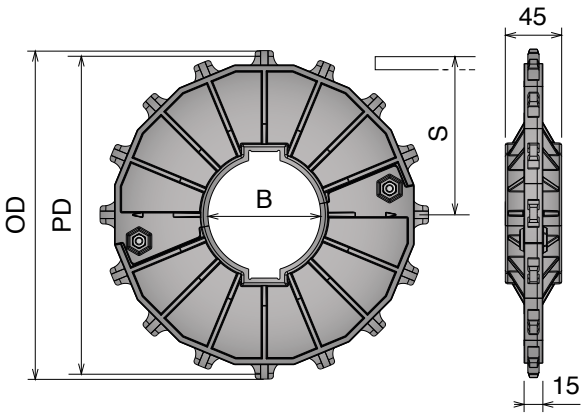

Ruota rinvio divisa, stampata
Split idler sprocket, molded / geteiltes Umlenkrad, gespritzt

Part	Article-Nr.	Z-	Bore (B)	Bore (B_1 x B_1)	PD	OD	S
1558	155809	16	Ø 100	90 x 90	260,4	262,0	122,3

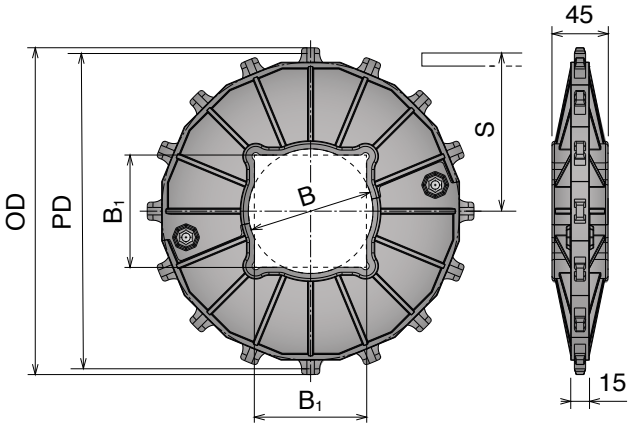

Oadby Core product range
Oadby Available from stock in Leicester
Easy Available from stock in Italy
Standard Produced to order in Italy

Movex®

Movex® EXTRUSION CENTER

We extrude for your business.

Movex® is a dynamic and flexible business reality that have been active in the industrial production for over ten years and is reaching market leadership as a reliable and precise supplier, planning the future without losing sight of its history and the values that allow its growth.

In the dedicated extrusion center from our production plant in Castelli Calepio (Italy), **Movex®** provides a new generation of high-performing profiles, developed and produced with the most updated technologies. Experienced engineers work around the clock on more than 50 extrusion machines (horizontal and vertical) to perfect almost 2000 high quality products for our customer needs.

Movex® meets your needs for standard and custom made products in a dynamic and responsive way, ensuring the best performance to satisfy our customer requirements.

Choose the one that best suits you.

Each of the hundreds **Movex®** profiles are produced from a first rate of **UHMW-PE** with the possibility to further enhance performance by using our patented materials **BluLub®** and **Titanium White®**.

Transportation is a delicate phase for your shipment; to ship your order we choose the correct protection: carton, coils, reinforced wooden crate, packaging varies depending on the article typology, its size and its weight.

Standard or customized extrusion...your choice.

Movex® is driven by the will to design and manufacture top quality items, combining technical performance and design, in order to offer its customers a tailor made service.

Beside of the standard available profiles, **Movex®** is also developing together with the customer innovative special solutions to offer *"the product you need when you need it"* against an attractive price. We have organized a specific workflow, developed over the course of the last ten years, which aims to satisfy the requirements of even the most demanding buyer. Get in touch with us and ask a personalised quotation.

BluLub®

Choose the performance of innovative material.

BluLub® is the Movex super-performance compounded Ultra High Molecular Weight Polyethylene material, with the latest generation of solid lubricants, able to contribute improving PV-properties (limiting pressure velocity) compared to standard UHMW-PE, especially in applications with limited lubrication, higher speeds and/or higher loads.

BluLub® ensures high wear and abrasion resistance, requires less energy and with the lowest coefficient of friction, improves the product stability and wear life of sliding parts.

Thanks to the **BluLub®** characteristics, the extruded profiles can also offer a longer wear life, compared to traditional materials, and will help reducing marks over products or goods sliding on them; at the same time, **BluLub®** is also ideal for extreme conditions in terms of load and speed.

More material information and technical data sheet can be provided on request, get in touch with us for a quick support.

The right choice for:

- Lowest coefficient of friction
- Reduced noise and squeaking
- Lowest wear and minimized energy consumption
- Minimal moisture absorption
- Extreme material performances
- Best lubricant distribution

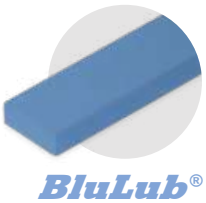

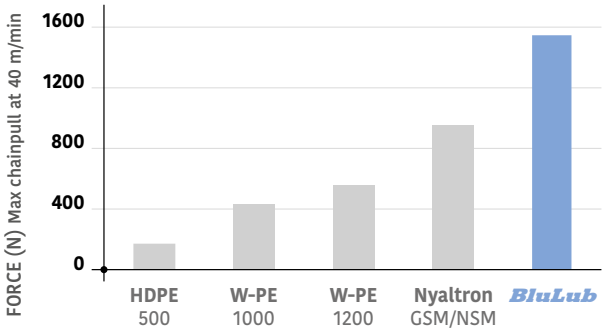

PV LIMIT - Comparison table

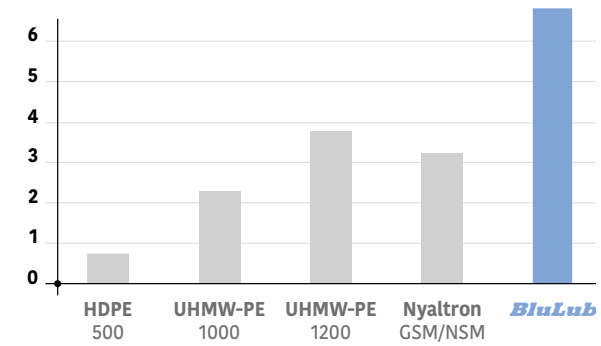

RELATIVE WEARLIFE - Comparison table

BluLub® is available for any type of profile, standard or custom.

Properties:

- UHMW-PE Polyethylene with molecular density 9,200,000 g/mol.
- Operating temperature: -40 to + 80°C (-40 to 176°F)
- Linear expansion coefficient: 2 x 10-4°C-1 (1.1 x 10-4 °F-1)

FDA Approved

Titanium White®

High quality, bright white extrusions.

Titanium White® is the latest addition in the Movex's extrusion compound family.

The name ***Titanium White®*** refers to the special metal because it has comparable unique properties, like high strength and optimum performance, generating low friction, absorbing heat and reducing energy consumption.

Titanium White® has a long lasting bright white color and keeps performances also after many hours of work. Thanks to the ***Titanium White®*** characteristics, the extruded profiles are made of an intense white UHMW-PE, resulting in a smoother surface and devoid of push marks, meaning in a minimized power consumption and possible goods defect. ***Titanium White®*** has also an improved UV and aging resistance and a high chemical resistance.

More material information and technical datasheets can be provided on request, get in touch with us for a quick support.

The right choice for:

- Lower coefficient of friction
- Lower wear and less energy consumption
- Minimal moisture absorption
- UV & aging resistance
- High chemical resistance

Ti-White®

22 $3d^2 4s^2$

TI Titanium

47.867

Strong metal with low density that is quite ductile, lustrous and metallic white in color.

All these features reflect our extruded profiles with ***TI-White*** compound.

Ti-White (Example of application)

Titanium White® is available for any type of profile, standard or custom.

Properties:

- UHMW-PE Polyethylene with molecular density 9,200,000 g/mol.
- Operating temperature: -40 to + 80°C (-40 to 176°F)
- Linear expansion coefficient: 2 x 10-4°C-1 (1.1 x 10-4 °F-1)

FDA Approved

UHMW-PE

Standard extrusion polyethylene.

Standard profiles are all made with a first-rate **UHMW-PE** polyethylene, a thermoplastic polymer with a variable crystalline structure with a vast range of applications.

UHMW-PE is available in several colors and lengths. It's the perfect choice to reach your line-performance against an attractive price.

The right choice for:

- Low coefficient of friction
- Good resistance to wear consumption
- Attractive market price
- Long durability

UHMW-PE is available for any type of profile, standard or custom.

Properties:

- UHMW-PE Polyethylene with molecular density 5,600,000 g/mol.
- Operating temperature: -40 to + 80°C (-40 to 176°F)
- Linear expansion coefficient: 2 x 10-4°C-1 (1.1 x 10-4 °F-1)

Standard colors*:

Black

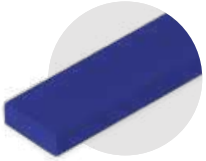

Blue

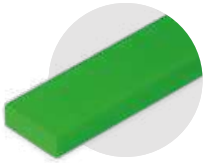

Green

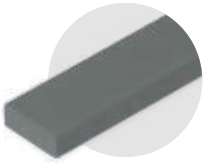

Grey

*Other colors are available on request.

Movex

Material selection

Movex offers different materials and design solution for each customer requirements.
These comparison tables help to better understand each material and take advantage of their strengths and features to suit your specific needs:

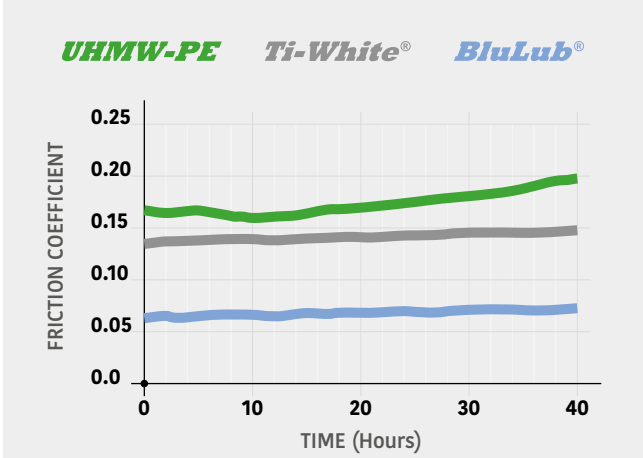

FRICTION EFFECT - Comparison table

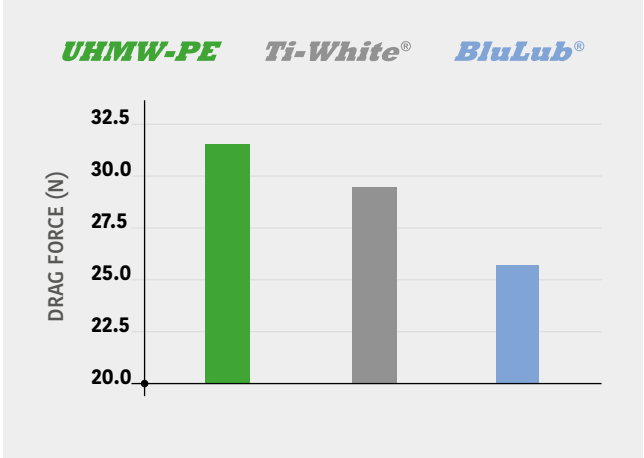

DRAG FORCES EFFECT - Comparison table

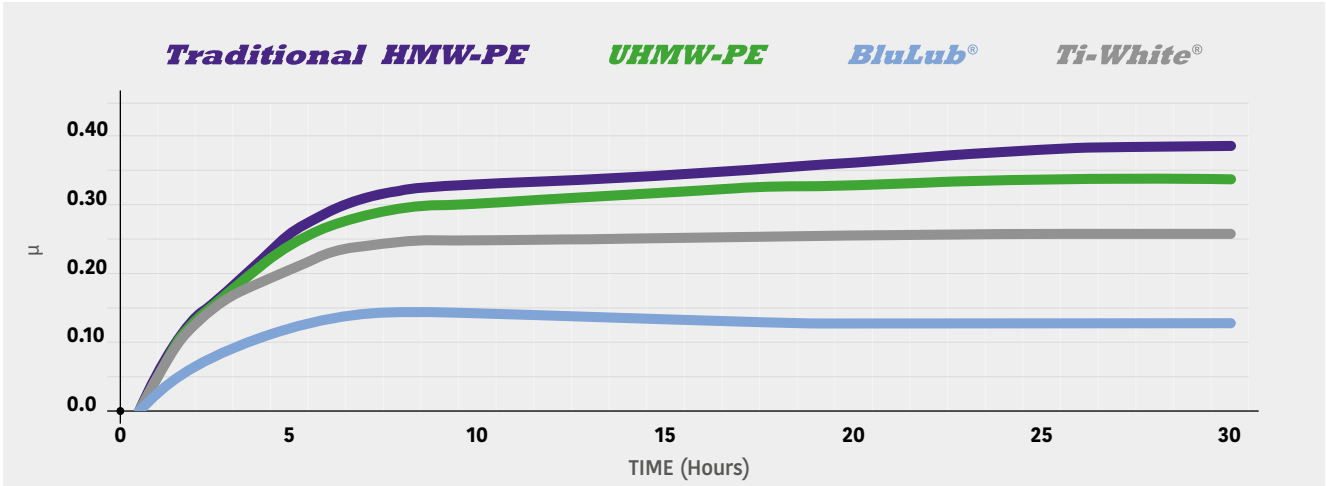

COEFFICENT OF SLIDING FRICTION - 0,1 m/s - 0,1 MpA with POM

Ti-White® VS Traditional HMW-PE

IMPROVED RESISTANCE

This material can keep its color properties stable during the time. Moreover, titanium gives better sliding properties than traditional material.

BluLub® VS Traditional HMW-PE

ENERGY SAVING

Thanks to the unique solid lubricant added into the material, the sliding properties are excellent and energy consumption will be reduced.

RS SIDE GUIDE RAIL

Easy and modular replacement label saver system.

RS Side guide profile is a development which enable you to simplify your business!

Thanks to the replaceable wear-strip in ***BluLub®***, ***RS Side guide profile*** can reduce total cost of ownership: in case of required maintenenace, only ***BluLub®*** strips can be replaced, saving time at a lower cost.

Different profiles are available from stock and can be mounted in different ways to optimize the support of your product according to the specific needs.

RS Side guide rail profiles
are available in various executions.

Increased performance

BluLub® wearstrips contribute to a lower friction which results in less energy consumption.

Fast and easy maintenance

Thanks to its innovative design, the easy replaceable ***BluLub®*** wearstrips meets the needs to reduce maintenance time.

Interchangeable wearstrip

Every ***BluLub®*** wearstrip has the same fixing system, this makes all versions interchangeable. In case of required replacement, wearstrips can be ordered as coiled spare parts.

No gap between connection

BluLub® wearstrip allows you to connect two or more different base profiles with no gap, by simply slide it in.

The right choice for:

- Innovative equipment
- Total cost reduction
- Less energy consumption
- Improved product stability

Materials:

• Base profile: ***UHMW-PE*** (see details).
• Label saver: ***BluLub®*** polyethylene UHMW-PE with molecular density 9,200,000 g/mo. with reduced coefficient of friction and higher wear resistence and its complies with the code of Federal Regulations of FDA (see details).

341

L-Profile

See product page for specific details and materials available.

1094

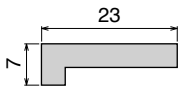

Pag 350

175

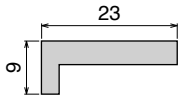

Pag 350

1038

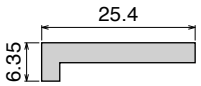

Pag 350

150

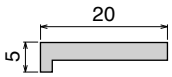

Pag 350

1058

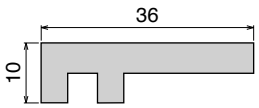

Pag 351

174

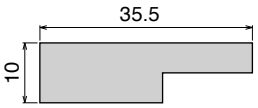

Pag 351

Z-Profile

See product page for specific details and materials available.

101

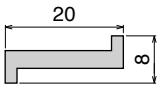

Pag 351

102

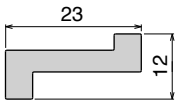

Pag 352

102

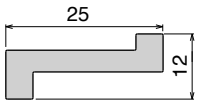

Pag 352

176

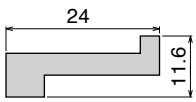

Pag 352

1074

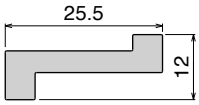

Pag 353

Material Info:

pg. 336->340

Special shape

See product page for specific details and materials available.

107

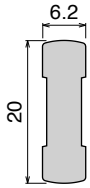

Pag 353

108

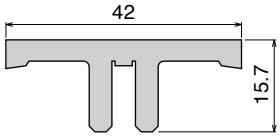

Pag 353

105

A: 20/25/30/40/50/60/70/100
B: 3,5

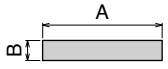

Pag 354

106

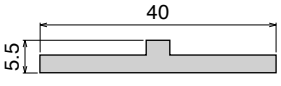

Pag 354

J-Profile

See product page for specific details and materials available.

103 Fit on 2,5 to 3,5 mm

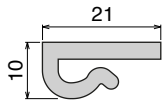

Pag 355

104 Fit on 2,5 to 3,5 mm

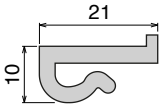

Pag 355

179 Fit on 2,5 to 3,5 mm

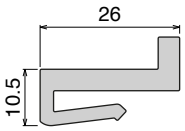

Pag 355

1014 Fit on 3 mm

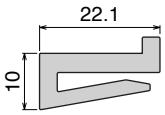

Pag 356

1015 Fit on 2,5 to 3,5 mm

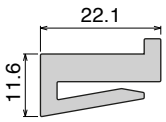

Pag 356

1016 Fit on 3 mm

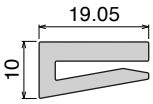

Pag 356

1017 Fit on 3 mm

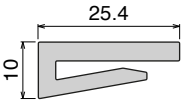

Pag 357

1018 Fit on 3 mm

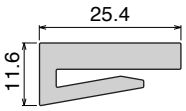

Pag 357

1019 Fit on 3 mm

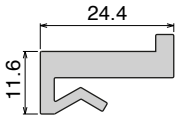

Pag 357

1020 Fit on 3 mm

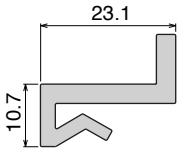

Pag 358

1068 Fit on 1,8 to 2 mm

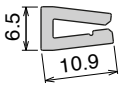

Pag 358

1090 Fit on 1,8 to 2 mm

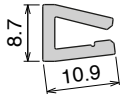

Pag 358

1021 Fit on 3 mm

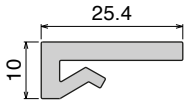

Pag 359

1022 Fit on 3 mm

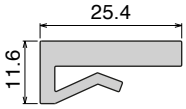

Pag 359

1023 Fit on 3 mm

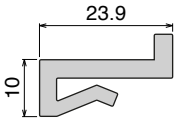

Pag 359

1024 Fit on 3 mm

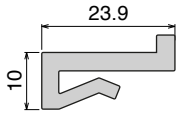

Pag 360

1025 Fit on 3 mm

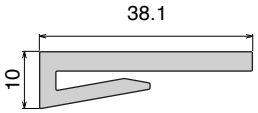

Pag 360

1026 Fit on 3 mm

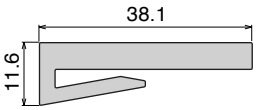

Pag 360

1027 Fit on 3 mm

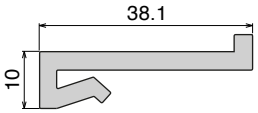

Pag 361

1028 Fit on 3 mm

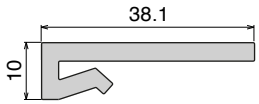

Pag 361

1046 Fit on 3 mm

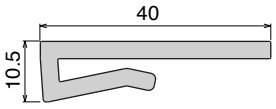

Pag 361

1029 Fit on 3 mm

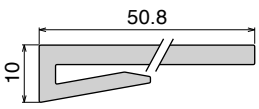

Pag 362

1030 Fit on 3 mm

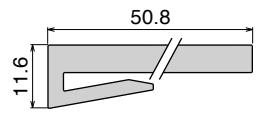

Pag 362

1031 Fit on 3 mm

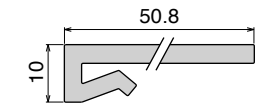

Pag 362

1032 Fit on 3 mm

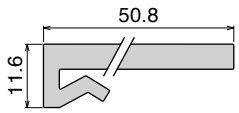

Pag 363

1035 Fit on 3 mm

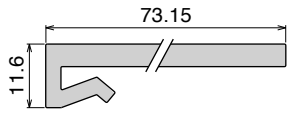

Pag 363

1033 Fit on 3 mm

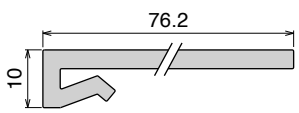

Pag 363

1034 Fit on 3 mm

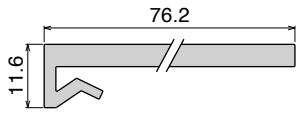

Pag 364

Movex

U-Profile

See product page for specific details and materials available.

109

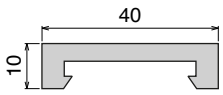

Pag 364

110

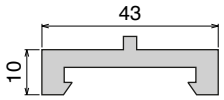

Pag 365

156

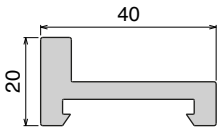

Pag 365

156

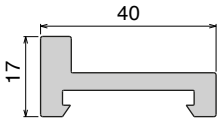

Pag 365

149

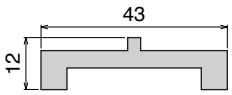

Pag 366

177

Pag 366

1059

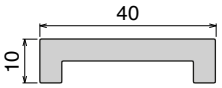

Pag 367

178

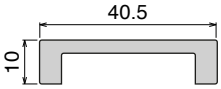

Pag 367

111

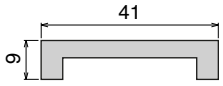

Pag 368

1060

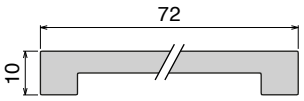

Pag 368

199

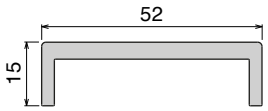

Pag 369

199

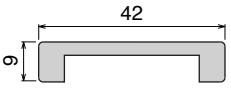

Pag 369

199 Staggered

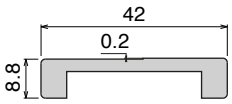

Pag 369

1080

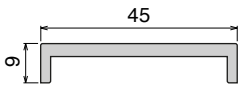

Pag 370

1081

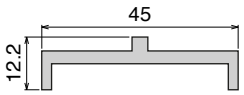

Pag 370

133

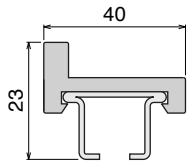

Pag 371

148

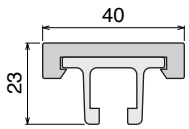

Pag 371

157

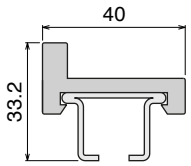

Pag 372

157

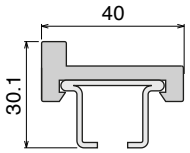

Pag 372

118 Stainless steel

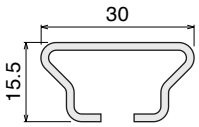

Pag 373

112 Stainless steel

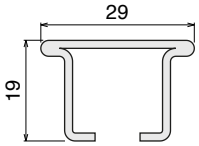

Pag 373

147 Aluminum

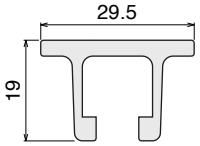

Pag 373

C-Profile

See product page for specific details and materials available.

1041 Fit on 25 x 5 mm

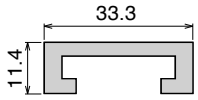

Pag 374

1082 Fit on 38,1 x 6,35 mm

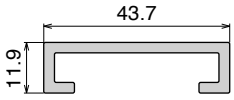

Pag 374

1044 Fit on 38,1 x 12,7 mm

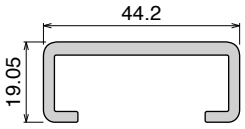

Pag 374

1053 Fit on 38,1 x 6,35 mm

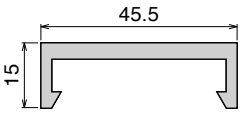

Pag 375

1054 Fit on 38,1 x 6,35 mm

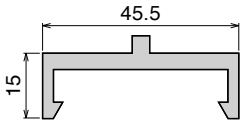

Pag 375

137 Fit on 40 x 8 mm

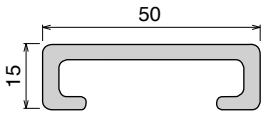

Pag 375

137 Fit on 40 x 8 mm

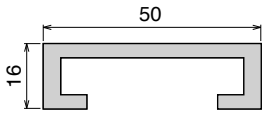

Pag 376

137 Fit on 40 x 8 mm

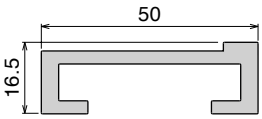

Pag 376

1042 Fit on 50 x 6 mm

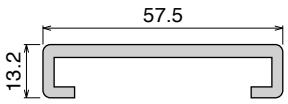

Pag 376

1045 Fit on 50,8 x 12,7 mm

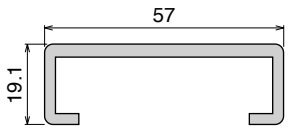

Pag 377

158 Fit on 50 x 6 mm

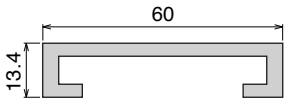

Pag 377

163 See dimension available
Used with Part. 164/165

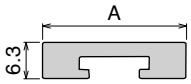

Pag 378

160 Used with Part. 164/165

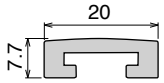

Pag 379

161 Used with Part. 164/165

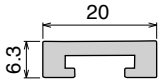

Pag 379

162 Used with Part. 164/165

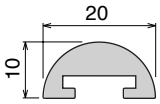

Pag 380

164 Aluminum

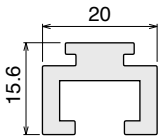

Pag 380

165 Aluminum

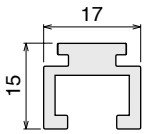

Pag 380

1039

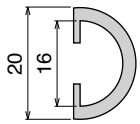

Pag 381

1083

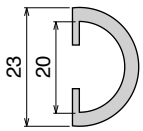

Pag 381

166
ØA: 8/10/12/16
ØB: 12/14/16/20

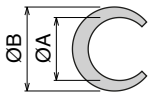

Pag 382

154

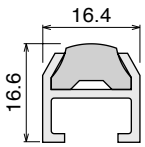

Pag 382

155

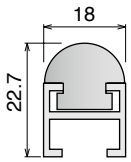

Pag 383

134

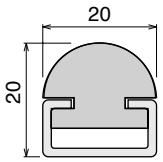

Pag 383

Transfer plate and NoseBar

See product page for specific details and materials available.

199 Fit on 3 mm

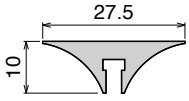

Pag 384

238

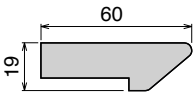

Pag 384

228

Pag 384

235

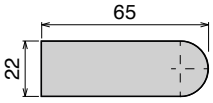

Pag 384

Movex

Bar cap and cover

See product page for specific details and materials available.

1000
Fit on 1,5 mm

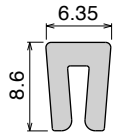

Pag 385

1001
Fit on 1,5 mm

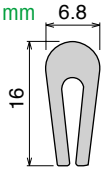

Pag 385

1002
Fit on 3 mm

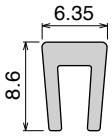

Pag 385

1003
Fit on 3 mm

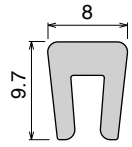

Pag 385

1004
Fit on 3 mm

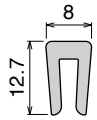

Pag 386

1084
Fit on 3 mm

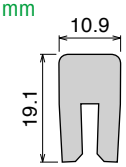

Pag 386

1085
Fit on 3 mm

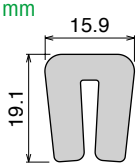

Pag 386

153
Fit on 4/5 mm

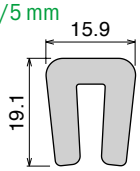

Pag 387

1006
Fit on 5 mm

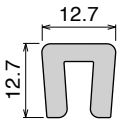

Pag 387

1007
Fit on 5 mm

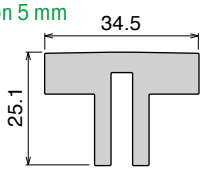

Pag 387

1095
Fit on 4 mm

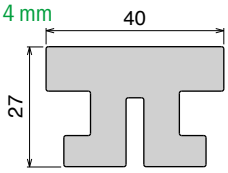

Pag 388

1040
Fit on 3 mm

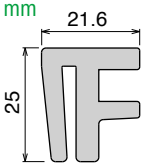

Pag 388

1008
Fit on 5 mm

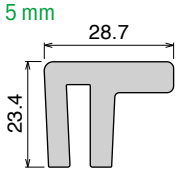

Pag 388

1009
Fit on 6 mm

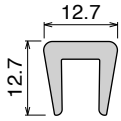

Pag 389

1010
Fit on 6 mm

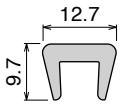

Pag 389

1086
Fit on 8 mm

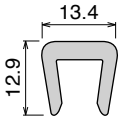

Pag 389

1011
Fit on 10 mm

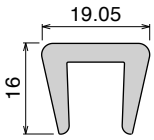

Pag 389

1013
Fit on 10 mm

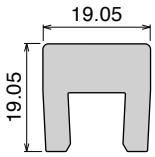

Pag 390

1012
Fit on 12/13 mm

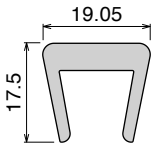

Pag 390

181 Fit on 25,4 x 25,4 mm

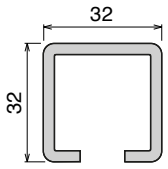

Pag 390

1052 Fit on 38,1 x 50,8 mm

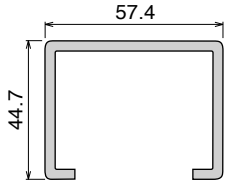

Pag 391

180 Fit on 30,5 x 46 mm

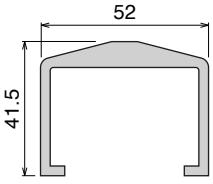

Pag 391

Side guide rail USED WITH PLATE

See product page for specific details and materials available.

1063
Fit on mm
30 x 4

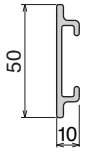

Pag 392

137
Fit on mm
40 x 8

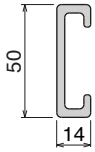

Pag 392

137
Fit on mm
40 x 10

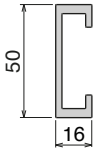

Pag 393

158
Fit on mm
40 x 10

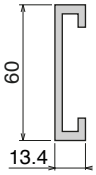

Pag 393

1064
Fit on mm
55 x 4

Pag 394

183
Fit on mm
40 x 8

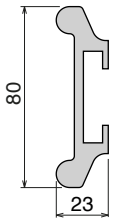

Pag 394

158
Fit on mm
50 x 6

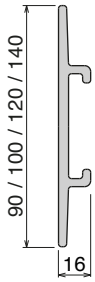

Pag 395

194 Label saver
Fit on mm
50 x 6

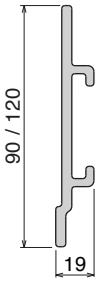

Pag 395

189
Fit on mm
40 x 8

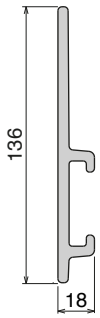

Pag 396

189 Label saver
Fit on mm
40 x 8

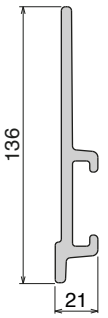

Pag 396/397

1079 RS
Fit on mm
40 x 8

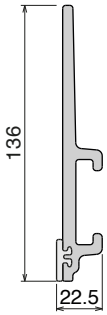

Pag 397

1079 RS
Fit on mm
40 x 8

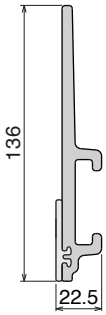

Pag 397

189
Fit on mm
50 x 6

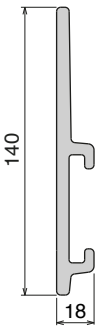

Pag 398

189 Label saver
Fit on mm
50 x 6

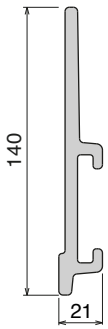

Pag 398/399

1096
Fit on mm
50 x 5

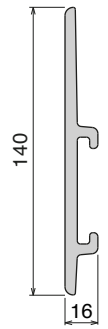

Pag 399

Movex

Side guide rail USED WITH PLATE AND CLAMP

See product page for specific details and materials available.

135
Fit on mm
60 x 6

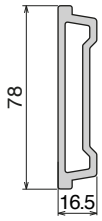

Pag 400

136
Fit on mm
60 x 6

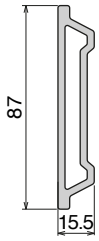

Pag 400

1057
Fit on mm
50 x 6

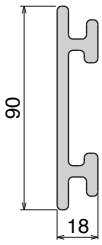

Pag 401

1077 Label saver
Fit on mm
50 x 6

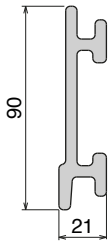

Pag 401

1077 RS
Fit on mm
50 x 6

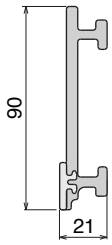

Pag 402

1078 RS
Fit on mm
50 x 6

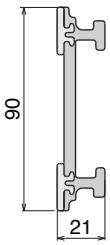

Pag 402

1057
Fit on mm
60 x 6

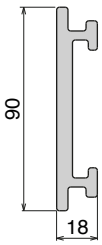

Pag 403

1077 Label saver
Fit on mm
60 x 6

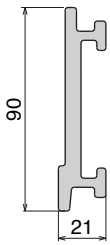

Pag 403

1077 RS
Fit on mm
60 x 6

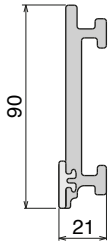

Pag 404

1078 RS
Fit on mm
60 x 6

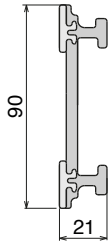

Pag 404

193
Fit on mm
60 x 5

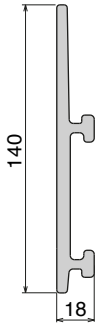

Pag 405

189
Fit on mm
60 x 5

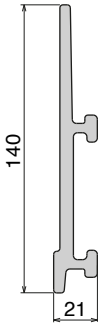

Pag 405/406

193
Fit on mm
60 x 6

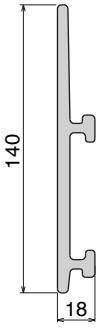

Pag 407

189 Label saver
Fit on mm
60 x 6

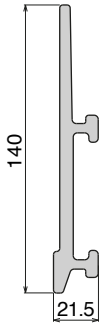

Pag 407/408

1075 RS
Fit on mm
60 x 6

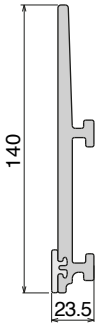

Pag 408

187
Fit on mm
60 x 6

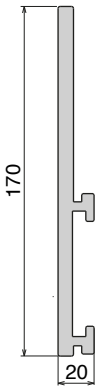

Pag 409

187 Label saver
Fit on mm
60 x 6

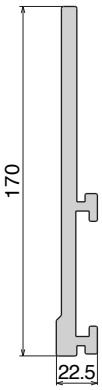

Pag 409

117
Stainless steel
Fit on mm
40 x 6
40 x 8
40 x 10

Pag 410

1055
Stainless steel
Fit on mm
40 x 8
50 x 6

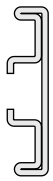

Pag 410

159 - 1088 - 1089
Stainless steel
Fit on mm
50 x 6
60 x 5
60 x 6

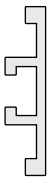

Pag 410

Guide rail

See product page for specific details and materials available. | Assembled with stainless steel profile AISI 304.

119

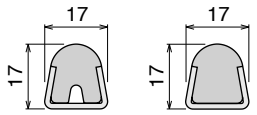

Pag 411

121

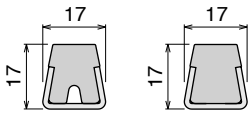

Pag 412

120

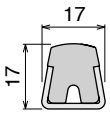

Pag 413

152

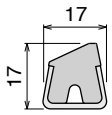

Pag 413

1067

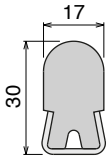

Pag 414

143

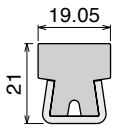

Pag 414

122

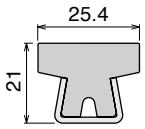

Pag 415

123

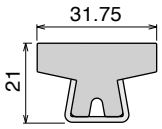

Pag 415

140

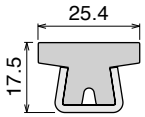

Pag 416

146

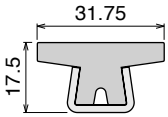

Pag 416

124

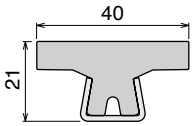

Pag 417

141

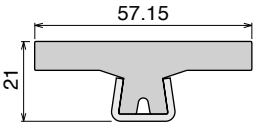

Pag 417

142

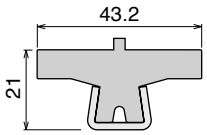

Pag 418

125

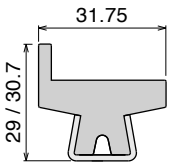

Pag 418

144

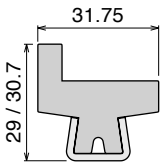

Pag 419

184

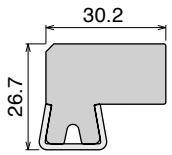

Pag 419

145

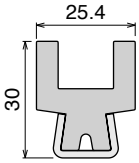

Pag 420

1087

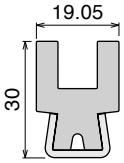

Pag 420

191

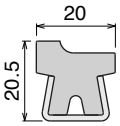

Pag 421

126

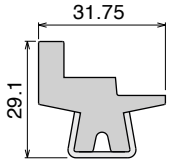

Pag 421

127

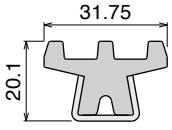

Pag 421

128

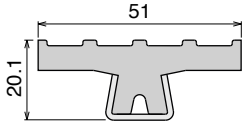

Pag 422

129

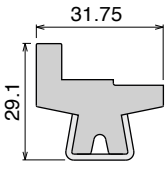

Pag 422

Bending machines and rollers

See product page for specific details.

198

Pag 423

199

Pag 423

151

Pag 424/425

Movex

Neck guide

See product page for specific details and materials available.

170 Fit on 2,5 mm

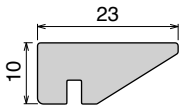

Pag 426

168 Fit on 2,5 mm

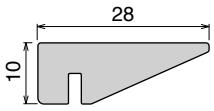

Pag 426

169 Fit on 2,5 mm

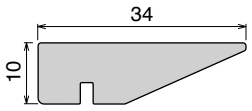

Pag 426

167 Fit on 1,8/2 mm

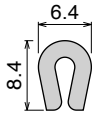

Pag 427

192 Fit on 1,8/2 mm

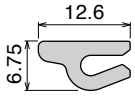

Pag 427

1062 Fit on 1,8/2 mm

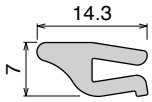

Pag 427

1072 Fit on 1,8/2 mm

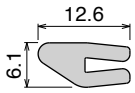

Pag 427

1073 Fit on 1,8/2 mm

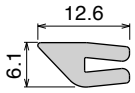

Pag 428

1076 Fit on 1,8/2 mm

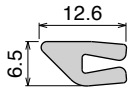

Pag 428

1037 Fit on 3 mm

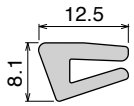

Pag 428

171 Fit on 3 mm

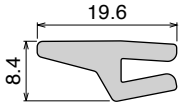

Pag 428

172 Fit on 3 mm

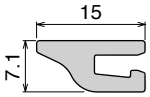

Pag 428

131
TYPE A
TYPE B

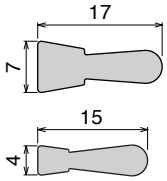

Pag 429

130 Aluminum
TYPE A

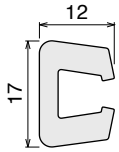

Pag 429

130 Aluminum
TYPE B

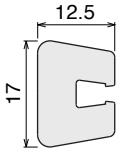

Pag 429

188 Aluminum

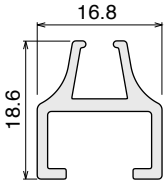

Pag 429

Shoes and connecting elements

See product page for specific details and materials available.

113

Pag 430

113

Pag 431

114

Pag 431

116

Pag 432

116

Pag 433

115

Pag 433

NEW 1094

Profilo "L" / *L-Profile / L-Profil*

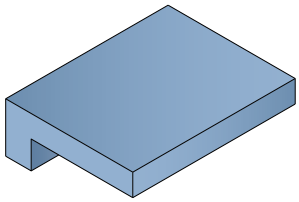

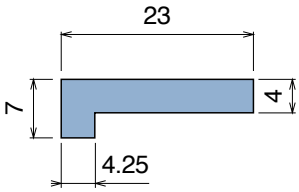

Article-Nr.	Material	Availability	Supply
109404	BluLub	On request	60 m coils
109403	Ti-White	On request	60 m coils
109401	Black	On request	60 m coils
109405	Blue	On request	60 m coils
109402	Green	On request	60 m coils

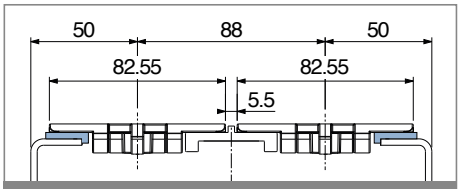

Example of application

175

Profilo "L" / *L-Profile / L-Profil*

Delivery: Easy Standard

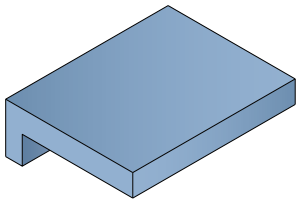

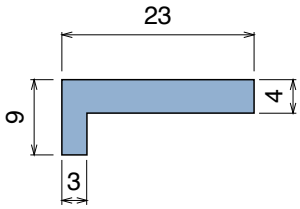

Article-Nr.	Material	Availability	Supply
17504	BluLub	On request	60 m coils
17503	Ti-White	On request	60 m coils
17501	Black	Stock item	60 m coils
17505	Blue	On request	60 m coils
17502	Green	Stock item	60 m coils

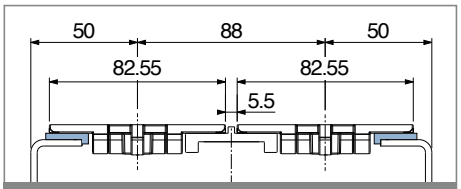

Example of application

1038

Profilo "L" / *L-Profile / L-Profil*

North America STANDARD

Delivery: Easy Standard

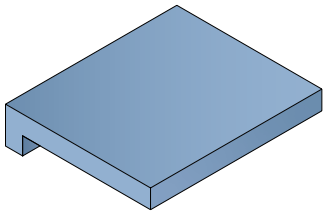

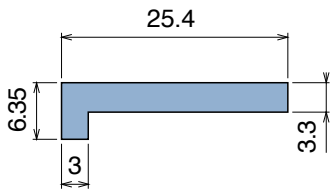

Article-Nr.	Material	Availability	Supply
103804	BluLub	On request	60 m coils
103803	Ti-White	On request	60 m coils
103805	Blue	On request	60 m coils

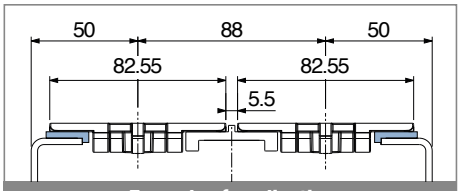

Example of application

150

Profilo "L" / *L-Profile / L-Profil*

Delivery: Easy Standard

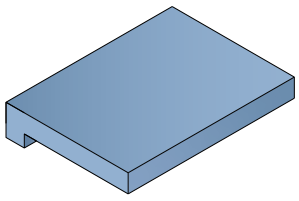

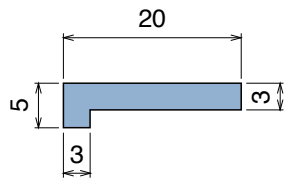

Article-Nr.	Material	Availability	Supply
15004	BluLub	On request	60 m coils
15003	Ti-White	On request	60 m coils
15001	Black	Stock item	60 m coils
15005	Blue	On request	60 m coils
15002	Green	Stock item	60 m coils

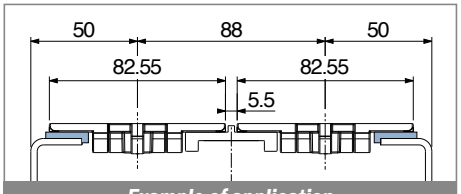

Example of application

Oadby Core product range

Oadby Available from stock in Leicester | Easy Available from stock in Italy | Standard Produced to order in Italy

1058

Profilo "L" / *L-Profile / L-Profil*

Delivery: Easy Standard

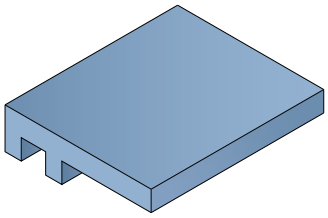

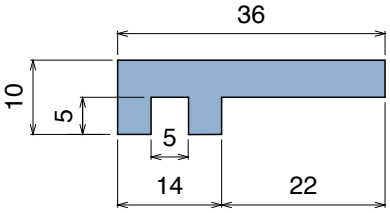

Article-Nr.	Material	Availability	Supply
105800BC	BluLub	On request	3 m bars
105800B	BluLub	On request	6 m bars
105803C	Ti-White	On request	3 m bars
105803	Ti-White	On request	6 m bars
105801C	Black	Stock item	3 m bars
105801	Black	On request	6 m bars
105805C	Blue	On request	3 m bars
105805	Blue	On request	6 m bars
105802C	Green	Stock item	3 m bars
105802	Green	On request	6 m bars

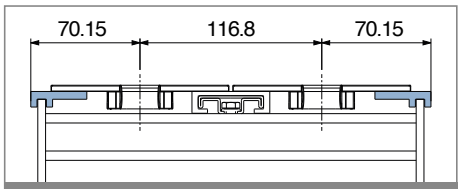

Example of application

174

Profilo "L" / *L-Profile / L-Profil*

Delivery: Easy Standard

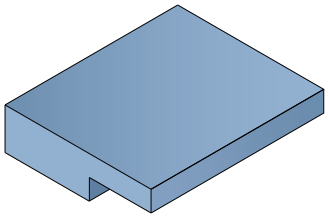

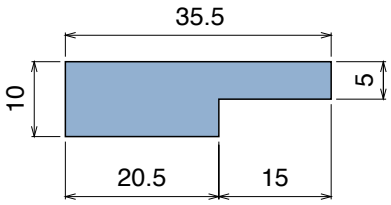

Article-Nr.	Material	Availability	Supply
17404C	BluLub	On request	3 m bars
17404	BluLub	On request	6 m bars
17403C	Ti-White	On request	3 m bars
17403	Ti-White	On request	6 m bars
17401C	Black	Stock item	3 m bars
17401	Black	On request	6 m bars
17405C	Blue	On request	3 m bars
17405	Blue	On request	6 m bars
17402C	Green	Stock item	3 m bars
17402	Green	On request	6 m bars

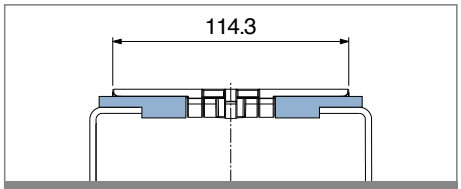

Example of application

101

Profilo "Z" / *Z-Profile / Z-Profil*

Delivery: Easy Standard

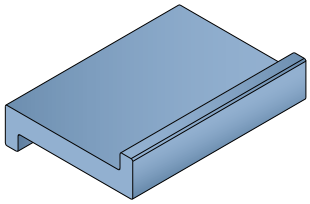

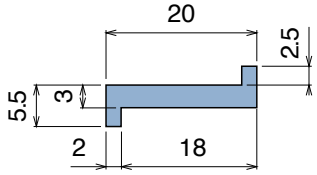

Article-Nr.	Material	Availability	Supply
10104	BluLub	On request	60 m coils
10103	Ti-White	On request	60 m coils
10101	Black	Stock item	60 m coils
10105	Blue	On request	60 m coils
10102	Green	Stock item	60 m coils

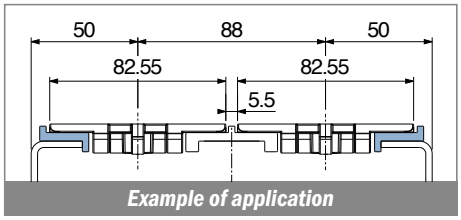

Example of application

102 Profilo "Z" / *Z-Profile / Z-Profil*

Delivery: Easy Standard

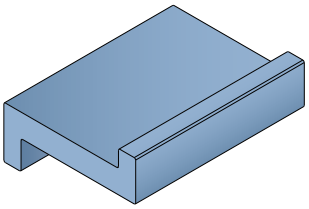

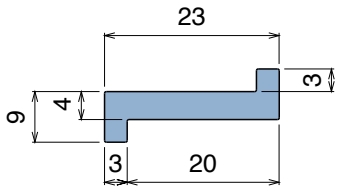

Article-Nr.	Material	Availability	Supply
10202B	BluLub	Stock item	60 m coils
10203	Ti-White	On request	60 m coils
10201	Black	Stock item	60 m coils
10205	Blue	On request	60 m coils
10202	Green	Stock item	60 m coils

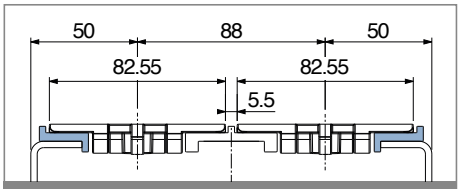

Example of application

102 Profilo "Z" / *Z-Profile / Z-Profil*

Delivery: Easy Standard

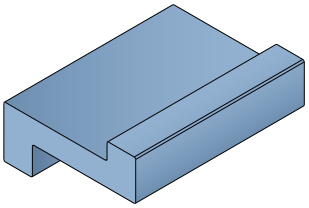

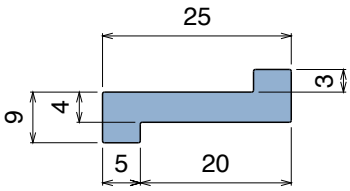

Article-Nr.	Material	Availability	Supply
10299B	BluLub	Stock item	60 m coils
10293	Ti-White	On request	60 m coils
10297	Black	On request	60 m coils
10295	Blue	On request	60 m coils
10298	Green	Stock item	60 m coils

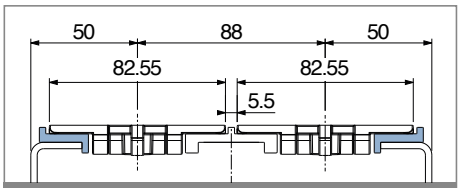

Example of application

176 Profilo "Z" / *Z-Profile / Z-Profil*

Delivery: Easy Standard

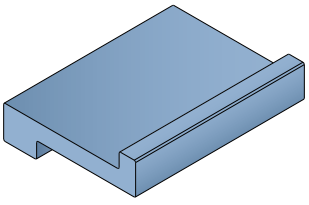

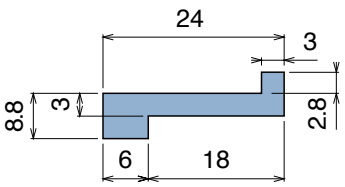

Article-Nr.	Material	Availability	Supply
17604	BluLub	On request	60 m coils
17603	Ti-White	On request	60 m coils
17601	Black	On request	60 m coils
17605	Blue	On request	60 m coils
17602	Green	Stock item	60 m coils

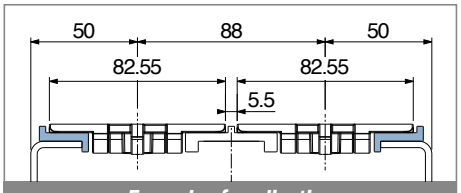

Example of application

Oadby Core product range
Oadby Available from stock in Leicester
Easy Available from stock in Italy
Standard Produced to order in Italy

Movex®

1074

Profilo "Z" / *Z-Profile* / *Z-Profil*

Delivery: Easy Standard

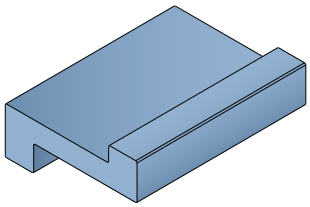

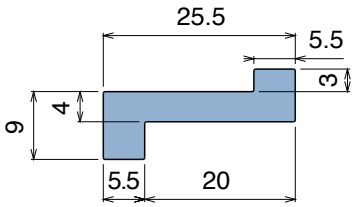

Article-Nr.	Material	Availability	Supply
107404	BluLub	On request	60 m coils
107403	Ti-White	On request	60 m coils
107401	Black	Stock item	60 m coils
107405	Blue	On request	60 m coils

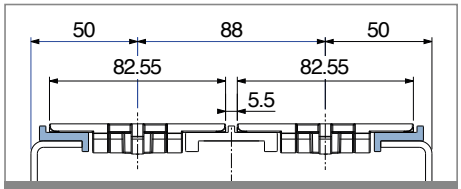

Example of application

107

Profilo guida catena / *Wear strip* / *Rückführleiste*

Delivery: Easy Standard

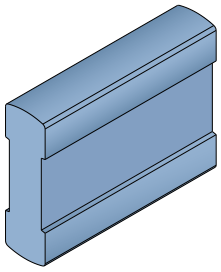

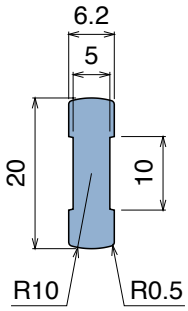

Supports available
Part 230/231
Pag 446

Article-Nr.	Material	Availability	Supply
10704	BluLub	On request	60 m coils
10703	Ti-White	Stock item	60 m coils
10701	Black	On request	60 m coils
10705	Blue	On request	60 m coils
10702	Green	Stock item	60 m coils

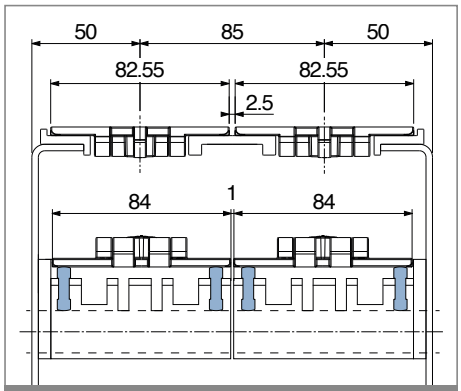

Example of application

108

Profilo T / *T-profile* / *T-Profil*

Delivery: Easy Standard

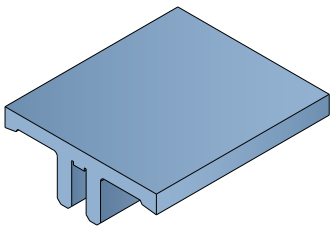

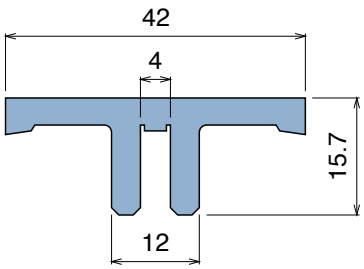

Article-Nr.	Material	Availability	Supply
10800BC	BluLub	On request	3 m bars
10800B	BluLub	Stock item	6 m bars
10803C	Ti-White	On request	3 m bars
10803	Ti-White	On request	6 m bars
10801C	Black	Stock item	3 m bars
10801	Black	On request	6 m bars
10805C	Blue	On request	3 m bars
10805	Blue	On request	6 m bars
10802C	Green	Stock item	3 m bars
10802	Green	Stock item	6 m bars

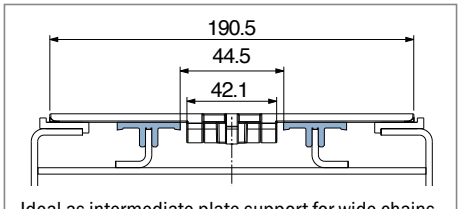

Ideal as intermediate plate support for wide chains.

Example of application

105

Profilo piatto / *Flat profile / Flachprofil*

Delivery: Easy Standard

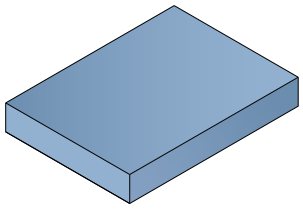

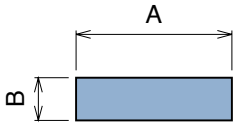

Article-Nr.	Material	A	B	Availability	Supply
10502BL	BluLub	20	3	On request	60 m coils
10504BL	BluLub	20	5	On request	60 m coils
10595BL	BluLub	25	3	On request	60 m coils
10592BL	BluLub	30	3	On request	60 m coils
10594BL	BluLub	30	5	On request	60 m coils
10596BL	BluLub	40	3	On request	60 m coils
10597BL	BluLub	50	3	On request	60 m coils
10506BL	BluLub	60	3	On request	60 m coils
10508BL	BluLub	70	3	On request	60 m coils
10510BL	BluLub	100	3	On request	60 m coils
10502W	Ti-White	20	3	On request	60 m coils
10504W	Ti-White	20	5	On request	60 m coils
10595W	Ti-White	25	3	On request	60 m coils
10592W	Ti-White	30	3	On request	60 m coils
10594W	Ti-White	30	5	On request	60 m coils
10596W	Ti-White	40	3	On request	60 m coils
10597W	Ti-White	50	3	On request	60 m coils
10506W	Ti-White	60	3	On request	60 m coils
10508W	Ti-White	70	3	On request	60 m coils
10510W	Ti-White	100	3	On request	60 m coils
10501	Black	20	3	Stock item	60 m coils
10503	Black	20	5	Stock item	60 m coils
10505	Black	60	3	Stock item	60 m coils
10507	Black	70	3	Stock item	60 m coils
10509	Black	100	3	On request	60 m coils
10501B	Blue	20	3	On request	60 m coils
10503B	Blue	20	5	On request	60 m coils
10505B	Blue	60	3	On request	60 m coils
10507B	Blue	70	3	On request	60 m coils
10509B	Blue	100	3	On request	60 m coils
10502	Green	20	3	Stock item	60 m coils
10504	Green	20	5	Stock item	60 m coils
10595	Green	25	3	Stock item	60 m coils
10592	Green	30	3	On request	60 m coils
10594	Green	30	5	Stock item	60 m coils
10596	Green	40	3	Stock item	60 m coils
10597	Green	50	3	On request	60 m coils
10506	Green	60	3	Stock item	60 m coils
10508	Green	70	3	Stock item	60 m coils
10510	Green	100	3	Stock item	60 m coils

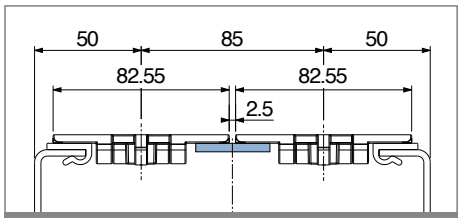

Example of application

106

Profilo guida catena / *Flat profile with nose / Flachprofil mit Nase*

Delivery: Easy Standard

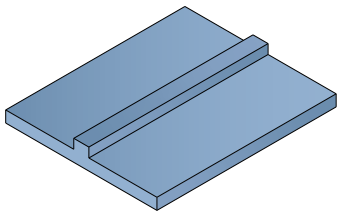

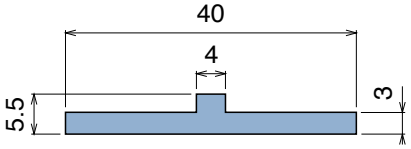

Article-Nr.	Material	Availability	Supply
10604	BluLub	On request	60 m coils
10601	Ti-White	Stock item	60 m coils
10605	Blue	On request	60 m coils
10602	Green	Stock item	60 m coils

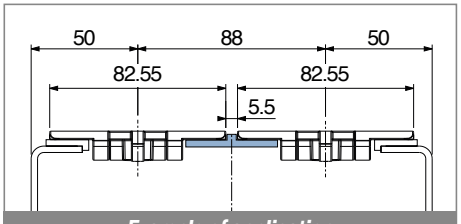

Example of application

Oadby Core product range
Oadby Available from stock in Leicester
Easy Available from stock in Italy
Standard Produced to order in Italy

Movex

103

Profilo "J" / *J-Profile / J-Profil*

Delivery: Easy | Standard — Fit on 2,5 to 3,5 mm

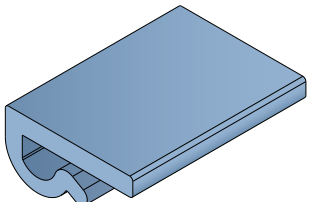

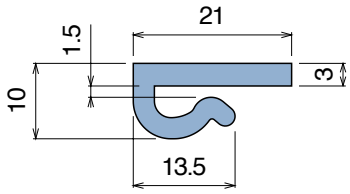

Article-Nr.	Material	Availability	Supply
10300B-30	BluLub	Stock item	30 m coils
10303	Ti-White	Stock item	60 m coils
10301	Black	Stock item	60 m coils
10305	Blue	On request	60 m coils
10302	Green	Stock item	60 m coils

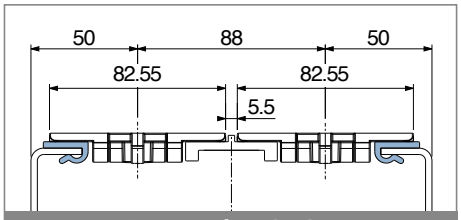

Example of application

104

Profilo "J" / *J-Profile / J-Profil*

Delivery: Easy | Standard — Fit on 2,5 to 3,5 mm

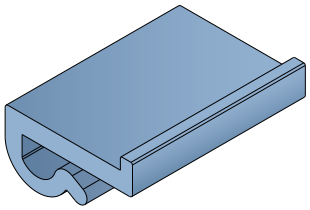

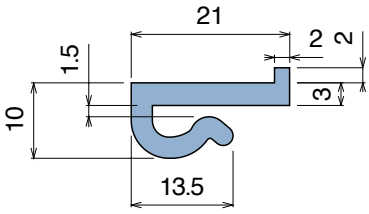

Article-Nr.	Material	Availability	Supply
10400B	BluLub	Stock item	60 m coils
10403	Ti-White	On request	60 m coils
10401	Black	Stock item	60 m coils
10405	Blue	On request	60 m coils
10402	Green	Stock item	60 m coils

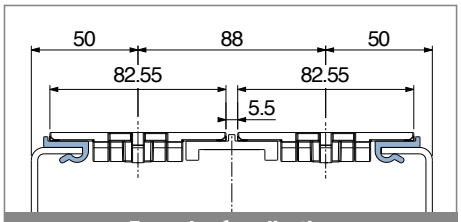

Example of application

179

Profilo "J" / *J-Profile / J-Profil*

Delivery: Easy | Standard — Fit on 2,5 to 3,5 mm

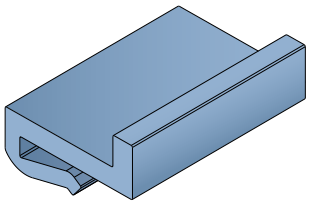

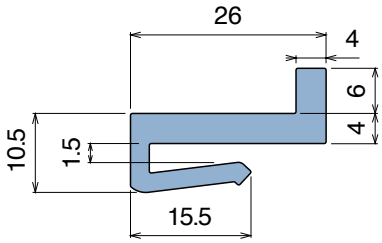

Article-Nr.	Material	Availability	Supply
17902BC	BluLub	On request	3 m bars
17902B	BluLub	On request	6 m bars
17902B-60	BluLub	Stock item	60 m coils
17902WC	Ti-White	On request	3 m bars
17902W	Ti-White	On request	6 m bars
17902W-60	Ti-White	On request	60 m coils
17901C	Black	Stock item	3 m bars
17901	Black	On request	6 m bars
17901BC	Blue	On request	3 m bars
17901B	Blue	On request	6 m bars
17901B-60	Blue	On request	60 m coils
17902C	Green	Stock item	3 m bars
17902	Green	On request	6 m bars
17902-60	Green	Stock item	60 m coils

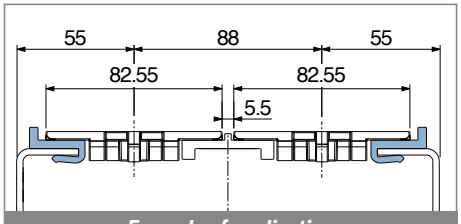

Example of application

1014

Profilo "J" / *J-Profile / J-Profil*

Delivery: Easy | Standard — Fit on 3 mm (1/8")

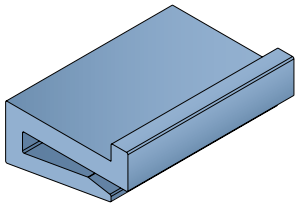

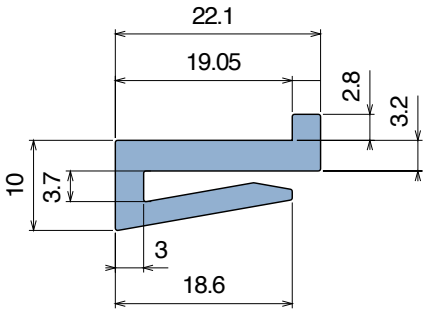

North America STANDARD

Article-Nr.	Material	Availability	Supply
101400BC	BluLub	On request	3 m bars
101400B	BluLub	On request	6 m bars
101400B-30	BluLub	On request	30 m coils
101403C	Ti-White	Stock item	3 m bars
101403	Ti-White	On request	6 m bars
101403-30	Ti-White	Stock item	30 m coils
101405C	Blue	On request	3 m bars
101405	Blue	On request	6 m bars
101405-30	Blue	On request	30 m coils

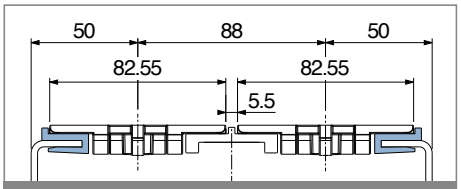

Example of application

1015

Profilo "J" / *J-Profile / J-Profil*

Delivery: Easy | Standard — Fit on 2,5 to 3,5 mm (1/8")

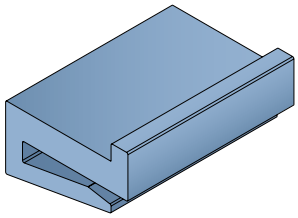

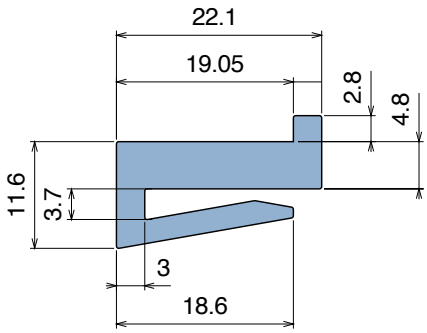

North America STANDARD

Article-Nr.	Material	Availability	Supply
101500BC	BluLub	On request	3 m bars
101500B	BluLub	On request	6 m bars
101500B-30	BluLub	On request	30 m coils
101503C	Ti-White	On request	3 m bars
101503	Ti-White	On request	6 m bars
101503-30	Ti-White	On request	30 m coils
101505C	Blue	On request	3 m bars
101505	Blue	On request	6 m bars
101505-30	Blue	On request	30 m coils

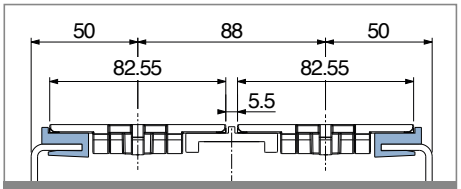

Example of application

1016

Profilo "J" / *J-Profile / J-Profil*

Delivery: Easy | Standard — Fit on 3 mm (1/8")

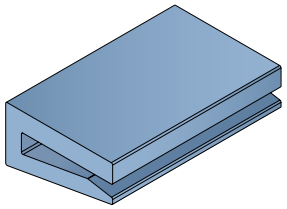

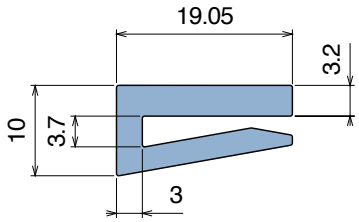

North America STANDARD

Article-Nr.	Material	Availability	Supply
101600BC	BluLub	On request	3 m bars
101600B	BluLub	On request	6 m bars
101600B-30	BluLub	On request	30 m coils
101603C	Ti-White	Stock item	3 m bars
101603	Ti-White	On request	6 m bars
101603-30	Ti-White	Stock item	30 m coils
101601C	Black	On request	3 m bars
101601	Black	On request	6 m bars
101601-30	Black	On request	30 m coils
101605C	Blue	On request	3 m bars
101605	Blue	On request	6 m bars
101605-30	Blue	On request	30 m coils
101602C	Green	On request	3 m bars
101602	Green	On request	6 m bars
101602-30	Green	On request	30 m coils

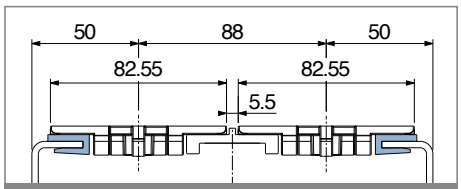

Example of application

Oadby Core product range

Oadby Available from stock in Leicester | Easy Available from stock in Italy | Standard Produced to order in Italy

Movex

1017

Profilo "J" / *J-Profile / J-Profil*

Delivery: Easy | Standard | Fit on 3 mm (1/8")

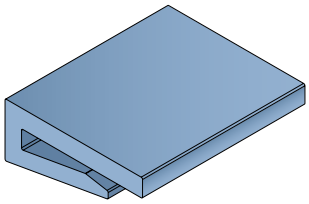

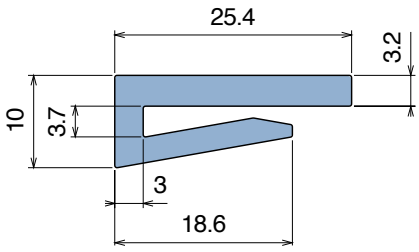

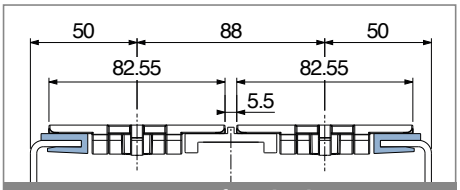

Example of application

North America STANDARD

Article-Nr.	Material	Availability	Supply
101700BC	BluLub	On request	3 m bars
101700B	BluLub	On request	6 m bars
101700B-30	BluLub	On request	30 m coils
101703C	Ti-White	Stock item	3 m bars
101703	Ti-White	On request	6 m bars
101703-30	Ti-White	Stock item	30 m coils
101701C	Black	On request	3 m bars
101701	Black	On request	6 m bars
101701-30	Black	On request	30 m coils
101705C	Blue	On request	3 m bars
101705	Blue	On request	6 m bars
101705-30	Blue	On request	30 m coils
101702C	Green	On request	3 m bars
101702	Green	On request	6 m bars
101702-30	Green	On request	30 m coils

1018

Profilo "J" / *J-Profile / J-Profil*

Delivery: Easy | Standard | Fit on 3 mm (1/8")

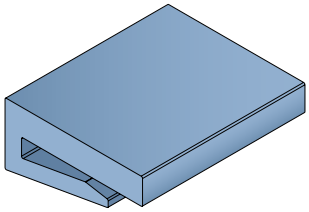

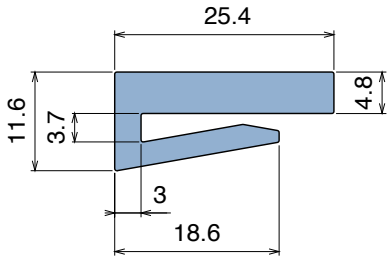

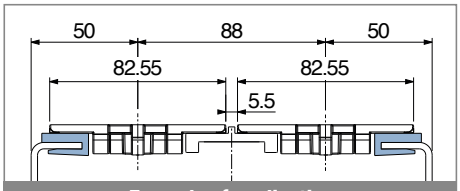

Example of application

North America STANDARD

Article-Nr.	Material	Availability	Supply
101800BC	BluLub	On request	3 m bars
101800B	BluLub	On request	6 m bars
101800B-30	BluLub	On request	30 m coils
101803C	Ti-White	Stock item	3 m bars
101803	Ti-White	On request	6 m bars
101803-30	Ti-White	On request	30 m coils
101805C	Blue	On request	3 m bars
101805	Blue	On request	6 m bars
101805-30	Blue	On request	30 m coils

1019

Profilo "J" / *J-Profile / J-Profil*

Delivery: Easy | Standard | Fit on 3 mm (1/8")

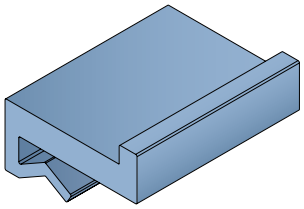

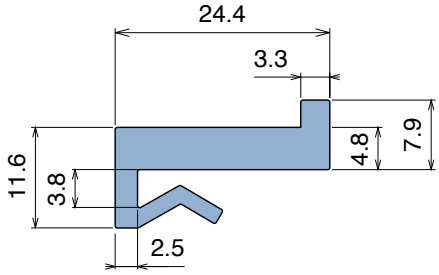

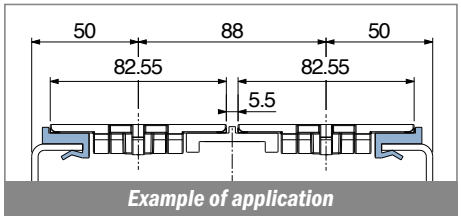

Example of application

North America STANDARD

Article-Nr.	Material	Availability	Supply
101900BC	BluLub	On request	3 m bars
101900B	BluLub	On request	6 m bars
101900B-30	BluLub	On request	30 m coils
101903C	Ti-White	Stock item	3 m bars
101903	Ti-White	On request	6 m bars
101903-30	Ti-White	On request	30 m coils
101905C	Blue	On request	3 m bars
101905	Blue	On request	6 m bars
101905-30	Blue	On request	30 m coils

1020

Profilo "J" / *J-Profile / J-Profil*

Delivery: Easy | Standard — Fit on 3 mm (1/8")

North America STANDARD

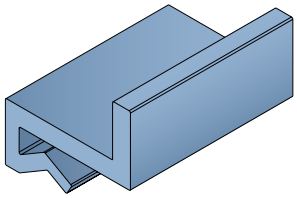

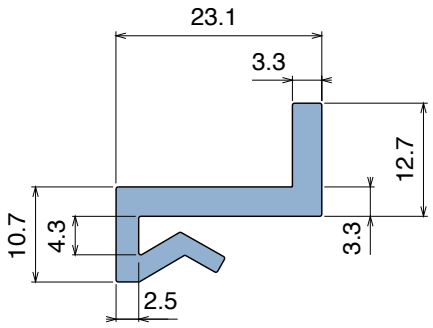

Article-Nr.	Material	Availability	Supply
102000BC	BluLub	On request	3 m bars
102000B	BluLub	On request	6 m bars
102003C	Ti-White	Stock item	3 m bars
102003	Ti-White	Stock item	6 m bars
102001C	Black	On request	3 m bars
102001	Black	On request	6 m bars
102005C	Blue	On request	3 m bars
102005	Blue	On request	6 m bars
102002C	Green	On request	3 m bars
102002	Green	On request	6 m bars

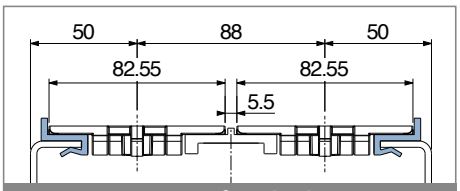

Example of application

1068

Profilo "J" / *J-Profile / J-Profil*

Delivery: Easy | Standard — Fit on 1,8 to 2 mm

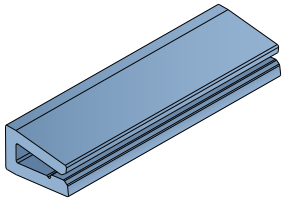

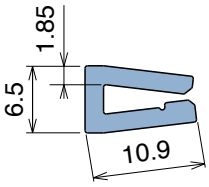

Article-Nr.	Material	Availability	Supply
106800B	BluLub	Stock item	30 m coils
106802	Ti-White	On request	30 m coils
106805	Blue	On request	30 m coils

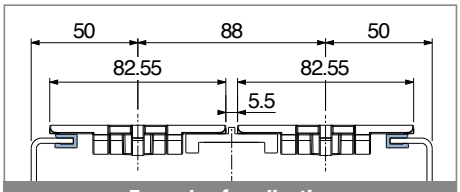

Example of application

NEW

1090

Profilo "J" / *J-Profile / J-Profil*

Delivery: Easy | Standard — Fit on 1,8 to 2 mm

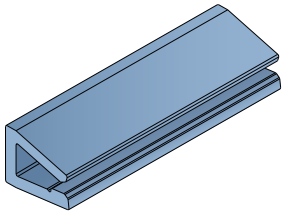

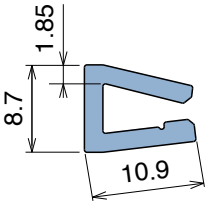

Article-Nr.	Material	Availability	Supply
109000B	BluLub	On request	30 m coils
109002	Ti-White	On request	30 m coils
109005	Blue	On request	30 m coils

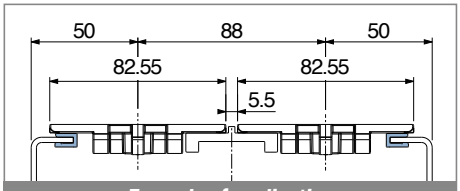

Example of application

Oadby Core product range
Oadby Available from stock in Leicester
Easy Available from stock in Italy
Standard Produced to order in Italy

Movex®

1021

Profilo "J" / *J-Profile / J-Profil*

Delivery: Easy | Standard — Fit on 3 mm (1/8")

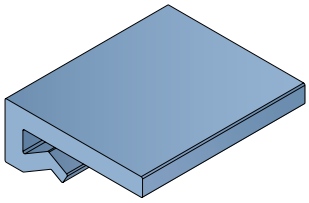

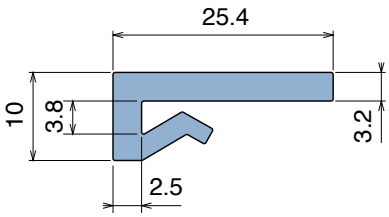

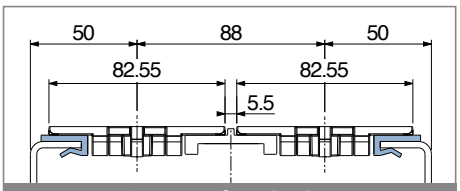

Example of application

North America STANDARD

Article-Nr.	Material	Availability	Supply
102100BC	BluLub	On request	3 m bars
102100B	BluLub	On request	6 m bars
102100B-30	BluLub	On request	30 m coils
102103C	Ti-White	Stock item	3 m bars
102103	Ti-White	On request	6 m bars
102103-30	Ti-White	Stock item	30 m coils
102101C	Black	On request	3 m bars
102101	Black	On request	6 m bars
102101-30	Black	On request	30 m coils
102105C	Blue	On request	3 m bars
102105	Blue	On request	6 m bars
102105-30	Blue	On request	30 m coils
102102C	Green	On request	3 m bars
102102	Green	On request	6 m bars
102102-30	Green	On request	30 m coils

1022

Profilo "J" / *J-Profile / J-Profil*

Delivery: Easy | Standard — Fit on 3 mm (1/8")

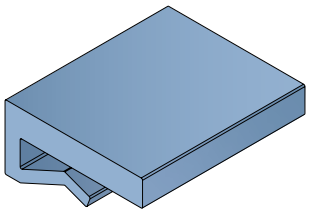

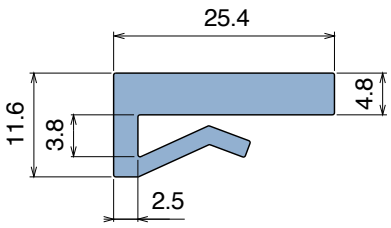

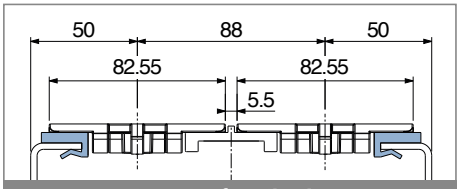

Example of application

Article-Nr.	Material	Availability	Supply
102200BC	BluLub	On request	3 m bars
102200B	BluLub	On request	6 m bars
102200B-30	BluLub	On request	30 m coils
102203C	Ti-White	Stock item	3 m bars
102203	Ti-White	On request	6 m bars
102203-30	Ti-White	On request	30 m coils
102205C	Blue	On request	3 m bars
102205	Blue	On request	6 m bars
102205-30	Blue	On request	30 m coils

1023

Profilo "J" / *J-Profile / J-Profil*

Delivery: Easy | Standard — Fit on 3 mm (1/8")

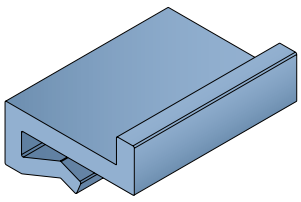

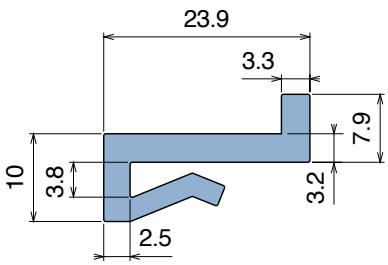

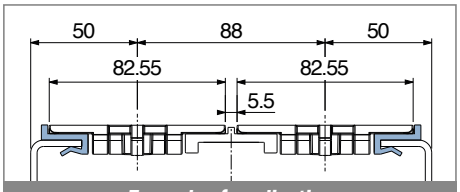

Example of application

North America STANDARD

Article-Nr.	Material	Availability	Supply
102300BC	BluLub	On request	3 m bars
102300B	BluLub	On request	6 m bars
102303C	Ti-White	Stock item	3 m bars
102303	Ti-White	On request	6 m bars
102305C	Blue	On request	3 m bars
102305	Blue	On request	6 m bars

1024

Profilo "J" / *J-Profile / J-Profil*

Delivery: Easy | Standard — Fit on 3 mm (1/8")

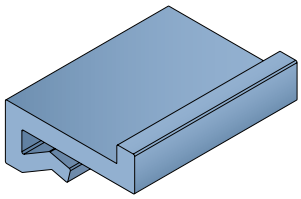

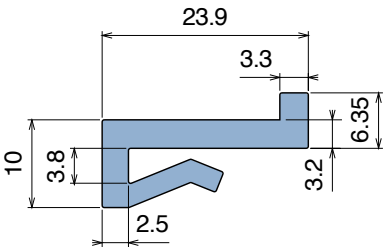

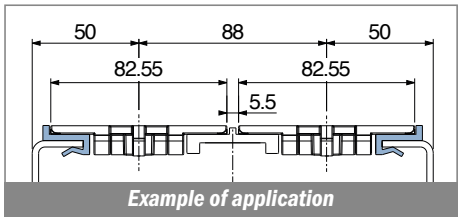

Example of application

North America STANDARD

Article-Nr.	Material	Availability	Supply
102400BC	BluLub	On request	3 m bars
102400B	BluLub	On request	6 m bars
102400B-30	BluLub	On request	30 m coils
102403C	Ti-White	Stock item	3 m bars
102403	Ti-White	On request	6 m bars
102403-30	Ti-White	Stock item	30 m coils
102401C	Black	On request	3 m bars
102401	Black	On request	6 m bars
102401-30	Black	On request	30 m coils
102405C	Blue	On request	3 m bars
102405	Blue	On request	6 m bars
102405-30	Blue	On request	30 m coils
102402C	Green	Stock item	3 m bars
102402	Green	Stock item	6 m bars
102402-30	Green	On request	30 m coils

1025

Profilo "J" / *J-Profile / J-Profil*

Delivery: Easy | Standard — Fit on 3 mm (1/8")

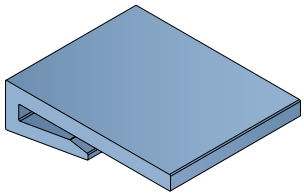

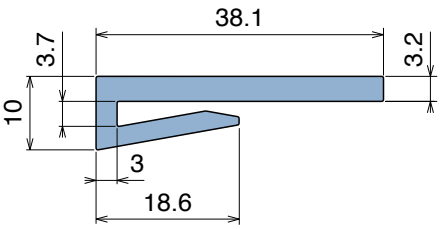

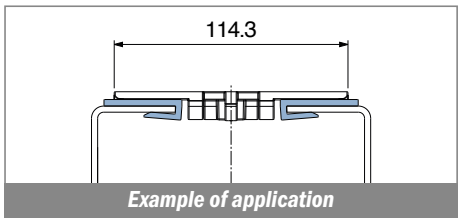

Example of application

North America STANDARD

Article-Nr.	Material	Availability	Supply
102500BC	BluLub	On request	3 m bars
102500B	BluLub	On request	6 m bars
102500B-30	BluLub	On request	30 m coils
102503C	Ti-White	Stock item	3 m bars
102503	Ti-White	On request	6 m bars
102503-30	Ti-White	Stock item	30 m coils
102501C	Black	On request	3 m bars
102501	Black	On request	6 m bars
102501-30	Black	On request	30 m coils
102505C	Blue	On request	3 m bars
102505	Blue	On request	6 m bars
102505-30	Blue	On request	30 m coils
102502C	Green	On request	3 m bars
102502	Green	On request	6 m bars
102502-30	Green	On request	30 m coils

1026

Profilo "J" / *J-Profile / J-Profil*

Delivery: Easy | Standard — Fit on 3 mm (1/8")

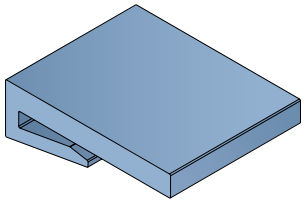

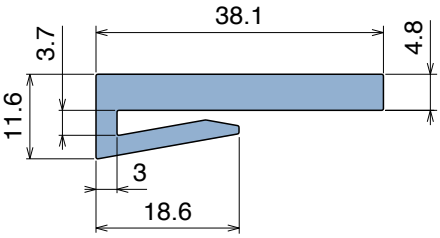

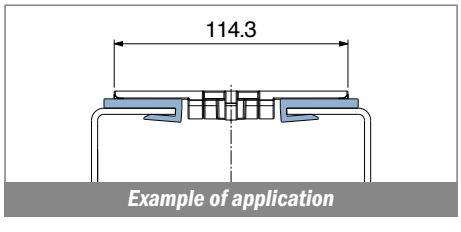

Example of application

North America STANDARD

Article-Nr.	Material	Availability	Supply
102600BC	BluLub	On request	3 m bars
102600B	BluLub	On request	6 m bars
102600B-30	BluLub	On request	30 m coils
102603C	Ti-White	Stock item	3 m bars
102603	Ti-White	On request	6 m bars
102603-30	Ti-White	On request	30 m coils
102605C	Blue	On request	3 m bars
102605	Blue	On request	6 m bars
102605-30	Blue	On request	30 m coils

Oadby Core product range

Oadby Available from stock in Leicester | Easy Available from stock in Italy | Standard Produced to order in Italy

Movex

1027

Profilo "J" / *J-Profile / J-Profil*

Delivery: Easy | Standard | Fit on 3 mm (1/8")

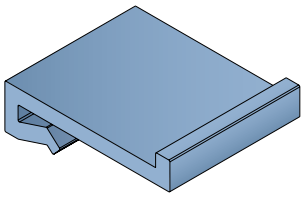

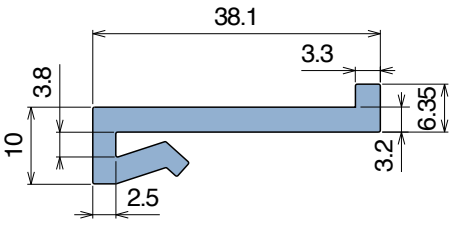

North America STANDARD

Article-Nr.	Material	Availability	Supply
102700BC	BluLub	On request	3 m bars
102700B	BluLub	On request	6 m bars
102700B-30	BluLub	On request	30 m coils
102703C	Ti-White	Stock item	3 m bars
102703	Ti-White	On request	6 m bars
102703-30	Ti-White	On request	30 m coils
102705C	Blue	On request	3 m bars
102705	Blue	On request	6 m bars
102705-30	Blue	On request	30 m coils

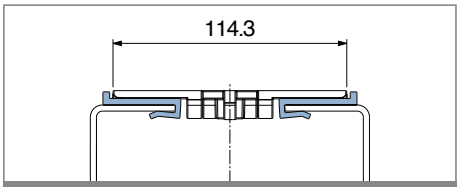

Example of application

1028

Profilo "J" / *J-Profile / J-Profil*

Delivery: Easy | Standard | Fit on 3 mm (1/8")

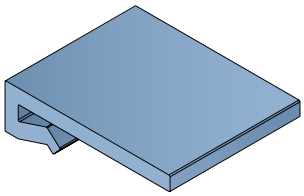

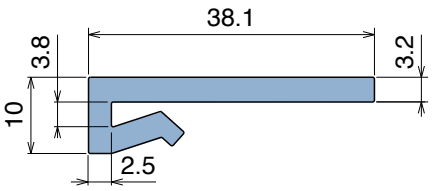

North America STANDARD

Article-Nr.	Material	Availability	Supply
102800BC	BluLub	On request	3 m bars
102800B	BluLub	On request	6 m bars
102800B-30	BluLub	On request	30 m coils
102803C	Ti-White	Stock item	3 m bars
102803	Ti-White	On request	6 m bars
102803-30	Ti-White	Stock item	30 m coils
102805C	Blue	On request	3 m bars
102805	Blue	On request	6 m bars
102805-30	Blue	On request	30 m coils

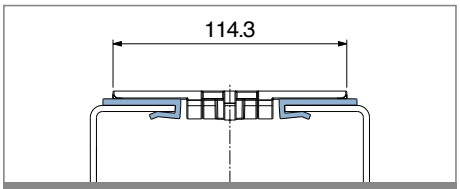

Example of application

1046

Profilo "J" / *J-Profile / J-Profil*

Delivery: Easy | Standard | Fit on 3 mm (1/8")

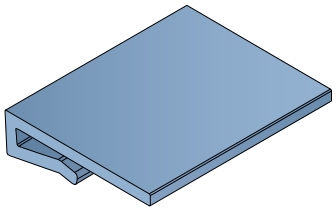

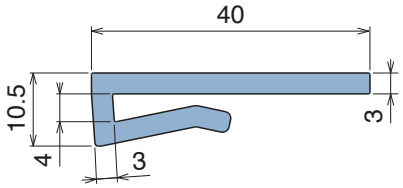

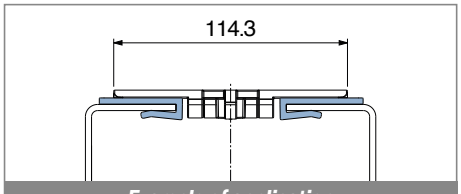

Example of application

North America STANDARD

Article-Nr.	Material	Availability	Supply
104600BC	BluLub	On request	3 m bars
104600B	BluLub	On request	6 m bars
104600B-30	BluLub	Stock item	30 m coils
104603C	Ti-White	Stock item	3 m bars
104603	Ti-White	On request	6 m bars
104603-30	Ti-White	Stock item	30 m coils
104601C	Black	On request	3 m bars
104601	Black	On request	6 m bars
104601-30	Black	On request	30 m coils
104605C	Blue	On request	3 m bars
104605	Blue	On request	6 m bars
104605-30	Blue	On request	30 m coils
104602C	Green	Stock item	3 m bars
104602	Green	On request	6 m bars
104602-30	Green	Stock item	30 m coils

1029

Profilo "J" / *J-Profile / J-Profil*

Delivery: Easy Standard | Fit on 3 mm (1/8")

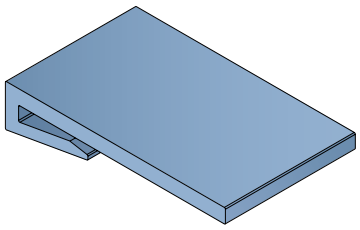

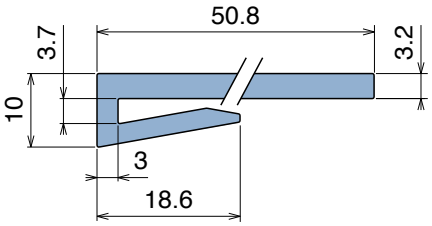

North America STANDARD

Article-Nr.	Material	Availability	Supply
102900BC	BluLub	On request	3 m bars
102900B	BluLub	On request	6 m bars
102900B-30	BluLub	On request	30 m coils
102903C	Ti-White	Stock item	3 m bars
102903	Ti-White	On request	6 m bars
102903-30	Ti-White	On request	30 m coils
102905C	Blue	On request	3 m bars
102905	Blue	On request	6 m bars
102905-30	Blue	On request	30 m coils

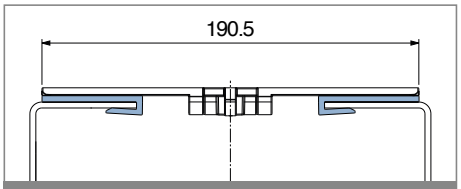

Example of application

1030

Profilo "J" / *J-Profile / J-Profil*

Delivery: Easy Standard | Fit on 3 mm (1/8")

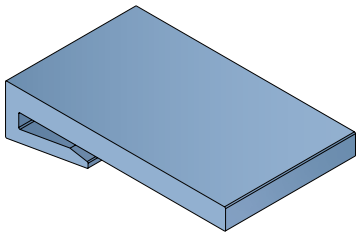

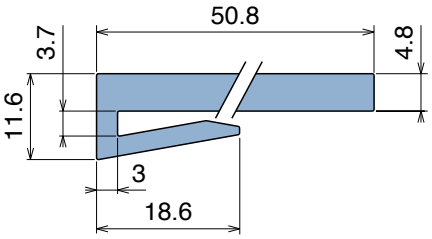

North America STANDARD

Article-Nr.	Material	Availability	Supply
103000BC	BluLub	On request	3 m bars
103000B	BluLub	On request	6 m bars
103003C	Ti-White	Stock item	3 m bars
103003	Ti-White	On request	6 m bars
103005C	Blue	On request	3 m bars
103005	Blue	On request	6 m bars

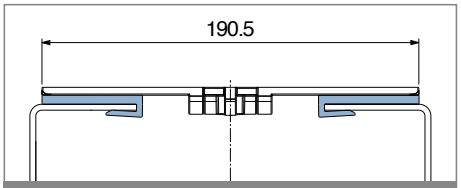

Example of application

1031

Profilo "J" / *J-Profile / J-Profil*

Delivery: Easy Standard | Fit on 3 mm (1/8")

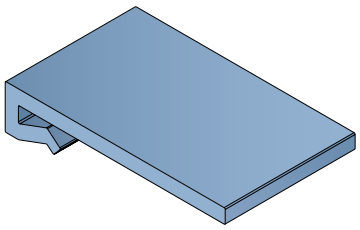

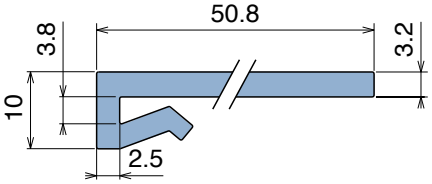

North America STANDARD

Article-Nr.	Material	Availability	Supply
103100BC	BluLub	Stock item	3 m bars
103100B	BluLub	On request	6 m bars
103103C	Ti-White	Stock item	3 m bars
103103	Ti-White	Stock item	6 m bars
103105C	Blue	On request	3 m bars
103105	Blue	On request	6 m bars

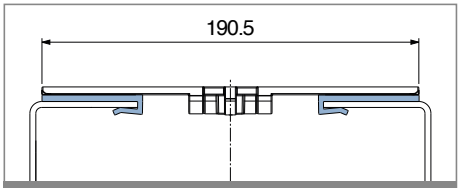

Example of application

Oadby Core product range
Oadby Available from stock in Leicester
Easy Available from stock in Italy
Standard Produced to order in Italy

Movex®

1032

Profilo "J" / *J-Profile / J-Profil*

Delivery: Easy Standard Fit on 3 mm (1/8")

North America STANDARD

Article-Nr.	Material	Availability	Supply
103200BC	BluLub	On request	3 m bars
103200B	BluLub	On request	6 m bars
103203C	Ti-White	Stock item	3 m bars
103203	Ti-White	On request	6 m bars
103205C	Blue	On request	3 m bars
103205	Blue	On request	6 m bars

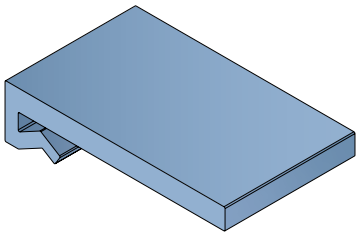

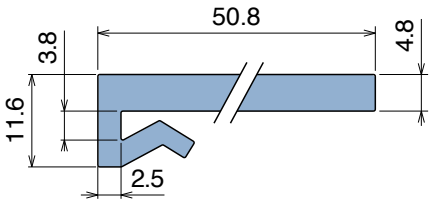

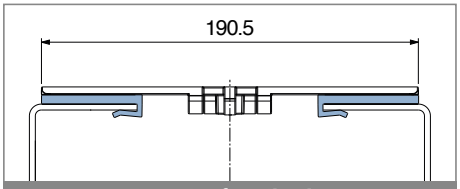

Example of application

1035

Profilo "J" / *J-Profile / J-Profil*

Delivery: Easy Standard Fit on 3 mm (1/8")

North America STANDARD

Article-Nr.	Material	Availability	Supply
103500BC	BluLub	On request	3 m bars
103500B	BluLub	On request	6 m bars
103503C	Ti-White	Stock item	3 m bars
103503	Ti-White	On request	6 m bars
103505C	Blue	On request	3 m bars
103505	Blue	On request	6 m bars

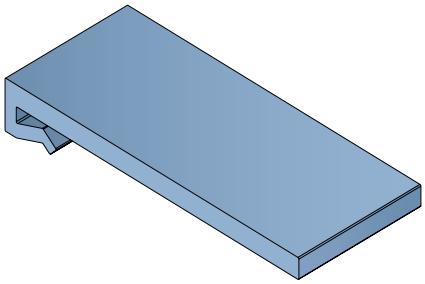

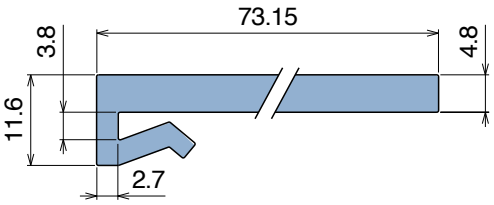

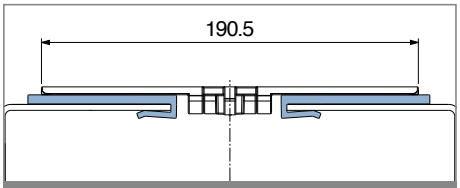

Example of application

1033

Profilo "J" / *J-Profile / J-Profil*

Delivery: Easy Standard Fit on 3 mm (1/8")

North America STANDARD

Article-Nr.	Material	Availability	Supply
103300BC	BluLub	Stock item	3 m bars
103300B	BluLub	On request	6 m bars
103303C	Ti-White	Stock item	3 m bars
103303	Ti-White	On request	6 m bars
103305C	Blue	On request	3 m bars
103305	Blue	On request	6 m bars

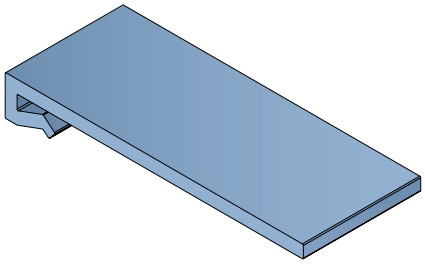

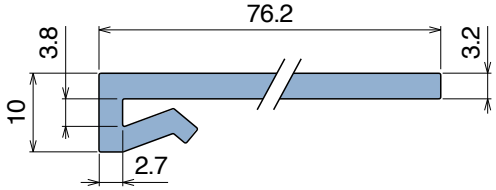

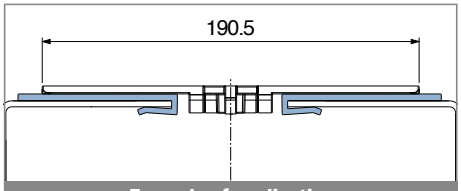

Example of application

1034

Profilo "J" / *J-Profile / J-Profil*

Delivery: Easy | Standard | Fit on 3 mm (1/8")

North America STANDARD

Article-Nr.	Material	Availability	Supply
103400BC	BluLub	On request	3 m bars
103400B	BluLub	On request	6 m bars
103403C	Ti-White	Stock item	3 m bars
103403	Ti-White	On request	6 m bars
103405C	Blue	On request	3 m bars
103405	Blue	On request	6 m bars

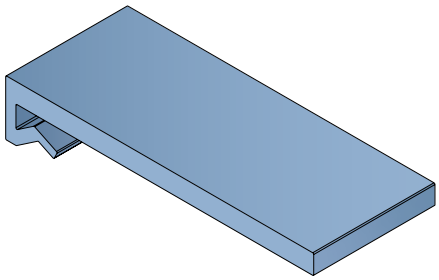

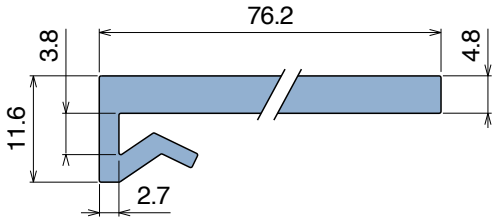

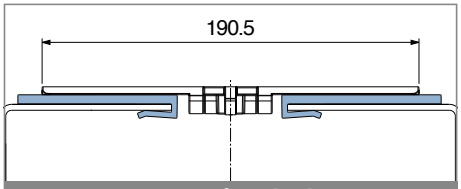

Example of application

109

Profilo "U" / *U-Profile / U-Profil*

Delivery: Easy | Standard

Article-Nr.	Material	Availability	Supply
10901BC	BluLub	Stock item	3 m bars
10901B	BluLub	On request	6 m bars
10901B-30	BluLub	On request	30 m coils
10903C	Ti-White	Stock item	3 m bars
10903	Ti-White	Stock item	6 m bars
10903-30	Ti-White	On request	30 m coils
10901C	Black	Stock item	3 m bars
10901	Black	Stock item	6 m bars
10901-30	Black	Stock item	30 m coils
10905C	Blue	On request	3 m bars
10905	Blue	On request	6 m bars
10905-30	Blue	On request	30 m coils
10902C	Green	Stock item	3 m bars
10902	Green	Stock item	6 m bars
10902-30	Green	On request	30 m coils

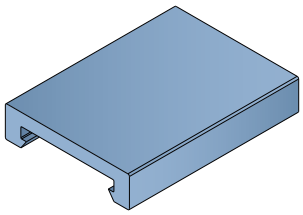

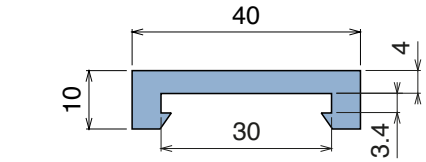

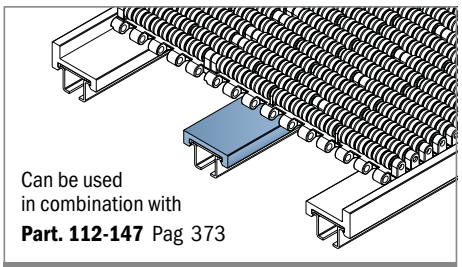

Can be used
in combination with
Part. 112-147 Pag 373

Example of application

Oadby Core product range
Oadby Available from stock in Leicester | Easy Available from stock in Italy | Standard Produced to order in Italy

Movex

110

Profilo "U" / *U-Profile / U-Profil*

Delivery: Easy Standard

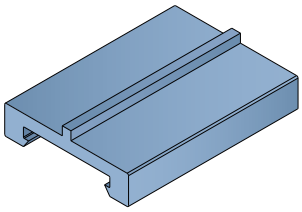

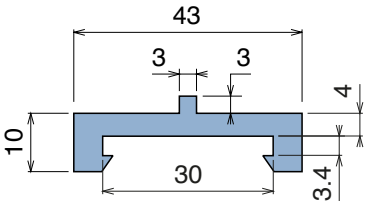

Article-Nr.	Material	Availability	Supply
11000BC	BluLub	On request	3 m bars
11000B	BluLub	On request	6 m bars
11000B-30	BluLub	On request	30 m coils
11003C	Ti-White	On request	3 m bars
11003	Ti-White	On request	6 m bars
11003-30	Ti-White	On request	30 m coils
11001C	Black	Stock item	3 m bars
11001	Black	On request	6 m bars
11001-30	Black	On request	30 m coils
11005C	Blue	On request	3 m bars
11005	Blue	On request	6 m bars
11005-30	Blue	On request	30 m coils
11002C	Green	Stock item	3 m bars
11002	Green	On request	6 m bars
11002-30	Green	On request	30 m coils

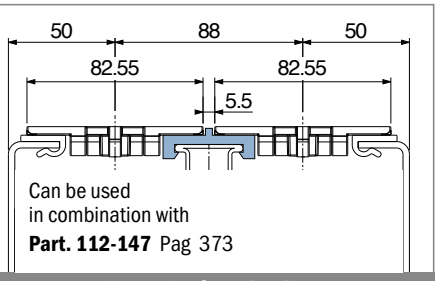

Can be used
in combination with
Part. 112-147 Pag 373

Example of application

156

Profilo "U" / *U-Profile / U-Profil*

Delivery: Easy Standard

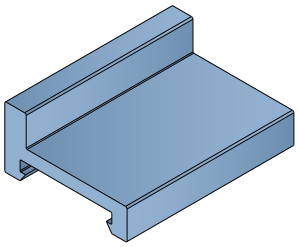

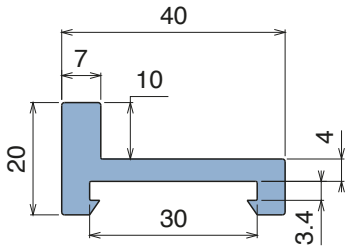

Article-Nr.	Material	Availability	Supply
15601BC	BluLub	On request	3 m bars
15601B	BluLub	On request	6 m bars
15603C	Ti-White	On request	3 m bars
15603	Ti-White	On request	6 m bars
15601C	Black	Stock item	3 m bars
15601	Black	On request	6 m bars
15605C	Blue	On request	3 m bars
15605	Blue	On request	6 m bars
15602C	Green	Stock item	3 m bars
15602	Green	On request	6 m bars

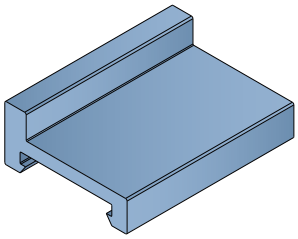

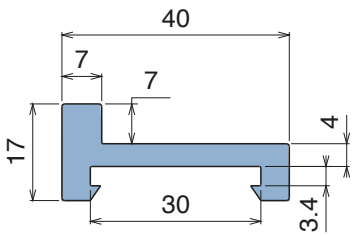

Article-Nr.	Material	Availability	Supply
15699BC	BluLub	Stock item	3 m bars
15699WC	Ti-White	On request	3 m bars
15699NC	Black	On request	3 m bars
15694C	Blue	On request	3 m bars
15699C	Green	Stock item	3 m bars

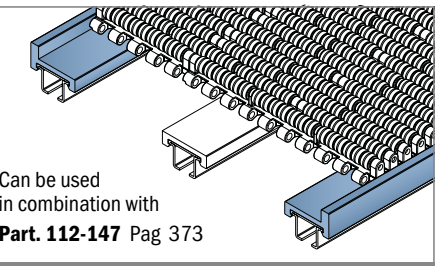

Can be used
in combination with
Part. 112-147 Pag 373

Example of application

149

Profilo "U" / *U-Profile / U-Profil*

Delivery: Easy Standard Coils available

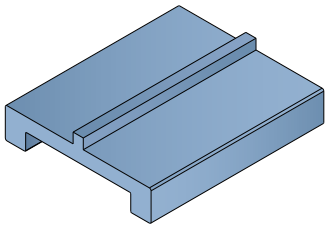

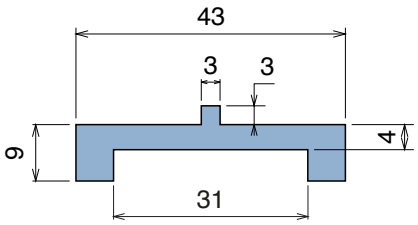

Article-Nr.	Material	Availability	Supply
14950BC	BluLub	On request	3 m bars
14950B	BluLub	On request	6 m bars
14953C	Ti-White	On request	3 m bars
14953	Ti-White	On request	6 m bars
14950C	Black	Stock item	3 m bars
14950	Black	On request	6 m bars
14955C	Blue	On request	3 m bars
14955	Blue	On request	6 m bars
14952C	Green	Stock item	3 m bars
14952	Green	On request	6 m bars

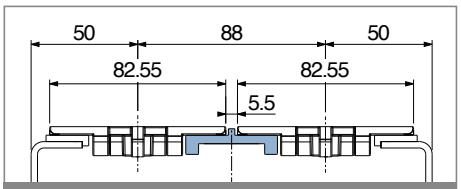

Example of application

177

Profilo "U" / *U-Profile / U-Profil*

Delivery: Easy Standard

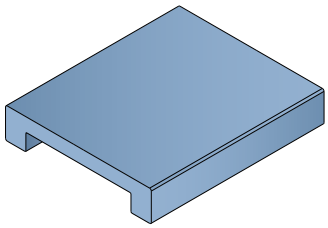

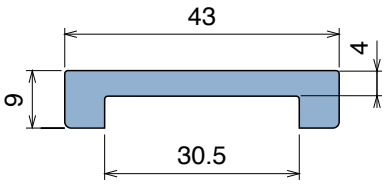

Article-Nr.	Material	Availability	Supply
17701BC	BluLub	Stock item	3 m bars
17701B	BluLub	On request	6 m bars
17701B-30	BluLub	On request	30 m coils
17703C	Ti-White	On request	3 m bars
17703	Ti-White	On request	6 m bars
17703-30	Ti-White	On request	30 m coils
17701C	Black	Stock item	3 m bars
17701	Black	Stock item	6 m bars
17701-30	Black	On request	30 m coils
17705C	Blue	On request	3 m bars
17705	Blue	On request	6 m bars
17705-30	Blue	On request	30 m coils
17702C	Green	Stock item	3 m bars
17702	Green	On request	6 m bars
17702-30	Green	On request	30 m coils

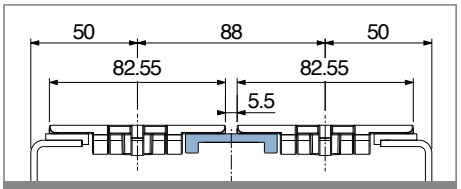

Example of application

Oadby Core product range
Oadby Available from stock in Leicester
Easy Available from stock in Italy
Standard Produced to order in Italy
Movex

1059

Profilo "U" / *U-Profile / U-Profil*

Delivery: Easy Standard Coils available

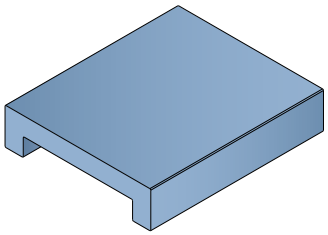

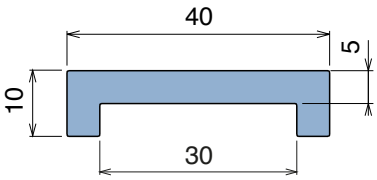

Article-Nr.	Material	Availability	Supply
105901BC	BluLub	Stock item	3 m bars
105901B	BluLub	On request	6 m bars
105901B-30	BluLub	On request	30 m coils
105903C	Ti-White	On request	3 m bars
105903	Ti-White	On request	6 m bars
105903-30	Ti-White	On request	30 m coils
105901C	Black	Stock item	3 m bars
105901	Black	On request	6 m bars
105901-30	Black	On request	30 m coils
105905C	Blue	On request	3 m bars
105905	Blue	On request	6 m bars
105905-30	Blue	On request	30 m coils
105902C	Green	Stock item	3 m bars
105902	Green	On request	6 m bars
105902-30	Green	On request	30 m coils

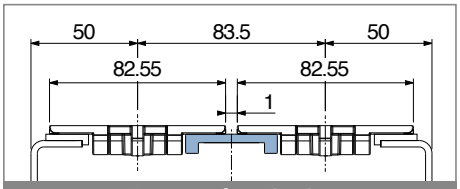

Example of application

178

Profilo "U" / *U-Profile / U-Profil*

Delivery: Easy Standard Coils available

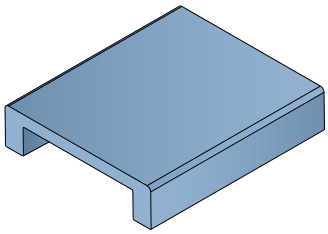

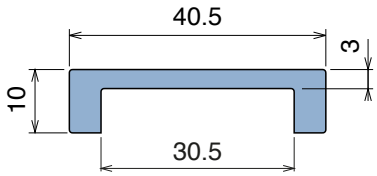

Article-Nr.	Material	Availability	Supply
17801BC	BluLub	Stock item	3 m bars
17801B	BluLub	On request	6 m bars
17801B-30	BluLub	Stock item	30 m coils
17803C	Ti-White	On request	3 m bars
17803	Ti-White	On request	6 m bars
17803-30	Ti-White	Stock item	30 m coils
17801C	Black	Stock item	3 m bars
17801	Black	On request	6 m bars
17801-30	Black	On request	30 m coils
17805C	Blue	On request	3 m bars
17805	Blue	On request	6 m bars
17805-30	Blue	On request	30 m coils
17802C	Green	Stock item	3 m bars
17802	Green	On request	6 m bars
17802-30	Green	Stock item	30 m coils

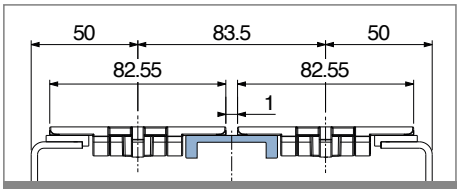

Example of application

111

Profilo "U" / *U-Profile / U-Profil*

Delivery: **Easy** **Standard** Coils available

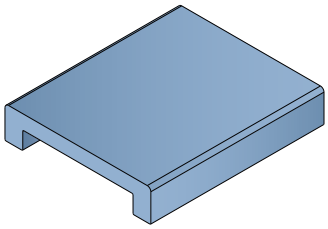

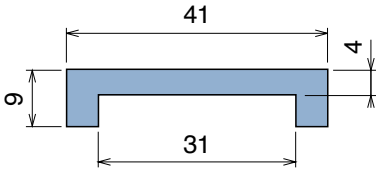

Article-Nr.	Material	Availability	Supply
11101BC	BluLub	Stock item	3 m bars
11101B	BluLub	On request	6 m bars
11101B-30	BluLub	On request	30 m coils
11103C	Ti-White	On request	3 m bars
11103	Ti-White	On request	6 m bars
11103-30	Ti-White	On request	30 m coils
11101C	Black	Stock item	3 m bars
11101	Black	Stock item	6 m bars
11101-30	Black	Stock item	30 m coils
11105C	Blue	On request	3 m bars
11105	Blue	On request	6 m bars
11105-30	Blue	On request	30 m coils
11102C	Green	Stock item	3 m bars
11102	Green	Stock item	6 m bars
11102-30	Green	On request	30 m coils

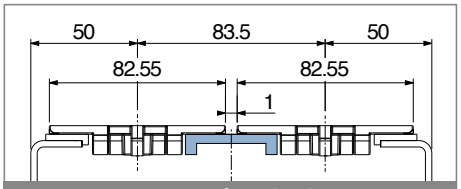

Example of application

1060

Profilo "U" / *U-Profile / U-Profil*

Delivery: **Easy** **Standard** Coils available

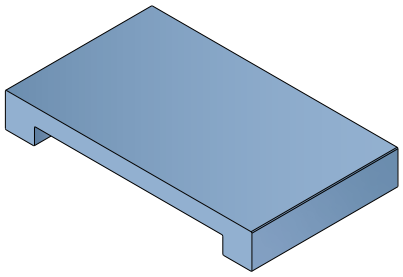

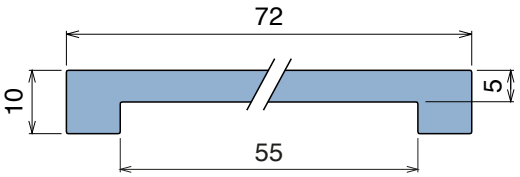

Article-Nr.	Material	Availability	Supply
106000BC	BluLub	On request	3 m bars
106000B	BluLub	On request	6 m bars
106003C	Ti-White	On request	3 m bars
106003	Ti-White	On request	6 m bars
106001C	Black	Stock item	3 m bars
106001	Black	On request	6 m bars
106005C	Blue	On request	3 m bars
106005	Blue	On request	6 m bars
106002C	Green	Stock item	3 m bars
106002	Green	Stock item	6 m bars

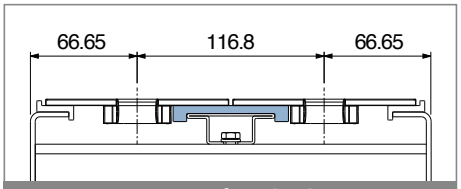

Example of application

Oadby Core product range

Oadby Available from stock in Leicester | Easy Available from stock in Italy | Standard Produced to order in Italy

Movex®

199

Profilo "U" / *U-Profile / U-Profil*

Delivery: **Easy** **Standard** Coils available

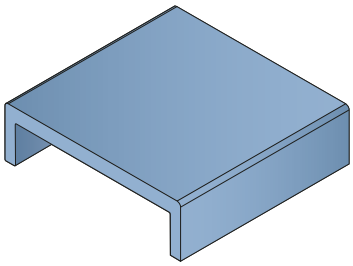

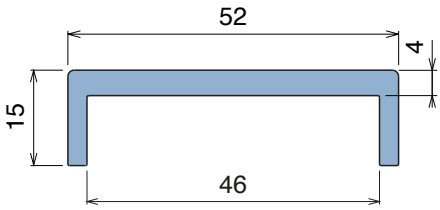

Article-Nr.	Material	Availability	Supply
19976BC	BluLub	On request	3 m bars
19976B	BluLub	On request	6 m bars
19976C	Ti-White	Stock item	3 m bars
19976	Ti-White	On request	6 m bars
19976BLC	Blue	On request	3 m bars
19976BL	Blue	On request	6 m bars

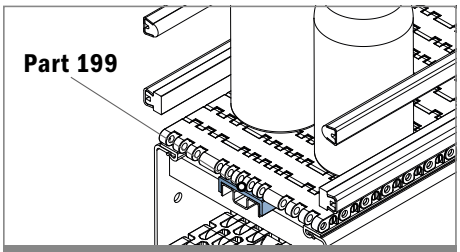

Example of application

199

Profilo "U" / *U-Profile / U-Profil*

Delivery: **Easy** **Standard** Coils available

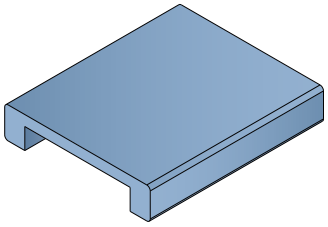

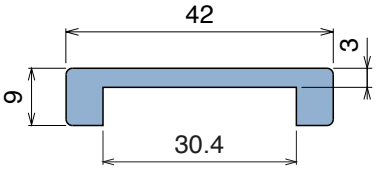

Article-Nr.	Material	Availability	Supply
19944B-30	BluLub	Stock item	30 m coils
19944W-30	Ti-White	On request	30 m coils
19944-30	Black	On request	30 m coils
19944BL-30	Blue	On request	30 m coils
19940-30	Green	Stock item	30 m coils

Staggered version

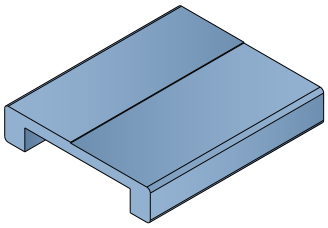

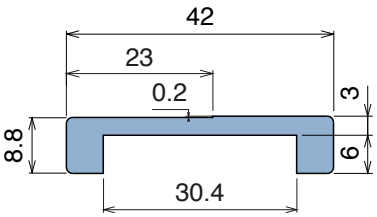

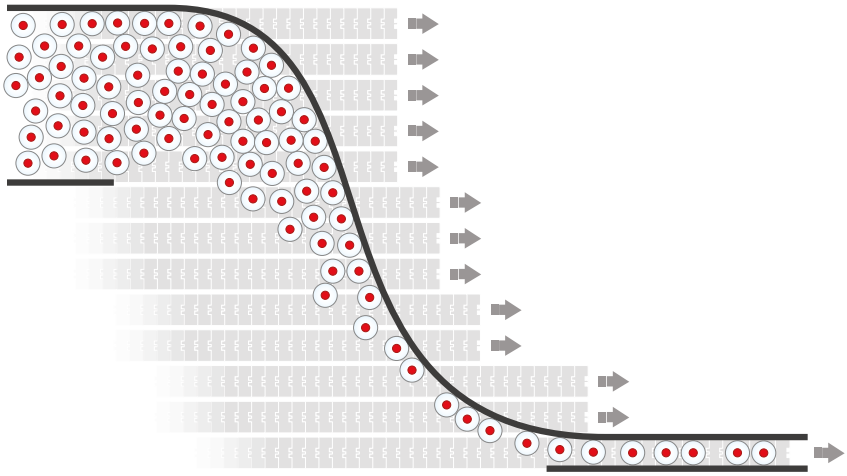

Article-Nr.	Material	Availability	Supply
19945B-30	BluLub	Stock item	30 m coils
19945W-30	Ti-White	On request	30 m coils
19945-30	Black	Stock item	30 m coils
19945BL-30	Blue	On request	30 m coils
19946-30	Green	Stock item	30 m coils

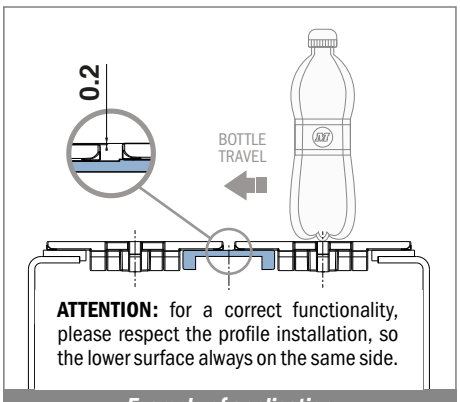

Example of application

NEW 1080

Profilo "U" / *U-Profile / U-Profil*

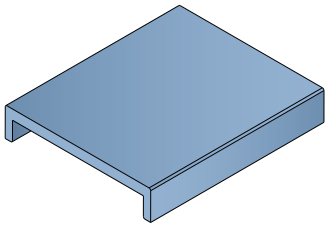

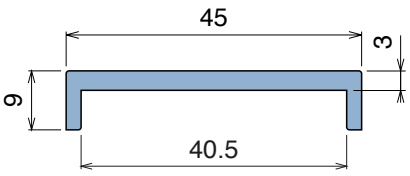

Article-Nr.	Material	Availability	Supply
108000C	BluLub	On request	3 m bars
108003C	Ti-White	On request	3 m bars
108001C	Black	On request	3 m bars
108005C	Blue	On request	3 m bars
108002C	Green	On request	3 m bars

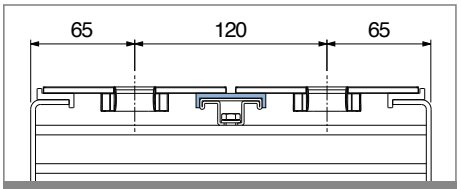

Example of application

NEW 1081

Profilo "U" / *U-Profile / U-Profil*

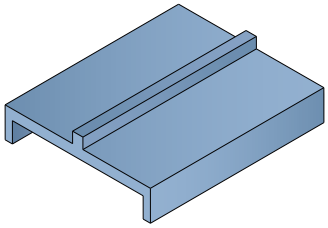

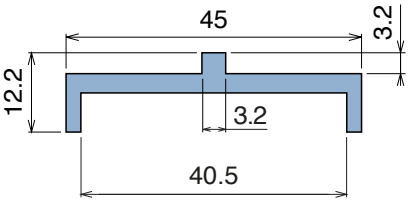

Article-Nr.	Material	Availability	Supply
108100BC	BluLub	On request	3 m bars
108100B	BluLub	On request	6 m bars
108103C	Ti-White	On request	3 m bars
108103	Ti-White	On request	6 m bars
108101C	Black	On request	3 m bars
108101	Black	On request	6 m bars
108105C	Blue	On request	3 m bars
108105	Blue	On request	6 m bars
108102C	Green	On request	3 m bars
108102	Green	On request	6 m bars

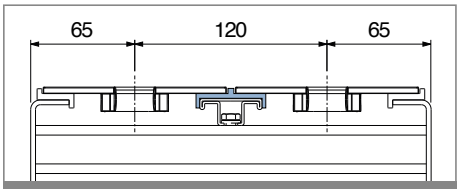

Example of application

Oadby Core product range

Oadby Available from stock in Leicester | Easy Available from stock in Italy | Standard Produced to order in Italy

Movex®

133

Profilo "U" assemblato clip-on / *U-Profile assembled clip-on* / *U-Profil montiert clip-on*

Delivery: Easy Standard

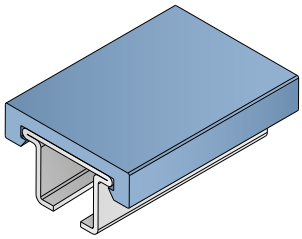

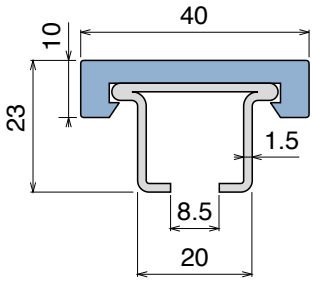

Article-Nr.	Material	Metal	Availability	Supply
13305BC	BluLub	AISI 304	Stock item	3 m bars
13305B	BluLub	AISI 304	On request	6 m bars
13307C	Ti-White	AISI 304	On request	3 m bars
13307	Ti-White	AISI 304	On request	6 m bars
13303C	Black	AISI 304	Stock item	3 m bars
13303	Black	AISI 304	On request	6 m bars
13303BLC	Blue	AISI 304	On request	3 m bars
13303BL	Blue	AISI 304	On request	6 m bars
13301C	Green	AISI 304	Stock item	3 m bars
13301	Green	AISI 304	On request	6 m bars

Article-Nr.	Material	Metal	Availability	Supply
13306BC	BluLub	AISI 430	Stock item	3 m bars
13306B	BluLub	AISI 430	On request	6 m bars
13308C	Ti-White	AISI 430	On request	3 m bars
13308	Ti-White	AISI 430	On request	6 m bars
13304C	Black	AISI 430	Stock item	3 m bars
13304	Black	AISI 430	On request	6 m bars
13304BLC	Blue	AISI 430	On request	3 m bars
13304BL	Blue	AISI 430	On request	6 m bars
13302C	Green	AISI 430	Stock item	3 m bars
13302	Green	AISI 430	On request	6 m bars

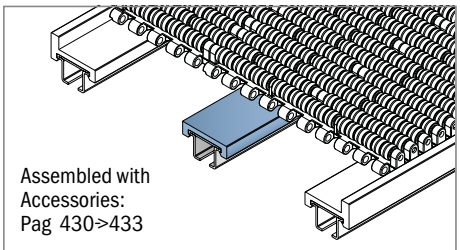

Assembled with Accessories: Pag 430>433

Example of application

148

Profilo "U" assemblato clip-on / *U-Profile assembled clip-on* / *U-Profil montiert clip-on*

Delivery: Easy Standard

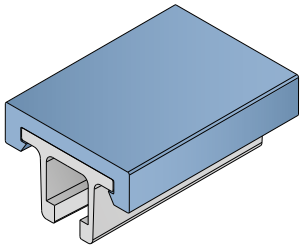

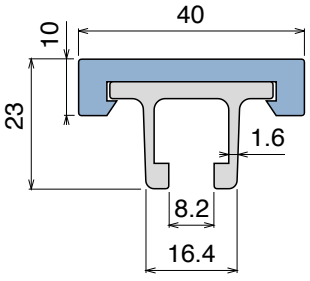

Article-Nr.	Material	Availability	Supply
14801BC	BluLub	Stock item	3 m bars
14801B	BluLub	On request	6 m bars
14803C	Ti-White	Stock item	3 m bars
14803	Ti-White	On request	6 m bars
14802C	Black	Stock item	3 m bars
14802	Black	On request	6 m bars
14805C	Blue	On request	3 m bars
14805	Blue	On request	6 m bars
14801C	Green	Stock item	3 m bars
14801	Green	On request	6 m bars

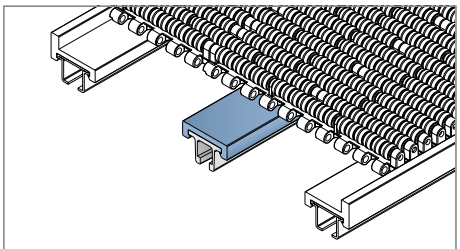

Example of application

157

Profilo "U" assemblato clip-on / *U-Profile assembled clip-on / U-Profil montiert clip-on*

Delivery: Easy Standard

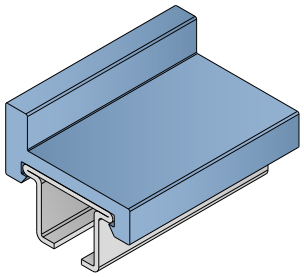

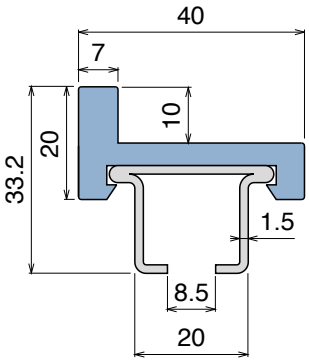

Article-Nr.	Material	Metal	Availability	Supply
15700BC	BluLub	AISI 304	On request	3 m bars
15700B	BluLub	AISI 304	On request	6 m bars
15703C	Ti-White	AISI 304	On request	3 m bars
15703	Ti-White	AISI 304	On request	6 m bars
15704C	Black	AISI 304	On request	3 m bars
15704	Black	AISI 304	On request	6 m bars
15705C	Blue	AISI 304	On request	3 m bars
15705	Blue	AISI 304	On request	6 m bars
15701C	Green	AISI 304	Stock item	3 m bars
15701C	Green	AISI 304	On request	6 m bars

Article-Nr.	Material	Metal	Availability	Supply
15706BC	BluLub	AISI 430	On request	3 m bars
15706B	BluLub	AISI 430	On request	6 m bars
15707C	Ti-White	AISI 430	On request	3 m bars
15707	Ti-White	AISI 430	On request	6 m bars
15708C	Black	AISI 430	On request	3 m bars
15708	Black	AISI 430	On request	6 m bars
15706C	Blue	AISI 430	On request	3 m bars
15706	Blue	AISI 430	On request	6 m bars
15702C	Green	AISI 430	Stock item	3 m bars
15702	Green	AISI 430	On request	6 m bars

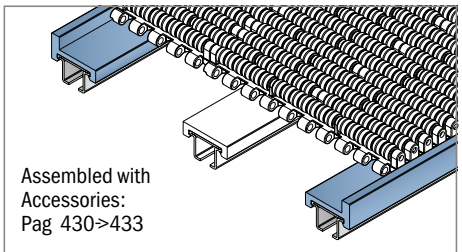

Assembled with Accessories: Pag 430>433

Example of application

157

Profilo "U" assemblato clip-on / *U-Profile assembled clip-on / U-Profil montiert clip-on*

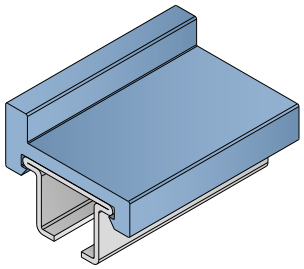

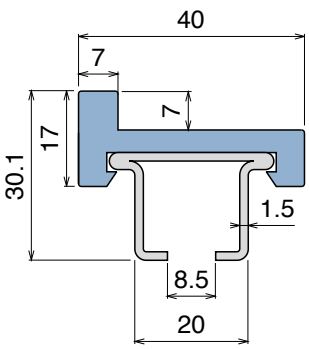

Article-Nr.	Material	Metal	Availability	Supply
15799BC	BluLub	AISI 304	On request	3 m bars
15799WC	Ti-White	AISI 304	On request	3 m bars
15799NC	Black	AISI 304	On request	3 m bars
15799BLC	Blue	AISI 304	On request	3 m bars
15799C	Green	AISI 304	On request	3 m bars

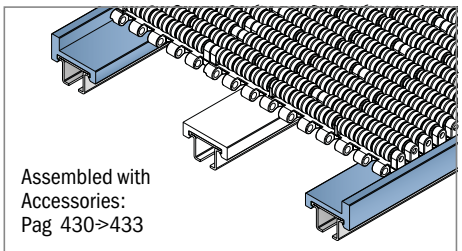

Assembled with Accessories: Pag 430>433

Example of application

Oadby Core product range

Oadby Available from stock in Leicester | Easy Available from stock in Italy | Standard Produced to order in Italy

Movex

118

Profilo in Acciaio inox / *Stainless steel profile* / *Edelstahl-Profil*

Delivery: Easy Standard

Article-Nr.	Material	Availability	Supply
11801C	AISI 304	Stock item	3 m bars
11801	AISI 304	Stock item	6 m bars
11802C	AISI 430	Stock item	3 m bars
11802	AISI 430	On request	6 m bars

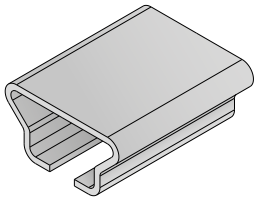

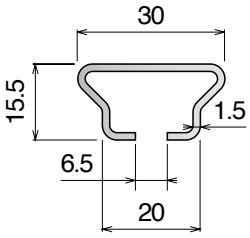

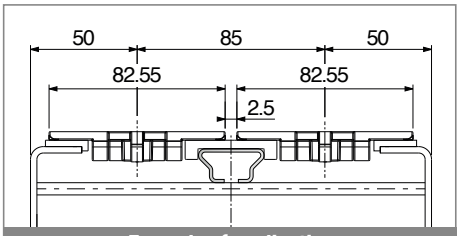

Example of application

112

Profilo in Acciaio inox / *Stainless steel profile* / *Edelstahl-Profil*

NEW

Delivery: Easy Standard

Article-Nr.	Material	Availability	Supply	Profile cover
11201C	AISI 304	Stock item	3 m bars	301401
11201	AISI 304	Stock item	6 m bars	301401
11202C	AISI 430	Stock item	3 m bars	301401
11202	AISI 430	Stock item	6 m bars	301401

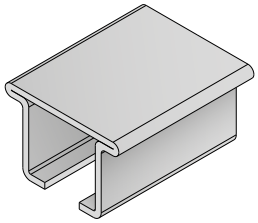

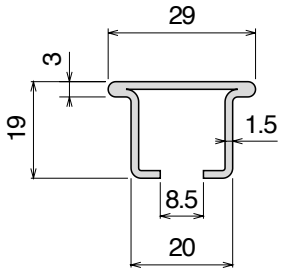

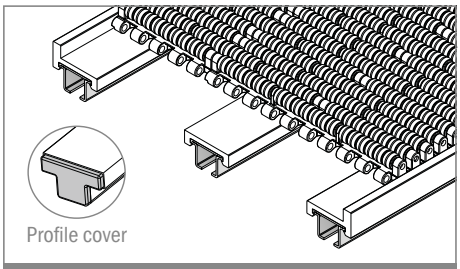

Example of application

147

Profilo in alluminio / *Aluminum profile* / *Aluminium-Profil*

NEW

Delivery: Easy Standard

Article-Nr.	Material	Availability	Supply	Profile cover
14701C	Aluminum	Stock item	3 m bars	301402
14701	Aluminum	Stock item	6 m bars	301402

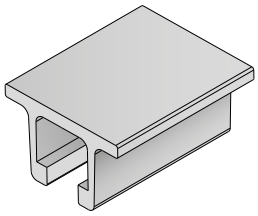

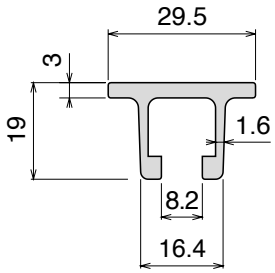

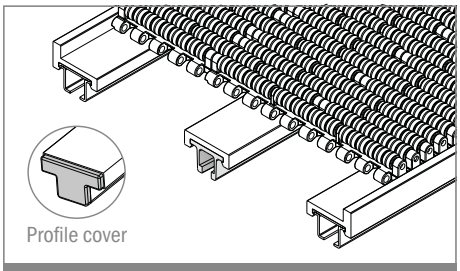

Example of application

1041

Profilo "C" / *C-Profile / C-Profil*

Delivery: Easy | Standard — Fit on 25 x 5 mm

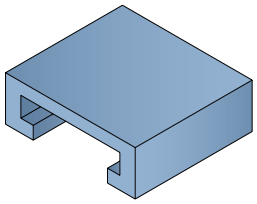

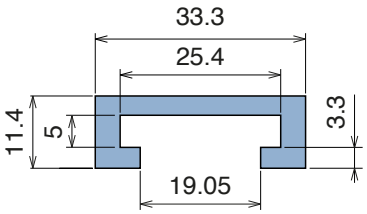

North America STANDARD

Article-Nr.	Material	Availability	Supply
104100BC	BluLub	On request	3 m bars
104100B	BluLub	On request	6 m bars
104103C	Ti-White	Stock item	3 m bars
104103	Ti-White	On request	6 m bars
104105C	Blue	On request	3 m bars
104105	Blue	On request	6 m bars
104102C	Green	On request	3 m bars
104102	Green	On request	6 m bars

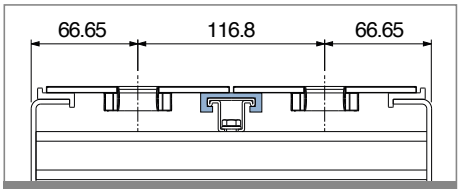

Example of application

NEW

1082

Profilo "C" / *C-Profile / C-Profil*

Fit on 38.1 x 6.35 mm

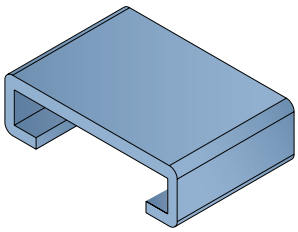

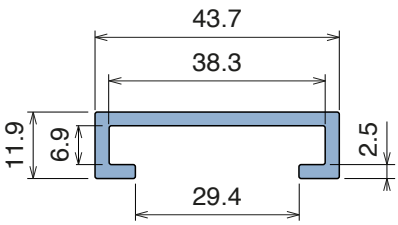

Article-Nr.	Material	Availability	Supply
108200BC	BluLub	On request	3 m bars
108200B	BluLub	On request	6 m bars
108203C	Ti-White	On request	3 m bars
108203	Ti-White	On request	6 m bars
108205C	Blue	On request	3 m bars
108205	Blue	On request	6 m bars

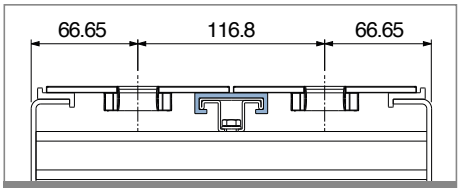

Example of application

1044

Profilo "C" / *C-Profile / C-Profil*

Delivery: Easy | Standard — Fit on 38.1 x 12.7 mm

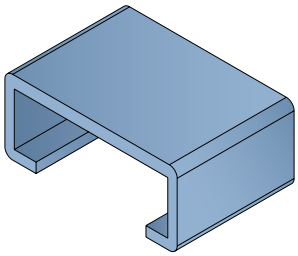

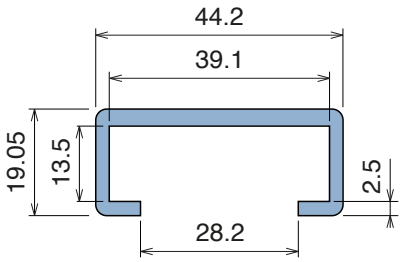

North America STANDARD

Article-Nr.	Material	Availability	Supply
104400BC	BluLub	On request	3 m bars
104400B	BluLub	On request	6 m bars
104403C	Ti-White	Stock item	3 m bars
104403	Ti-White	On request	6 m bars
104405C	Blue	On request	3 m bars
104405	Blue	On request	6 m bars

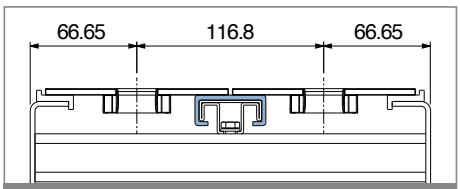

Example of application

Oadby Core product range
Oadby Available from stock in Leicester | Easy Available from stock in Italy | Standard Produced to order in Italy

Movex®

1053

Profilo "C" / *C-Profile / C-Profil*

Delivery: Easy Standard | Fit on 38.1 x 6.35 mm

North America STANDARD

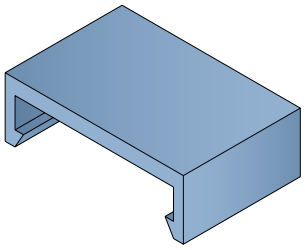

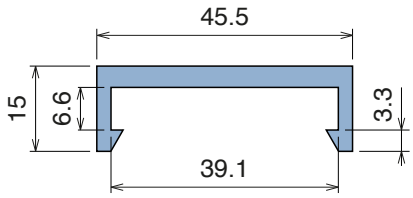

Article-Nr.	Material	Availability	Supply
105300BC	BluLub	On request	3 m bars
105300B	BluLub	On request	6 m bars
105303C	Ti-White	Stock item	3 m bars
105303	Ti-White	On request	6 m bars
105305C	Blue	On request	3 m bars
105305	Blue	On request	6 m bars

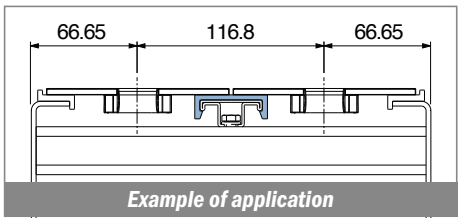

Example of application

1054

Profilo "C" / *C-Profile / C-Profil*

Delivery: Easy Standard | Fit on 38.1 x 6.35 mm

North America STANDARD

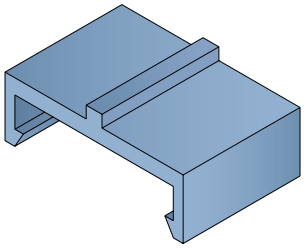

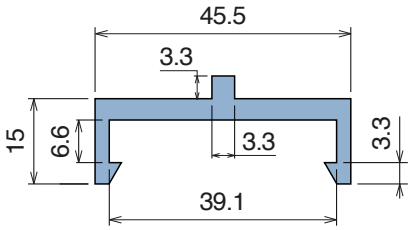

Article-Nr.	Material	Availability	Supply
105400BC	BluLub	On request	3 m bars
105400B	BluLub	On request	6 m bars
105403C	Ti-White	Stock item	3 m bars
105403	Ti-White	On request	6 m bars
105405C	Blue	On request	3 m bars
105405	Blue	On request	6 m bars

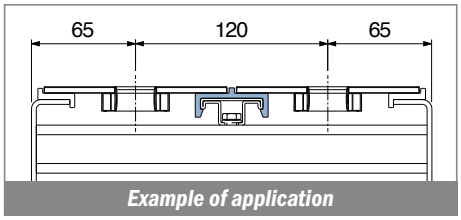

Example of application

137

Profilo "C" / *C-Profile / C-Profil*

Delivery: Easy Standard | Fit on 40 x 8 mm / 40 x 10 mm

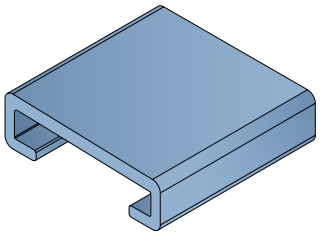

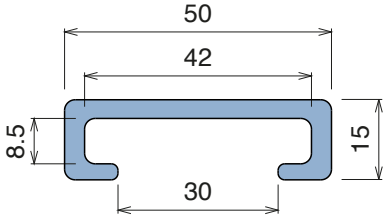

Article-Nr.	Material	Availability	Supply
13701BC	BluLub	Stock item	3 m bars
13701B	BluLub	On request	6 m bars
13703C	Ti-White	Stock item	3 m bars
13703	Ti-White	On request	6 m bars
13702C	Black	Stock item	3 m bars
13702	Black	On request	6 m bars
13705C	Blue	On request	3 m bars
13705	Blue	On request	6 m bars
13701C	Green	Stock item	3 m bars
13701	Green	Stock item	6 m bars

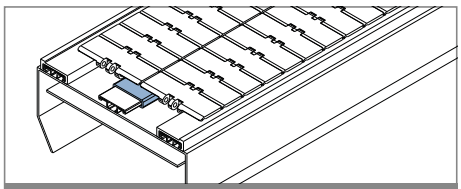

Example of application

137

Profilo "C" / *C-Profile / C-Profil*

Delivery: **Easy** **Standard** Fit on 40 x 8 mm / 40 x 10 mm

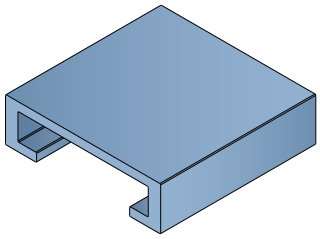

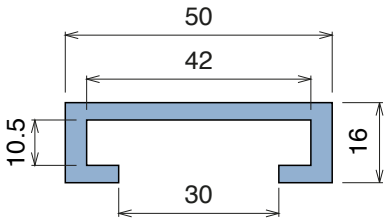

Article-Nr.	Material	Availability	Supply
13711BC	BluLub	Stock item	3 m bars
13711B	BluLub	On request	6 m bars
13713C	Ti-White	On request	3 m bars
13713	Ti-White	On request	6 m bars
13712C	Black	On request	3 m bars
13712	Black	On request	6 m bars
13715C	Blue	On request	3 m bars
13715	Blue	On request	6 m bars
13711C	Green	Stock item	3 m bars
13711	Green	Stock item	6 m bars

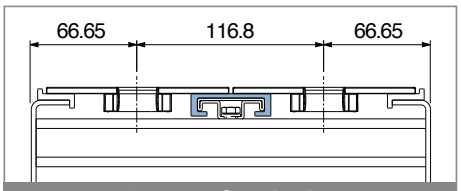

Example of application

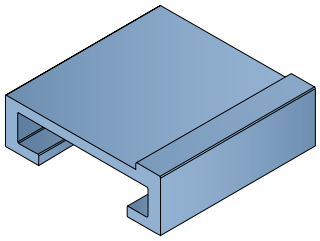

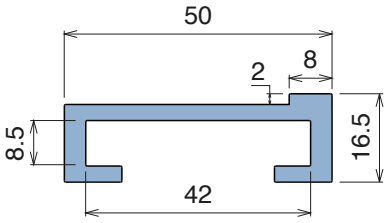

Article-Nr.	Material	Availability	Supply
13720BC	BluLub	On request	3 m bars
13720B	BluLub	On request	6 m bars
13720C	Ti-White	On request	3 m bars
13720	Ti-White	On request	6 m bars
13725C	Blue	On request	3 m bars
13725	Blue	On request	6 m bars

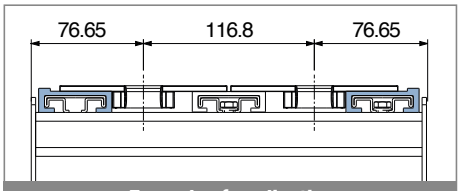

Example of application

1042

Profilo "C" / *C-Profile / C-Profil*

North America STANDARD

Delivery: **Easy** **Standard** Fit on 50 x 6 mm

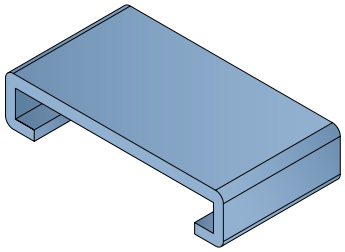

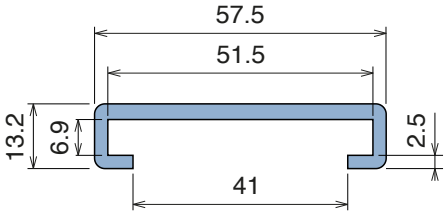

Article-Nr.	Material	Availability	Supply
104200BC	BluLub	On request	3 m bars
104200B	BluLub	On request	6 m bars
104203C	Ti-White	Stock item	3 m bars
104203	Ti-White	On request	6 m bars
104205C	Blue	On request	3 m bars
104205	Blue	On request	6 m bars
104201C	Green	On request	3 m bars
104201	Green	On request	6 m bars

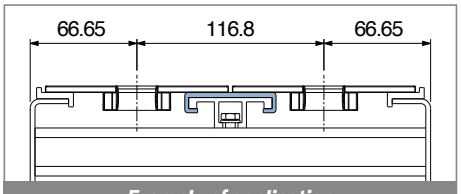

Example of application

Oadby Core product range
Oadby Available from stock in Leicester
Easy Available from stock in Italy
Standard Produced to order in Italy

Movex

1045

Profilo "C" / *C-Profile / C-Profil*

Fit on 50.8 x 12.7 mm

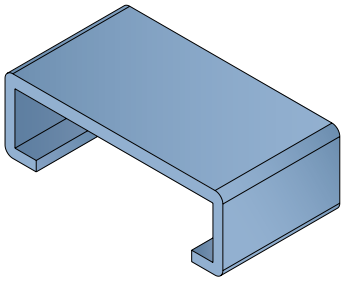

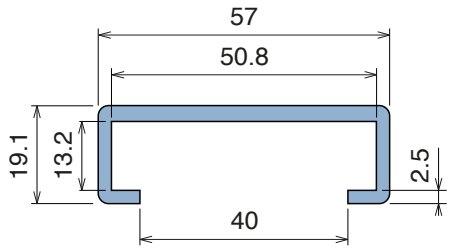

North America STANDARD

Article-Nr.	Material	Availability	Supply
104500BC	BluLub	On request	3 m bars
104500B	BluLub	On request	6 m bars
104503C	Ti-White	On request	3 m bars
104503	Ti-White	On request	6 m bars
104505C	Blue	On request	3 m bars
104505	Blue	On request	6 m bars

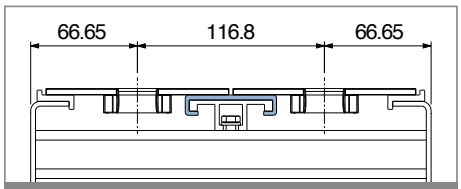

Example of application

158

Profilo "C" / *C-Profile / C-Profil*

Delivery: Easy Standard Fit on 50 x 6 mm

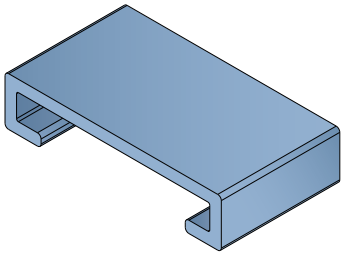

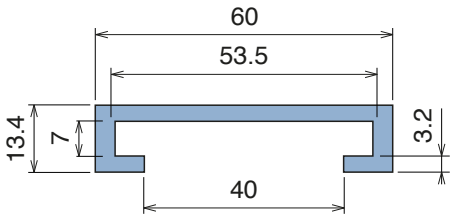

North America STANDARD

Article-Nr.	Material	Availability	Supply
15800BC	BluLub	Stock item	3 m bars
15894C	Ti-White	On request	3 m bars
15898C	Black	Stock item	3 m bars
15894BLC	Blue	On request	3 m bars
15897C	Green	Stock item	3 m bars
15800C	Grey	Stock item	3 m bars

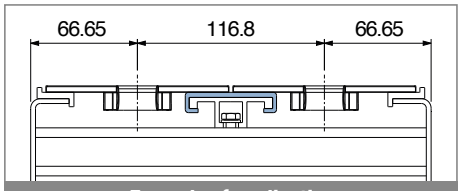

Example of application

163 Profilo "C" / *C-Profile / C-Profil*

Delivery: **Easy** **Standard** Coils available

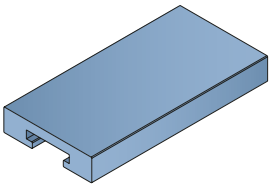

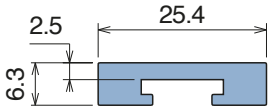

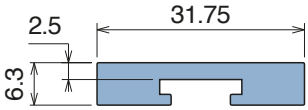

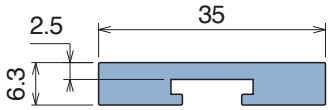

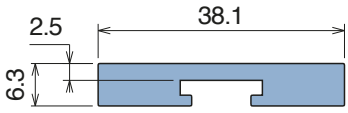

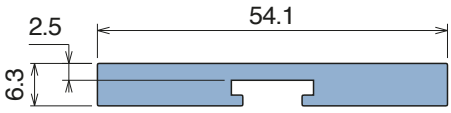

Article-Nr.	Material	A	Availability	Supply
16303BC	BluLub	25,4	Stock item	3 m bars
16303B	BluLub	25,4	On request	6 m bars
16303B-30	BluLub	25,4	Stock item	30 m coils
16313BC	BluLub	31,75	On request	3 m bars
16313B	BluLub	31,75	On request	6 m bars
16313B-30	BluLub	31,75	On request	30 m coils
16323BC	BluLub	35	On request	3 m bars
16323B	BluLub	35	On request	6 m bars
16323B-30	BluLub	35	On request	30 m coils
16324BC	BluLub	38,1	On request	3 m bars
16324B	BluLub	38,1	On request	6 m bars
16324B-30	BluLub	38,1	On request	30 m coils
16325BC	BluLub	54,1	On request	3 m bars
16325B	BluLub	54,1	On request	6 m bars
16325B-30	BluLub	54,1	On request	30 m coils
16303C	Ti-White	25,4	Stock item	3 m bars
16303	Ti-White	25,4	On request	6 m bars
16303-30	Ti-White	25,4	Stock item	30 m coils
16313C	Ti-White	31,75	Stock item	3 m bars
16313	Ti-White	31,75	On request	6 m bars
16313-30	Ti-White	31,75	On request	30 m coils
16323C	Ti-White	35	Stock item	3 m bars
16323	Ti-White	35	On request	6 m bars
16323-30	Ti-White	35	On request	30 m coils
Oadby 16324C	Ti-White	38,1	Stock item	3 m bars
16324	Ti-White	38,1	Stock item	6 m bars
16324-30	Ti-White	38,1	On request	30 m coils
16325C	Ti-White	54,1	On request	3 m bars
16325	Ti-White	54,1	On request	6 m bars
16325-30	Ti-White	54,1	On request	30 m coils
16303BLC	Blue	25,4	On request	3 m bars
16303BL	Blue	25,4	On request	6 m bars
16303BL-30	Blue	25,4	On request	30 m coils
16313BLC	Blue	31,75	On request	3 m bars
16313BL	Blue	31,75	On request	6 m bars
16313BL-30	Blue	31,75	On request	30 m coils
16323BLC	Blue	35	On request	3 m bars
16323BL	Blue	35	On request	6 m bars
16323BL-30	Blue	35	On request	30 m coils
16324BLC	Blue	38,1	On request	3 m bars
16324BL	Blue	38,1	On request	6 m bars
16324BL-30	Blue	38,1	On request	30 m coils
16325BLC	Blue	54,1	On request	3 m bars
16325BL	Blue	54,1	On request	6 m bars
16325BL-30	Blue	54,1	On request	30 m coils

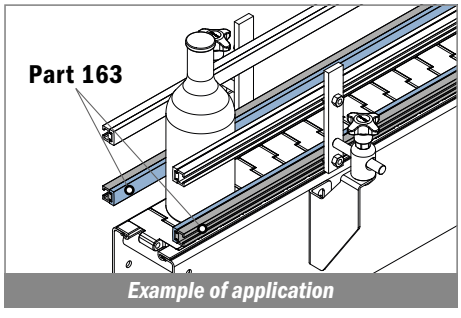

Example of application

Used with
Part 164/165
Pag 380

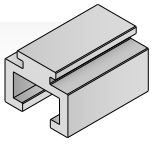

Oadby Core product range
Oadby Available from stock in Leicester
Easy Available from stock in Italy
Standard Produced to order in Italy

Movex

160

Profilo "C" / *C-Profile / C-Profil*

Delivery: Easy Standard

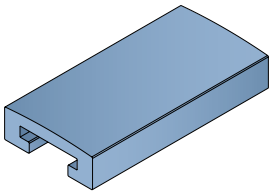

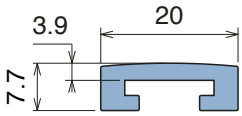

Article-Nr.	Material	Availability	Supply
16003BC	BluLub	Stock item	3 m bars
16003B	BluLub	On request	6 m bars
16003B-30	BluLub	Stock item	30 m coils
16003C	Ti-White	Stock item	3 m bars
16003	Ti-White	Stock item	6 m bars
16003-30	Ti-White	Stock item	30 m coils
16005C	Blue	On request	3 m bars
16005	Blue	On request	6 m bars
16005-30	Blue	On request	30 m coils

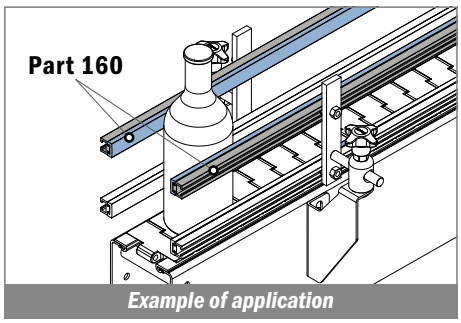

Example of application

Used with
Part 164/165
Pag 380

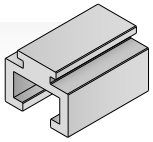

161

Profilo "C" / *C-Profile / C-Profil*

Delivery: Easy Standard Coils available

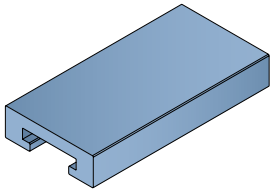

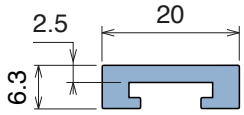

Article-Nr.	Material	Availability	Supply
16103BC	BluLub	On request	3 m bars
16103B	BluLub	On request	6 m bars
16103B-30	BluLub	Stock item	30 m coils
16103C	Ti-White	Stock item	3 m bars
16103	Ti-White	Stock item	6 m bars
16103-30	Ti-White	Stock item	30 m coils
16105C	Blue	On request	3 m bars
16105	Blue	On request	6 m bars
16105-30	Blue	On request	30 m coils

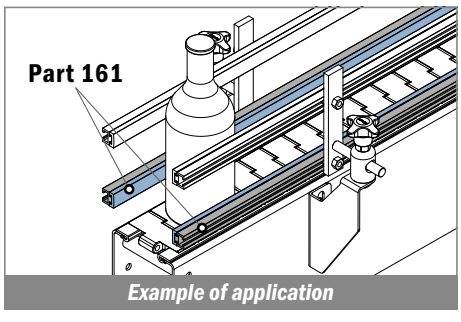

Example of application

Used with
Part 164/165
Pag 380

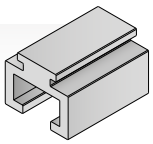

162

Profilo "C" / *C-Profile / C-Profil*

Delivery: Easy | Standard | Coils available

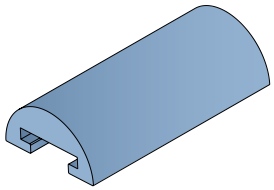

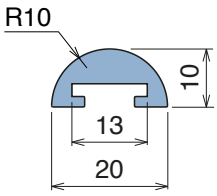

Article-Nr.	Material	Availability	Supply
16202BC	BluLub	Stock item	3 m bars
16202B	BluLub	On request	6 m bars
16202B-30	BluLub	Stock item	30 m coils
16203C	Ti-White	Stock item	3 m bars
16203	Ti-White	On request	6 m bars
16203-30	Ti-White	Stock item	30 m coils
16205C	Blue	On request	3 m bars
16205	Blue	On request	6 m bars
16205-30	Blue	On request	30 m coils
16202C	Green	Stock item	3 m bars
16202	Green	On request	6 m bars
16202-30	Green	Stock item	30 m coils

Used with
Part 164/165
Pag 380

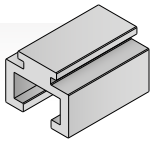

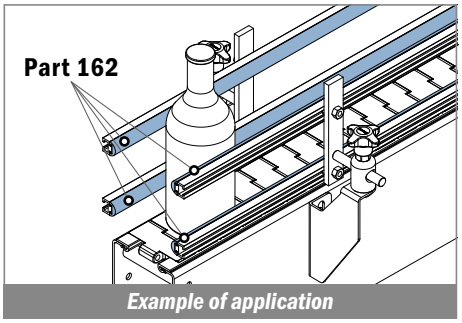

Example of application

164

Guida in alluminio / *Aluminum guide / Aluminium profil*

NEW

Delivery: Easy | Standard

Article-Nr.	Material	Availability	Supply	Profile cover
16401C	Aluminum	Stock item	3 m bars	301403
16401	Aluminum	Stock item	6 m bars	301403

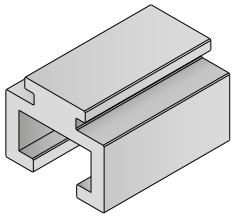

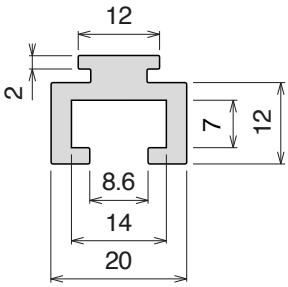

Used with
Part 362 Pag 493
and **Part 1097** Pag 510

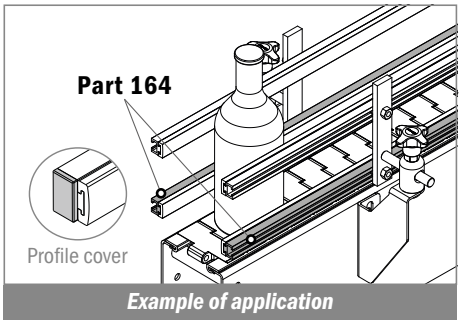

Example of application

165

Guida in alluminio / *Aluminum guide / Aluminium profil*

NEW

Delivery: Easy | Standard

Article-Nr.	Material	Availability	Supply	Profile cover
16501C	Aluminum	Stock item	3 m bars	301404
16501	Aluminum	Stock item	6 m bars	301404

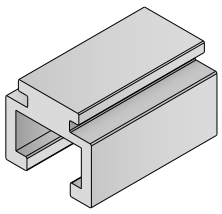

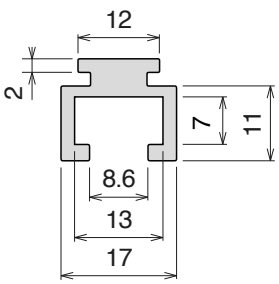

Used with
Part 362 Pag 493
and **Part 1097** Pag 510

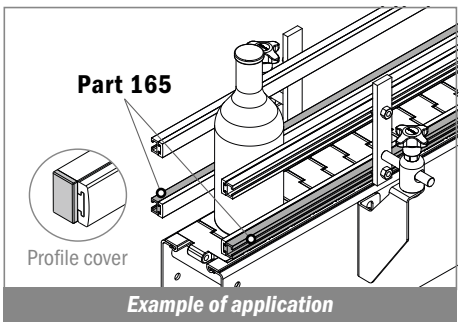

Example of application

1039

Profilo per mezzitondi / *Half round profile for steel rods / Halbmond Profil*

Delivery: Easy Standard

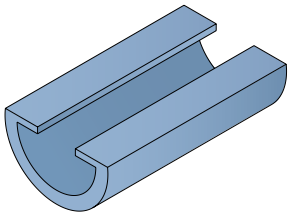

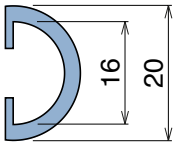

Article-Nr.	Material	Availability	Supply
103923BC	BluLub	On request	3 m bars
103923B	BluLub	On request	6 m bars
103923B-30	BluLub	Stock item	30 m coils
103923B-60	BluLub	On request	60 m coils
103923C	Ti-White	Stock item	3 m bars
103923	Ti-White	On request	6 m bars
103923-30	Ti-White	Stock item	30 m coils
103923-60	Ti-White	Stock item	60 m coils
103925C	Blue	On request	3 m bars
103925	Blue	On request	6 m bars
103925-30	Blue	On request	30 m coils
103925-60	Blue	On request	60 m coils

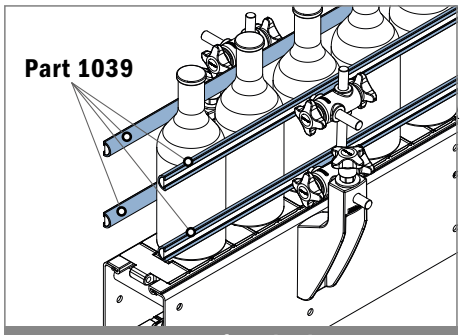

Example of application

NEW

1083

Profilo per mezzitondi / *Half round profile for steel rods / Halbmond Profil*

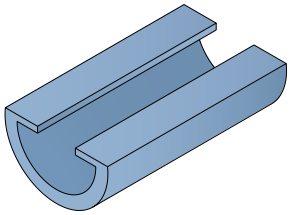

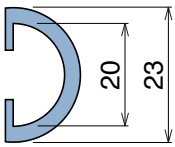

Article-Nr.	Material	Availability	Supply
108300BC	BluLub	On request	3 m bars
108300B	BluLub	On request	6 m bars
108300B-30	BluLub	On request	30 m coils
108300B-60	BluLub	On request	60 m coils
108303C	Ti-White	On request	3 m bars
108303	Ti-White	On request	6 m bars
108303-30	Ti-White	On request	30 m coils
108303-60	Ti-White	On request	60 m coils
108305C	Blue	On request	3 m bars
108305	Blue	On request	6 m bars
108305-30	Blue	On request	30 m coils
108305-60	Blue	On request	60 m coils

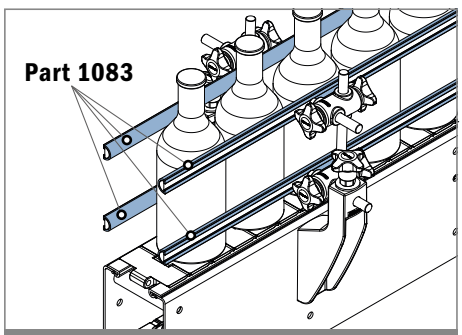

Example of application

166

Profilo per tondini / *Round profile for steel rods / Halbmond Profil*

Delivery: Easy Standard Coils available

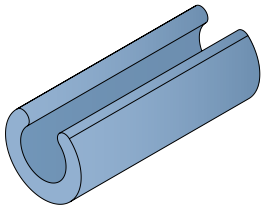

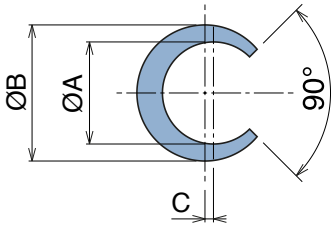

Article-Nr.	A	B	C	Material	Availability	Supply
16601B	8	12	0.5	BluLub	Stock item	30 m coils
16602B	10	14	0.5	BluLub	On request	30 m coils
16603B	12	16	1	BluLub	On request	30 m coils
16604B	16	20	1.5	BluLub	On request	30 m coils
16601	8	12	0.5	Ti-White	Stock item	30 m coils
Oadby 16602	10	14	0.5	Ti-White	Stock item	30 m coils
Oadby 16603	12	16	1	Ti-White	Stock item	30 m coils
Oadby 16604	16	20	1.5	Ti-White	Stock item	30 m coils
16601BL	8	12	0.5	Blue	On request	30 m coils
16602BL	10	14	0.5	Blue	On request	30 m coils
16603BL	12	16	1	Blue	On request	30 m coils
16604BL	16	20	1.5	Blue	On request	30 m coils

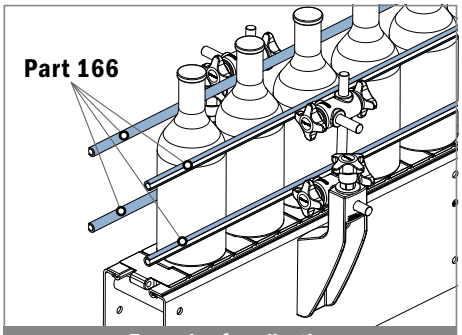

Example of application

154

Guida laterale / *Side guide rail / Seitenführungen*

Delivery: Easy Standard Metal profile: Aluminium

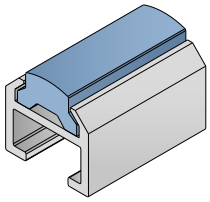

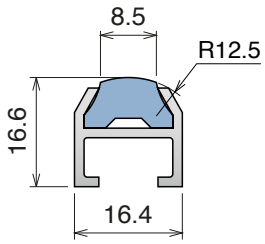

Article-Nr.	Material	Availability	Supply
Oadby 15401BC	BluLub	Stock item	3 m bars
15401B	BluLub	On request	6 m bars
15401C	Ti-White	On request	3 m bars
15401	Ti-White	On request	6 m bars
15405C	Blue	On request	3 m bars
15405	Blue	On request	6 m bars
15402C	Green	On request	3 m bars
15402	Green	On request	6 m bars

Only plastic profile

Article-Nr.	Material	Availability	Supply
15451B-30	BluLub	On request	30 m coils
15451-30	Ti-White	On request	30 m coils
15455-30	Blue	On request	30 m coils
15452-30	Green	On request	30 m coils

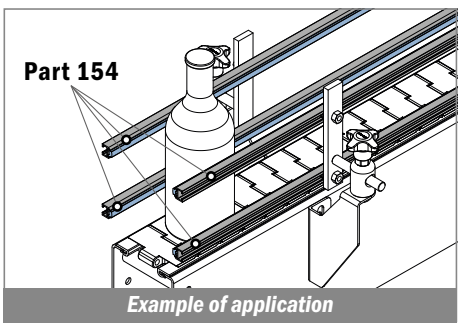

Example of application

Used with
Hex head bolt

Oadby Core product range
Oadby Available from stock in Leicester
Easy Available from stock in Italy
Standard Produced to order in Italy

Movex

155

Guida laterale / *Side guide rail* / *Seitenführungen*

Delivery: Easy Standard **Metal profile:** Aluminium

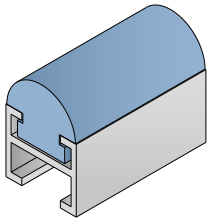

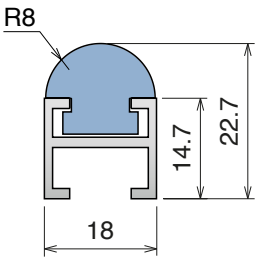

Article-Nr.	Material	Availability	Supply
15500BC	BluLub	On request	3 m bars
15503C	Ti-White	On request	3 m bars
15505C	Blue	On request	3 m bars
15501C	Green	On request	3 m bars

Only plastic profile

Article-Nr.	Material	Availability	Supply
15550B-30	BluLub	On request	30 m coils
15553-30	Ti-White	On request	30 m coils
15555-30	Blue	On request	30 m coils
15551-30	Green	On request	30 m coils

Used with
Part 362 Pag 493
and **Part 1097** Pag 510

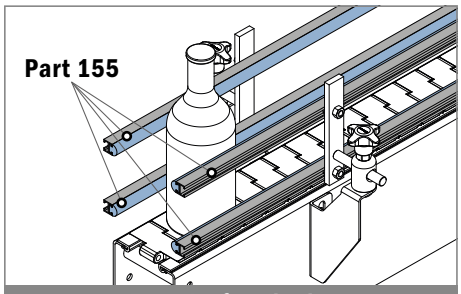

Example of application

134

Guida laterale / *Side guide rail* / *Seitenführungen*

Delivery: Easy Standard **Metal profile:** Stainless steel AISI 304

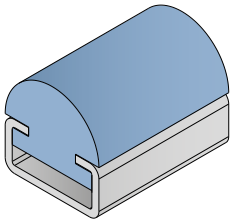

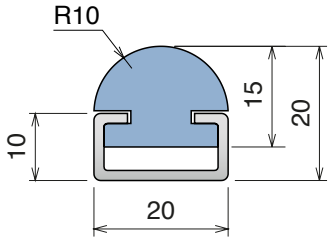

Article-Nr.	Material	Availability	Supply
13400BC	BluLub	On request	3 m bars
13400B	BluLub	On request	6 m bars
13403C	Ti-White	On request	3 m bars
13403	Ti-White	On request	6 m bars
13405C	Blue	On request	3 m bars
13405	Blue	On request	6 m bars
13401C	Green	Stock item	3 m bars
13401	Green	On request	6 m bars

Only plastic profile

Article-Nr.	Material	Availability	Supply
13450B-30	BluLub	On request	30 m coils
13453-30	Ti-White	On request	30 m coils
13455-30	Blue	On request	30 m coils
13451-30	Green	On request	30 m coils

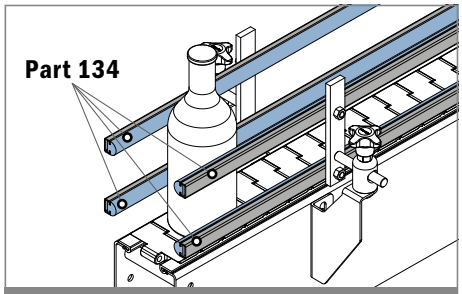

Example of application

199

Piastra di trasferimento / *Transfer plate / Überschubprofil*

Delivery: Easy | Standard | Fit on 3 mm

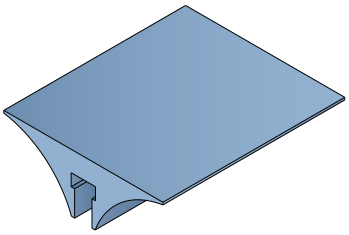

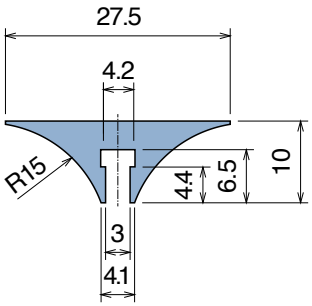

Article-Nr.	Material	Availability	Supply
19960B	BluLub	Stock item	1,5 m bars
19960	Black	Stock item	1,5 m bars

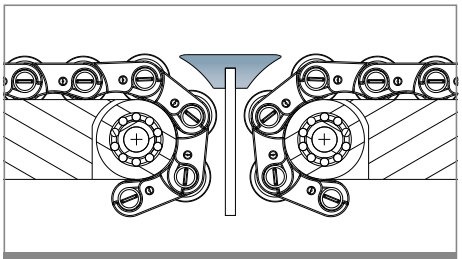

Example of application

238-228-235

NoseBar / *NoseBar / NoseBar*

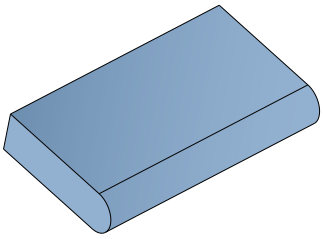

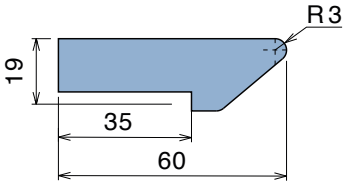

Article-Nr.	Material	Availability	Supply
2381500	BluLub	On request	1,5 m bars

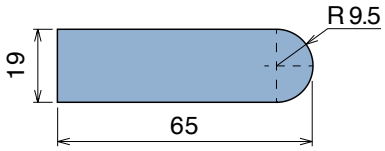

Article-Nr.	Material	Availability	Supply
2281500	BluLub	On request	1,5 m bars

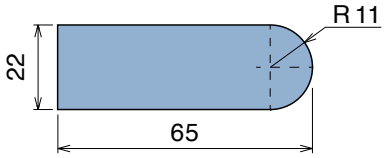

Article-Nr.	Material	Availability	Supply
2351500	BluLub	On request	1,5 m bars

NoseBars Standard

NoseBars with Bearings

NoseBars with Rollers

Machined to width NoseBars are available in the section Modular belts.
Find more details at Pag 272

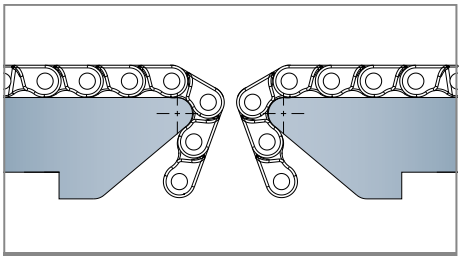

Example of application

Oadby Core product range
Oadby Available from stock in Leicester | Easy Available from stock in Italy | Standard Produced to order in Italy

Movex®

1000

Copri profilo / *Bar cap* / *Abdeckprofil*

Delivery: Easy | Standard — Fit on 1.5 mm (1/16")

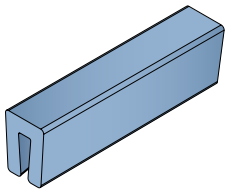

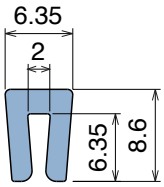

Article-Nr.	Material	Availability	Supply
100000B-30	BluLub	On request	30 m coils
100003-30	Ti-White	Stock item	30 m coils
100005-30	Blue	On request	30 m coils

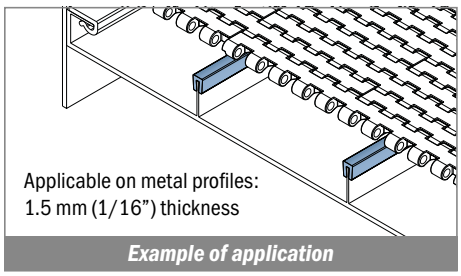

1001

Copri profilo / *Bar cap* / *Abdeckprofil*

Delivery: Easy | Standard — Fit on 1.5 mm (1/16")

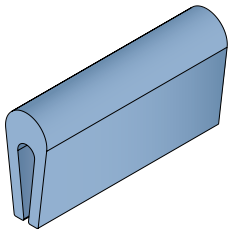

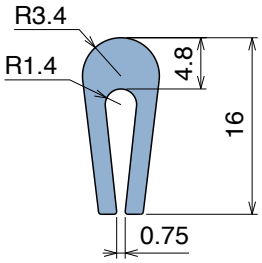

Article-Nr.	Material	Availability	Supply
100103B-30	BluLub	Stock item	30 m coils
100103-30	Ti-White	Stock item	30 m coils
100105-30	Blue	On request	30 m coils

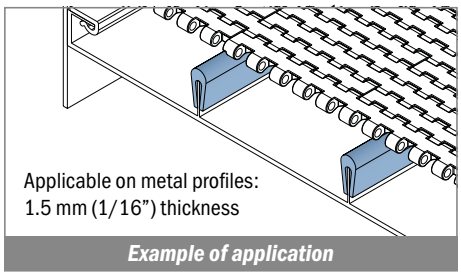

1002

Copri profilo / *Bar cap* / *Abdeckprofil*

Delivery: Easy | Standard — Fit on 3 mm (1/8")

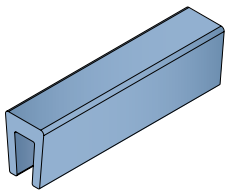

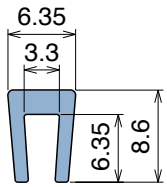

Article-Nr.	Material	Availability	Supply
100200B-30	BluLub	Stock item	30 m coils
100203-30	Ti-White	Stock item	30 m coils
100205-30	Blue	On request	30 m coils

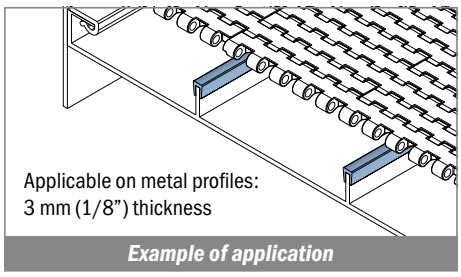

1003

Copri profilo / *Bar cap* / *Abdeckprofil*

Delivery: Easy | Standard — Fit on 3 mm (1/8")

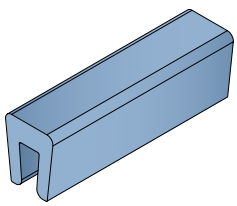

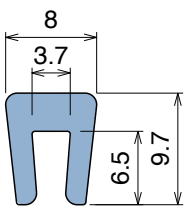

Article-Nr.	Material	Availability	Supply
100300B-30	BluLub	Stock item	30 m coils
100303-30	Ti-White	Stock item	30 m coils
100305-30	Blue	On request	30 m coils

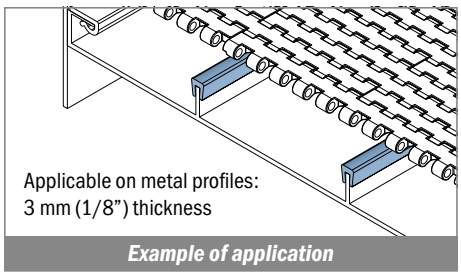

1004

Copri profilo / *Bar cap / Abdeckprofil*

Delivery: **Easy** **Standard** | Fit on 3 mm (1/8")

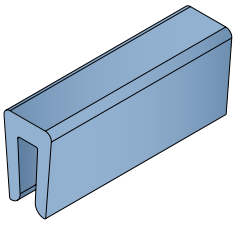

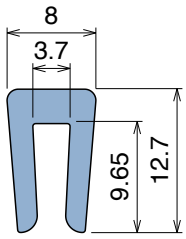

Article-Nr.	Material	Availability	Supply
100400B-30	BluLub	On request	30 m coils
100403-30	Ti-White	Stock item	30 m coils
100405-30	Blue	On request	30 m coils

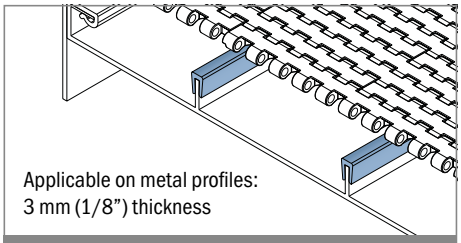

Example of application

NEW 1084

Copri profilo / *Bar cap / Abdeckprofil*

Fit on 3 mm (1/8")

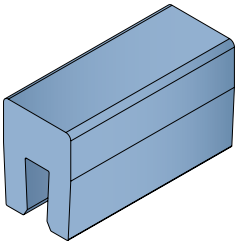

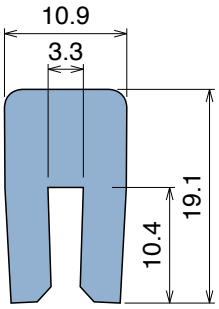

Article-Nr.	Material	Availability	Supply
108400BC	BluLub	On request	3 m bars
108400B	BluLub	On request	6 m bars
108400B-30	BluLub	On request	30 m coils
108403C	Ti-White	On request	3 m bars
108403	Ti-White	On request	6 m bars
108403-30	Ti-White	On request	30 m coils
108405C	Blue	On request	3 m bars
108405	Blue	On request	6 m bars
108405-30	Blue	On request	30 m coils

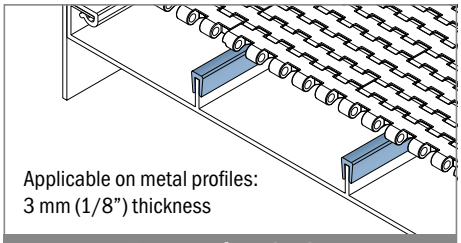

Example of application

NEW 1085

Copri profilo / *Bar cap / Abdeckprofil*

Fit on 3 mm (1/8")

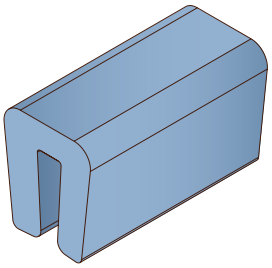

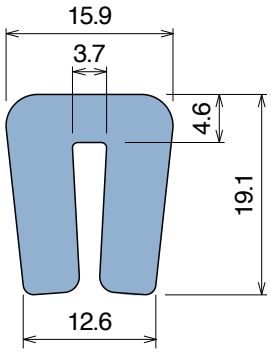

Article-Nr.	Material	Availability	Supply
108500BC	BluLub	On request	3 m bars
108500B	BluLub	On request	6 m bars
108500B-30	BluLub	On request	30 m coils
108503C	Ti-White	On request	3 m bars
108503	Ti-White	On request	6 m bars
108503-30	Ti-White	On request	30 m coils
108505C	Blue	On request	3 m bars
108505	Blue	On request	6 m bars
108505-30	Blue	On request	30 m coils

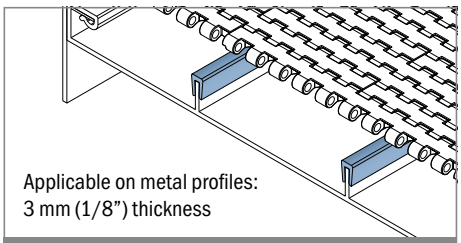

Example of application

Core product range
Available from stock in Leicester
Available from stock in Italy
Produced to order in Italy

Movex

153

Copri profilo / ***Bar cap*** / ***Abdeckprofil***

Delivery: Easy Standard — Fit on 4/5 mm (3/16")

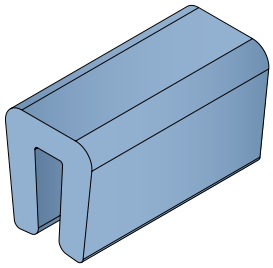

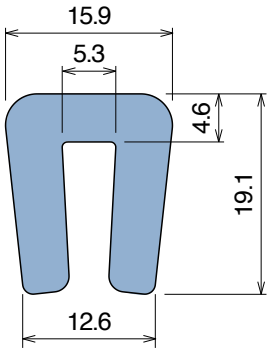

Article-Nr.	Material	Availability	Supply
15300C	BluLub	Stock item	3 m bars
15300	BluLub	On request	6 m bars
15300-30	BluLub	Stock item	30 m coils
15303C	Ti-White	Stock item	3 m bars
15303	Ti-White	On request	6 m bars
15303-30	Ti-White	Stock item	30 m coils
15305C	Blue	On request	3 m bars
15305	Blue	On request	6 m bars
15305-30	Blue	On request	30 m coils
15302C	Green	Stock item	3 m bars
15302	Green	On request	6 m bars
15302-30	Green	On request	30 m coils

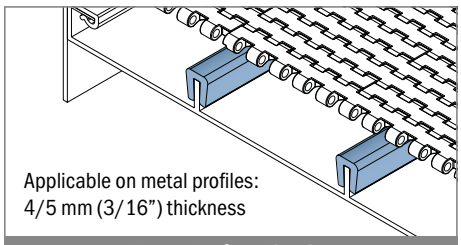

Applicable on metal profiles:
4/5 mm (3/16") thickness

Example of application

1006

Copri profilo / ***Bar cap*** / ***Abdeckprofil***

Delivery: Easy Standard — Fit on 5 mm (3/16")

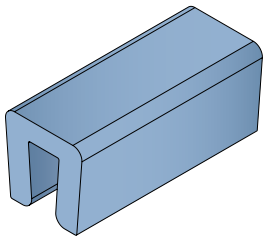

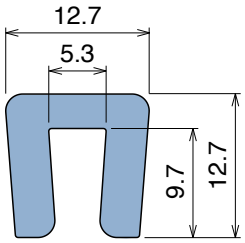

Article-Nr.	Material	Availability	Supply
100600B-30	BluLub	On request	30 m coils
100603-30	Ti-White	Stock item	30 m coils
100605-30	Blue	On request	30 m coils

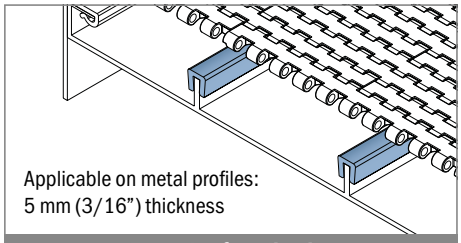

Applicable on metal profiles:
5 mm (3/16") thickness

Example of application

1007

Copri profilo / ***Bar cap*** / ***Abdeckprofil***

Delivery: Easy Standard — Fit on 5 mm (3/16")

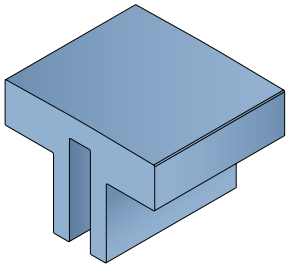

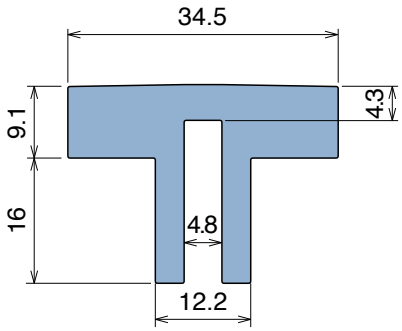

Article-Nr.	Material	Availability	Supply
100703BC	BluLub	Stock item	3 m bars
100703B	BluLub	On request	6 m bars
100703C	Ti-White	Stock item	3 m bars
100703	Ti-White	On request	6 m bars
100705C	Blue	On request	3 m bars
100705	Blue	On request	6 m bars

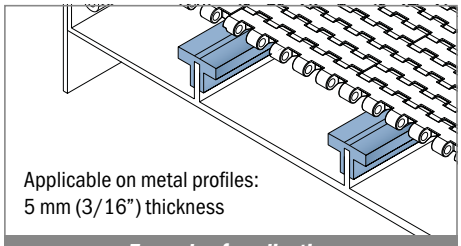

Applicable on metal profiles:
5 mm (3/16") thickness

Example of application

NEW 1095

Copri profilo / *Bar cap / Abdeckprofil*

Fit on 4 mm

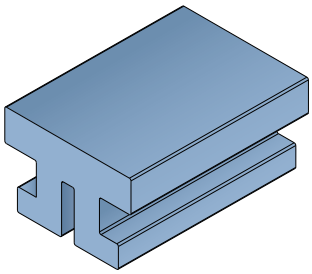

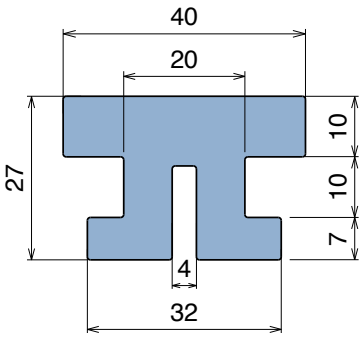

Article-Nr.	Material	Availability	Supply
109504C	BluLub	On request	3 m bars
109503C	Ti-White	On request	3 m bars
109501C	Blue	On request	3 m bars

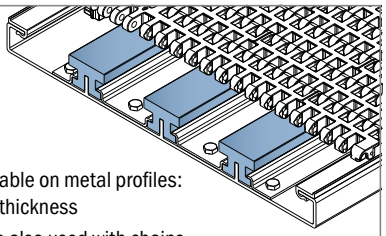

Applicable on metal profiles:
4 mm thickness
Can be also used with chains.

Example of application

1040

Copri profilo / *Bar cap / Abdeckprofil*

Delivery: Easy Standard — Fit on 3 mm (1/8")

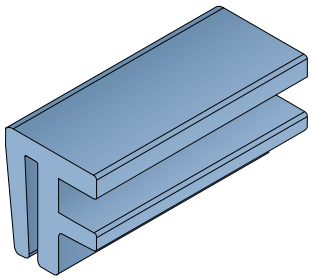

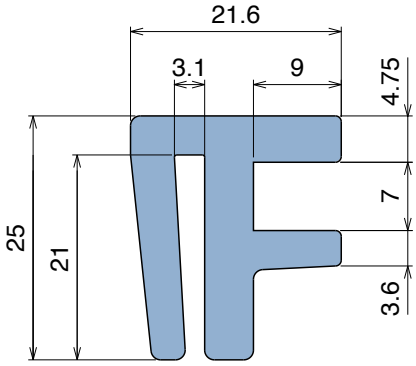

Article-Nr.	Material	Availability	Supply
104000BC	BluLub	On request	3 m bars
104000B	BluLub	On request	6 m bars
104003C	Ti-White	Stock item	3 m bars
104003	Ti-White	On request	6 m bars
104005C	Blue	On request	3 m bars
104005	Blue	On request	6 m bars

Generally used with sideflex belt.

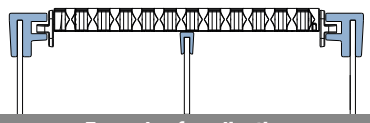

Example of application

1008

Copri profilo / *Bar cap / Abdeckprofil*

Delivery: Easy Standard — Fit on 5 mm (3/16")

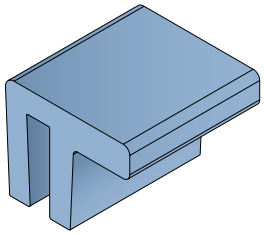

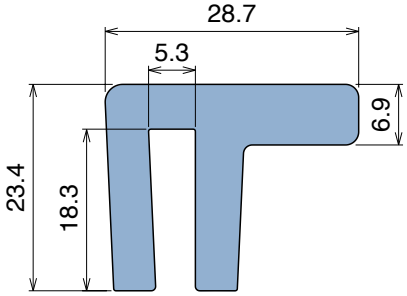

Article-Nr.	Material	Availability	Supply
100803BC	BluLub	Stock item	3 m bars
100803B	BluLub	On request	6 m bars
100803C	Ti-White	Stock item	3 m bars
100803	Ti-White	Stock item	6 m bars
100805C	Blue	On request	3 m bars
100805	Blue	On request	6 m bars

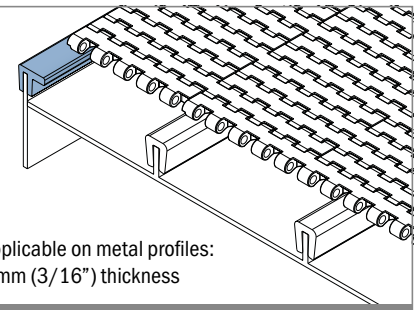

Applicable on metal profiles:
5 mm (3/16") thickness

Example of application

Oadby Core product range
Oadby Available from stock in Leicester
Easy Available from stock in Italy
Standard Produced to order in Italy

Movex

1009

Copri profilo / *Bar cap / Abdeckprofil*

Delivery: Easy | Standard — Fit on 6 mm (1/4")

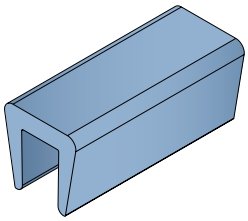

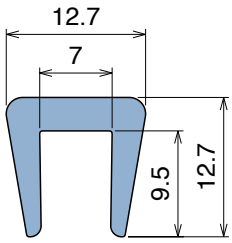

Article-Nr.	Material	Availability	Supply
100900B-30	BluLub	On request	30 m coils
100903-30	Ti-White	Stock item	30 m coils
100905-30	Blue	On request	30 m coils

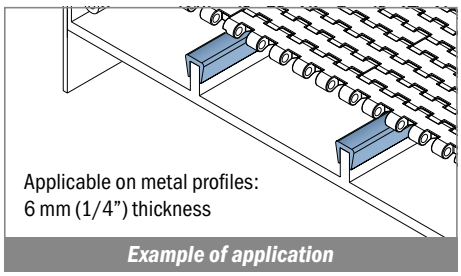

Example of application

1010

Copri profilo / *Bar cap / Abdeckprofil*

Delivery: Easy | Standard — Fit on 6 mm (1/4")

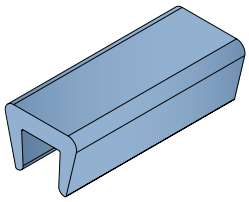

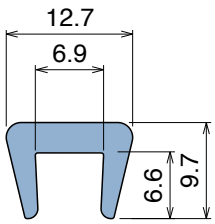

Article-Nr.	Material	Availability	Supply
101000B-30	BluLub	On request	30 m coils
101003-30	Ti-White	Stock item	30 m coils
101005-30	Blue	On request	30 m coils

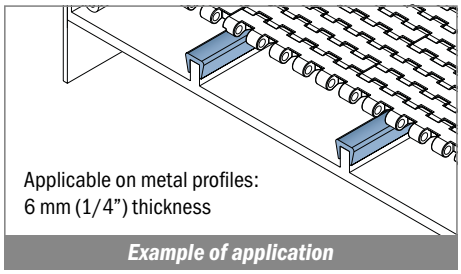

Example of application

NEW

1086

Copri profilo / *Bar cap / Abdeckprofil*

Fit on 8 mm (5/16")

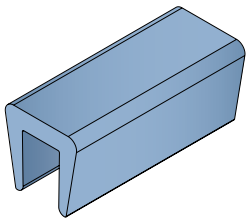

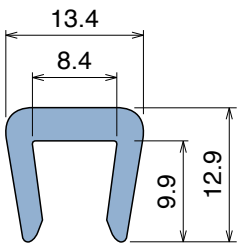

Article-Nr.	Material	Availability	Supply
108600B-30	BluLub	On request	30 m coils
108603-30	Ti-White	On request	30 m coils
108605-30	Blue	On request	30 m coils

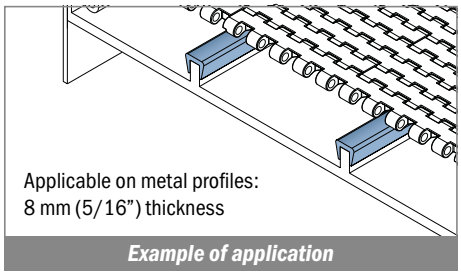

Example of application

1011

Copri profilo / *Bar cap / Abdeckprofil*

Fit on 10 mm (3/8")

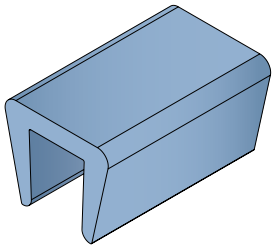

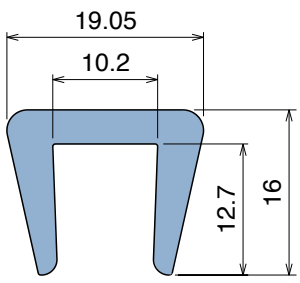

Article-Nr.	Material	Availability	Supply
101100B-30	BluLub	On request	30 m coils
101103-30	Ti-White	On request	30 m coils
101105-30	Blue	On request	30 m coils

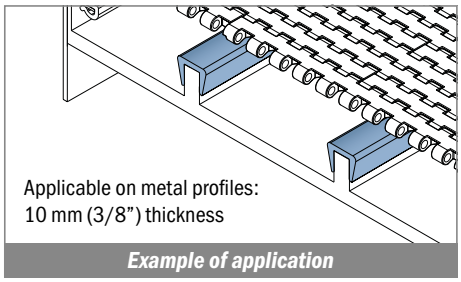

Example of application

1013

Copri profilo / *Bar cap / Abdeckprofil*

Fit on 10 mm (3/8")

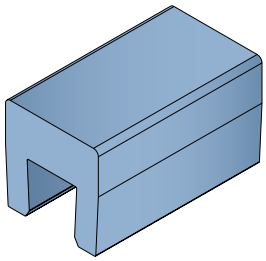

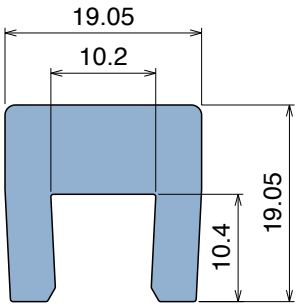

Article-Nr.	Material	Availability	Supply
101300BC	BluLub	On request	3 m bars
101300B	BluLub	On request	6 m bars
101303C	Ti-White	On request	3 m bars
101303	Ti-White	On request	6 m bars
101305C	Blue	On request	3 m bars
101305	Blue	On request	6 m bars

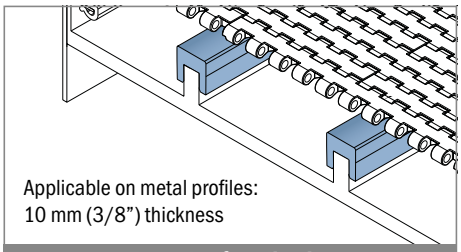

Applicable on metal profiles:
10 mm (3/8") thickness

Example of application

1012

Copri profilo / *Bar cap / Abdeckprofil*

Delivery: Easy Standard Fit on 12/13 mm (1/2")

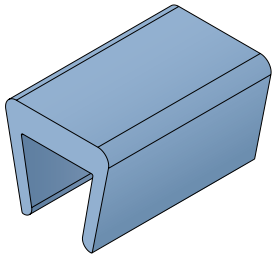

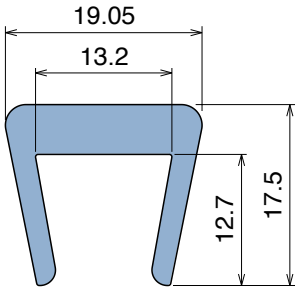

Article-Nr.	Material	Availability	Supply
101200B-30	BluLub	On request	30 m coils
101203-30	Ti-White	Stock item	30 m coils
101205-30	Blue	On request	30 m coils

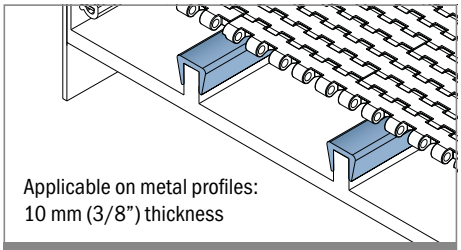

Applicable on metal profiles:
10 mm (3/8") thickness

Example of application

181

Copri profilo / *Bar cover / Abdeckprofil*

Delivery: Easy Standard Fit on 25.4 x 25.4 mm (1" x 1")

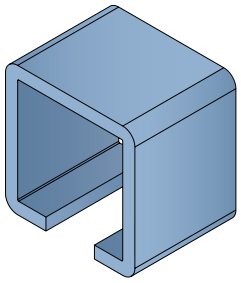

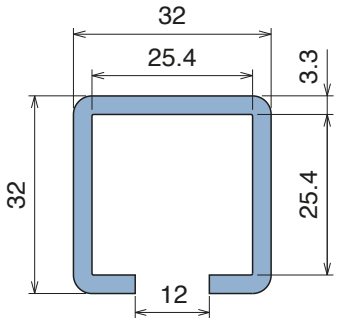

Article-Nr.	Material	Availability	Supply
18100BC	BluLub	On request	3 m bars
18100B	BluLub	On request	6 m bars
18103C	Ti-White	Stock item	3 m bars
18103	Ti-White	On request	6 m bars
18105C	Blue	On request	3 m bars
18105	Blue	On request	6 m bars

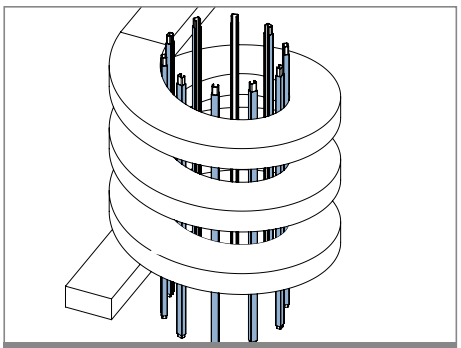

Example of application

Oadby Core product range
Oadby Available from stock in Leicester
Easy Available from stock in Italy
Standard Produced to order in Italy

Movex®

1052

Copri profilo / *Bar cover / Abdeckprofil*

Delivery: Easy Standard | Fit on 38.1 x 50.8 mm (1-1/2"x 2")

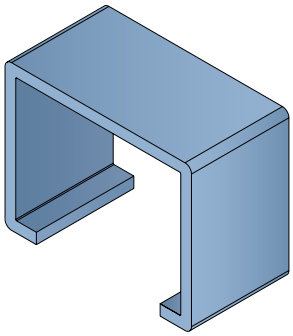

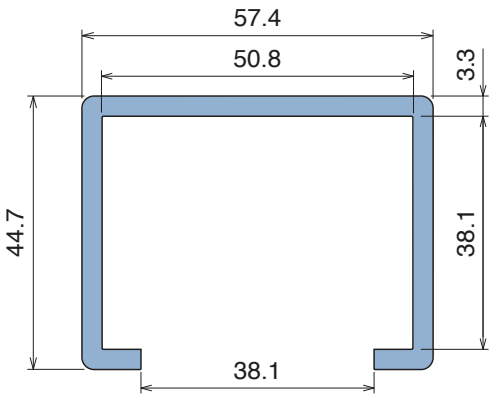

Article-Nr.	Material	Availability	Supply
105200BC	BluLub	On request	3 m bars
105200B	BluLub	On request	6 m bars
105203C	Ti-White	Stock item	3 m bars
105203	Ti-White	On request	6 m bars
105205C	Blue	On request	3 m bars
105205	Blue	On request	6 m bars

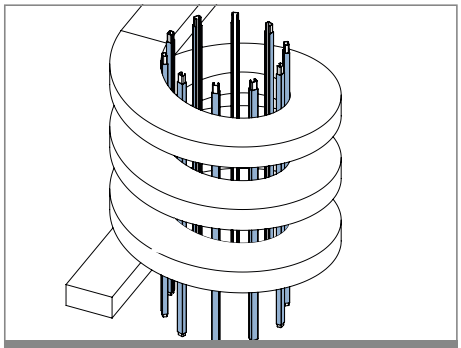

Example of application

180

Copri profilo / *Bar cover / Abdeckprofil*

Fit on 30.5 x 46 mm

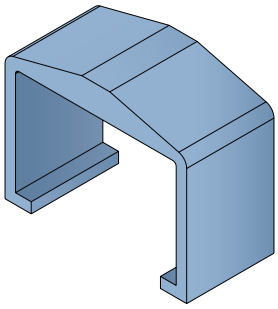

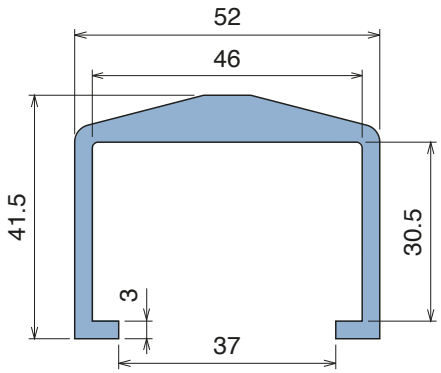

Article-Nr.	Material	Availability	Supply
18000BC	BluLub	On request	3 m bars
18000B	BluLub	On request	6 m bars
18003C	Ti-White	On request	3 m bars
18003	Ti-White	On request	6 m bars
18005C	Blue	On request	3 m bars
18005	Blue	On request	6 m bars

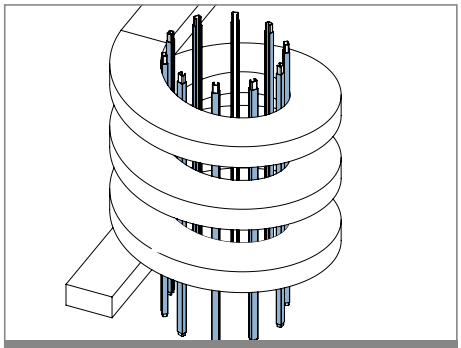

Example of application

1063

Guida laterale / *Side guide / Seitenführung*

Delivery: Easy Standard — Fit on 30 x 4 mm

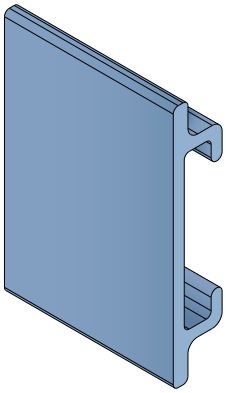

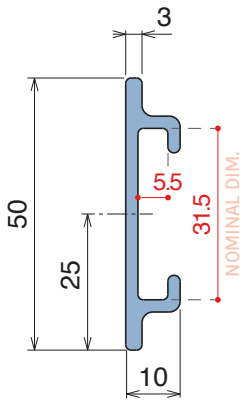

Article-Nr.	Material	Availability	Supply
106300BC	BluLub	On request	3 m bars
106301C	Black	Stock item	3 m bars
106302C	Green	Stock item	3 m bars

Plate
30 x 4 mm

Option of application - Plate

137

Guida laterale / *Side guide / Seitenführung*

Delivery: Easy Standard — Fit on 40 x 8 mm

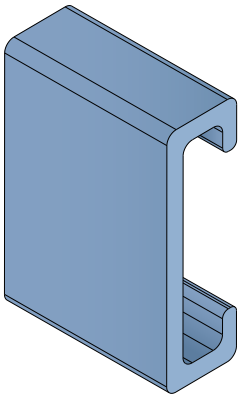

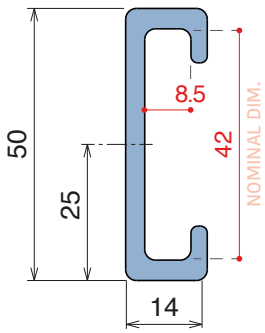

Article-Nr.	Material	Availability	Supply
13701BC	BluLub	Stock item	3 m bars
13701B	BluLub	On request	6 m bars
13703C	Ti-White	Stock item	3 m bars
13703	Ti-White	On request	6 m bars
13702C	Black	Stock item	3 m bars
13702	Black	On request	6 m bars
13705C	Blue	On request	3 m bars
13705	Blue	On request	6 m bars
13701C	Green	Stock item	3 m bars
13701	Green	Stock item	6 m bars

Plate
40 x 8 mm

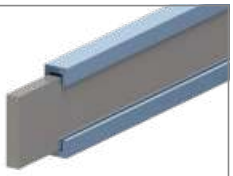

Option of application - Plate

Part 117
Pag 410

Option of application - M-Profile

Part 1055
Pag 410

Option of application - Guide

Oadby Core product range
Oadby Available from stock in Leicester
Easy Available from stock in Italy
Standard Produced to order in Italy
Movex

137

Guida laterale / *Side guide / Seitenführung*

Delivery: **Easy** **Standard** Fit on 40 x 10 mm

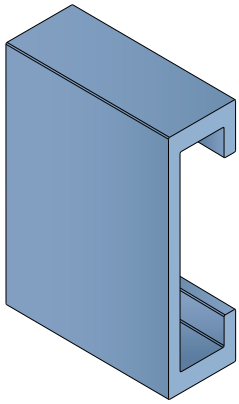

Article-Nr.	Material	Availability	Supply
13711BC	BluLub	Stock item	3 m bars
13711B	BluLub	On request	6 m bars
13713C	Ti-White	On request	3 m bars
13713	Ti-White	On request	6 m bars
13712C	Black	On request	3 m bars
13712	Black	On request	6 m bars
13715C	Blue	On request	3 m bars
13715	Blue	On request	6 m bars
13711C	Green	Stock item	3 m bars
13711	Green	Stock item	6 m bars

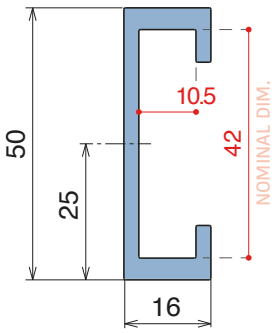

Plate
40 x 10 mm

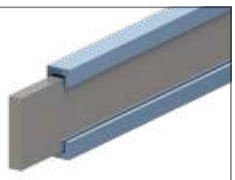

Option of application - Plate

Part 117
Pag 410

Option of application - M-Profile

158

Guida laterale / *Side guide / Seitenführung*

Delivery: **Easy** **Standard** Fit on 40 x 10 mm

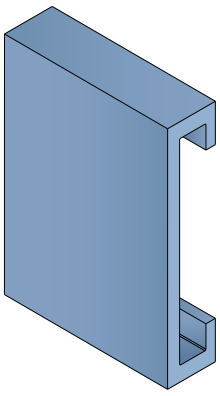

Article-Nr.	Material	Availability	Supply
15800BC	BluLub	Stock item	3 m bars
15894C	Ti-White	On request	3 m bars
15898C	Black	Stock item	3 m bars
15894BLC	Blue	On request	3 m bars
15897C	Green	Stock item	3 m bars
15800C	Grey	Stock item	3 m bars

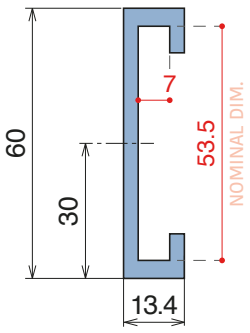

Plate
40 x 10 mm

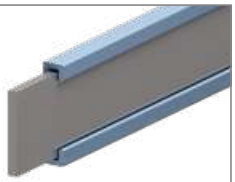

Option of application - Plate

Part 159
Pag 410

Option of application - Guide

1064

Guida laterale / *Side guide / Seitenführung*

Delivery: Easy | Standard — Fit on 55 x 4 mm

Article-Nr.	Material	Availability	Supply
106400BC	BluLub	On request	3 m bars
106403C	Ti-White	On request	3 m bars
106401C	Black	Stock item	3 m bars
106405C	Blue	On request	3 m bars

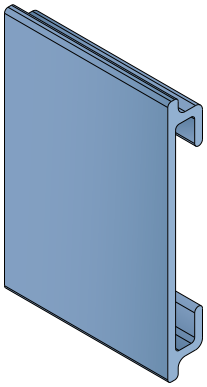

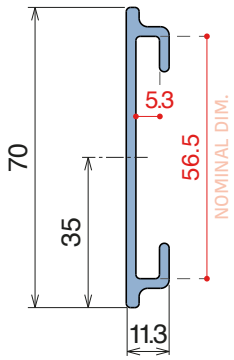

Plate
55 x 4 mm

Option of application - Plate

183

Guida laterale / *Side guide / Seitenführung*

Delivery: Easy | Standard — Fit on 40 x 8 mm

Article-Nr.	Material	Availability	Supply
18301BC	BluLub	Stock item	3 m bars
18301C	Black	Stock item	3 m bars
18305C	Blue	On request	3 m bars
18397C	Green	Stock item	3 m bars

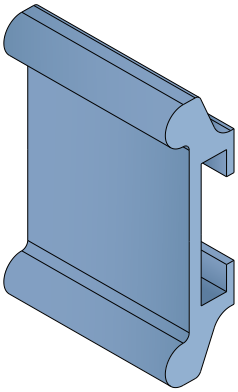

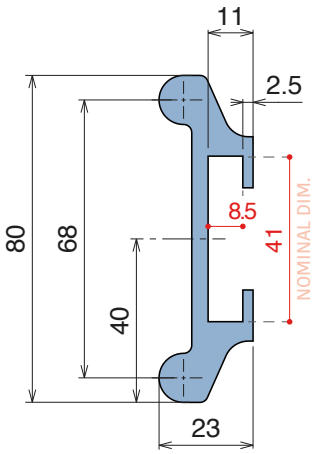

Plate
40 x 8 mm

Option of application - Plate

Part 117
Pag 410

Option of application - M-Profile

Part 1055
Pag 410

Option of application - Guide

Oadby Core product range
Oadby Available from stock in Leicester
Easy Available from stock in Italy
Standard Produced to order in Italy

Movex

NEW

158

Guida laterale / *Side guide* / *Seitenführung*

Delivery: Easy Standard Fit on 50 x 6 mm

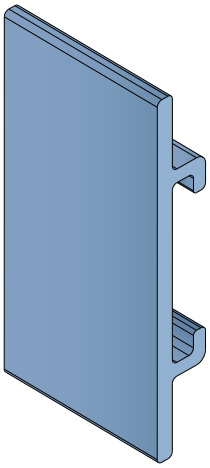

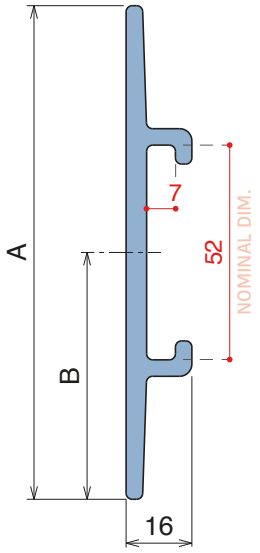

Article-Nr.	A	B	Material	Availability	Supply
15801BC	90	45	BluLub	Stock item	3 m bars
15802BC	100	50	BluLub	Stock item	3 m bars
15803BC	120	60	BluLub	Stock item	3 m bars
15804BC	140	70	BluLub	On request	3 m bars
15831C	90	45	Ti-White	On request	3 m bars
15832C	100	50	Ti-White	On request	3 m bars
15833C	120	60	Ti-White	On request	3 m bars
15834C	140	70	Ti-White	On request	3 m bars
15801BLC	90	45	Blue	On request	3 m bars
15802BLC	100	50	Blue	On request	3 m bars
15803BLC	120	60	Blue	On request	3 m bars
15804BLC	140	70	Blue	On request	3 m bars
15801C	90	45	Grey	Stock item	3 m bars
15802C	100	50	Grey	Stock item	3 m bars
15803C	120	60	Grey	Stock item	3 m bars
15804C	140	70	Grey	On request	3 m bars

Plate
50 x 6 mm

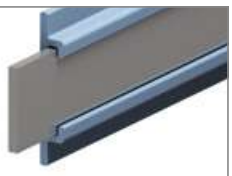

Option of application - Plate

Part 159
Pag 410

Option of application - Guide

NEW

194

Guida laterale con salva etichetta / *Side guide with lable saver* / *Seitenführung mit Etikettenschutz*

Delivery: Easy Standard Fit on 50 x 6 mm

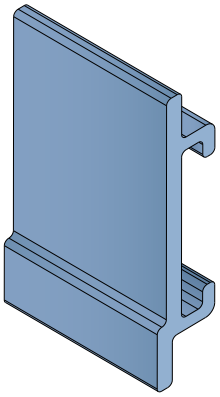

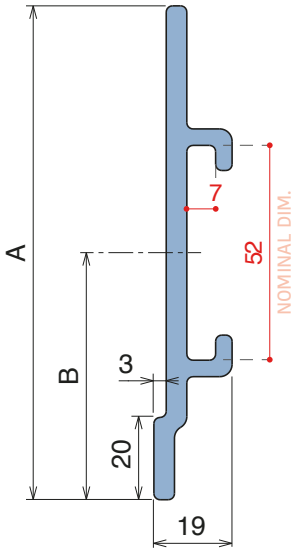

Article-Nr.	A	B	Material	Availability	Supply
19400BC	90	45	BluLub	Stock item	3 m bars
19403BC	120	60	BluLub	Stock item	3 m bars
19430C	90	45	Ti-White	On request	3 m bars
19433C	120	60	Ti-White	On request	3 m bars
19400BLC	90	45	Blue	On request	3 m bars
19403BLC	120	60	Blue	On request	3 m bars
19400C	90	45	Grey	On request	3 m bars
19403C	120	60	Grey	On request	3 m bars

Plate
50 x 6 mm

Option of application - Plate

Part 159
Pag 410

Option of application - Guide

189 Guida laterale / *Side guide / Seitenführung*

Delivery: **Easy** **Standard** Fit on 40 x 8 mm

Article-Nr.	Material	Availability	Supply
18912BC	BluLub	Stock item	3 m bars
18912BLC	Blue	On request	3 m bars
18916C	Grey	On request	3 m bars

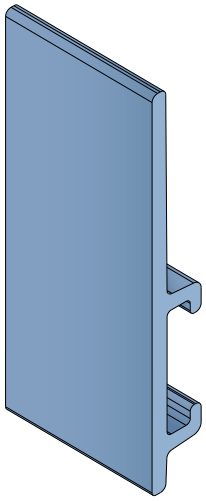

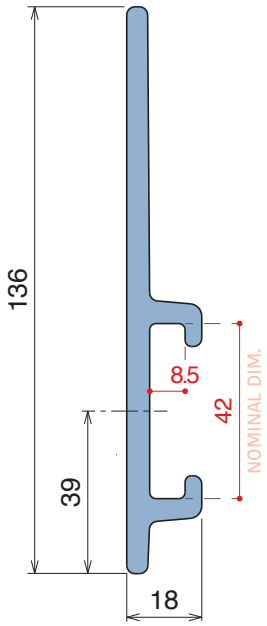

Plate
40 x 8 mm

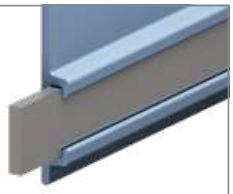

Option of application - Plate

Part 117
Pag 410

Option of application - M-Profile

Part 1055
Pag 410

Option of application - Guide

Guida laterale con salva etichetta
Side guide with lable saver / Seitenführung mit Etikettenschutz

Article-Nr.	Material	Availability	Supply
18910BC	BluLub	Stock item	3 m bars
18910BLC	Blue	On request	3 m bars
18914C	Grey	Stock item	3 m bars

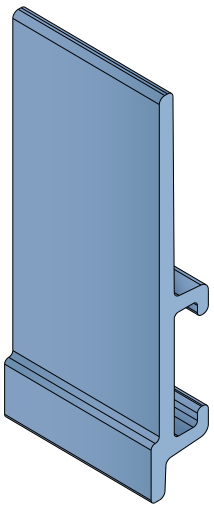

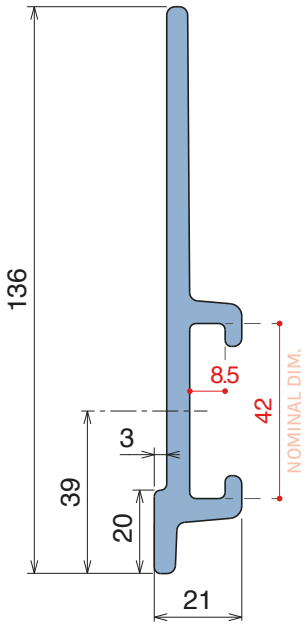

Easy Bendable
For the grooved version, just add "**-S**" to the related Article Nr.

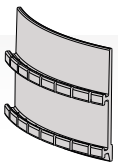

Plate
40 x 8 mm

Option of application - Plate

Part 117
Pag 410

Option of application - M-Profile

Part 1055
Pag 410

Option of application - Guide

Oadby Core product range
Oadby Available from stock in Leicester
Easy Available from stock in Italy
Standard Produced to order in Italy

Movex

Guida laterale con salva etichetta
Side guide with lable saver / Seitenführung mit Etikettenschutz

Article-Nr.	Material	Availability	Supply
18911BC	BluLub	Stock item	3 m bars
18911BLC	Blue	On request	3 m bars
18915C	Grey	On request	3 m bars

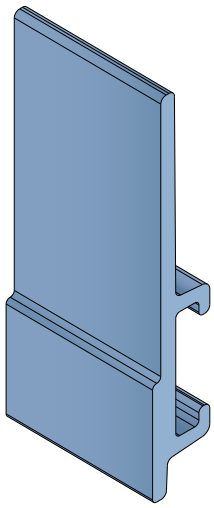

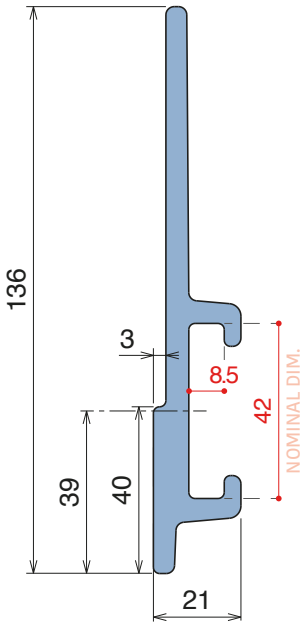

Plate
40 x 8 mm

Valid also for ***RS*** *versions*

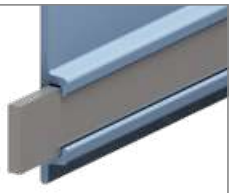

Option of application - Plate

Part 117
Pag 410

Valid also for ***RS*** *versions*

Option of application - M-Profile

Part 1055
Pag 410

Valid also for ***RS*** *versions*

Option of application - Guide

NEW

1079

RS **Guida laterale con salva etichetta** / ***Side guide with lable saver / Seitenführung mit Etikettenschutz***

Delivery: **Easy** **Standard** Fit on 40 x 8 mm

Article-Nr.	Version	Material	Availability	Supply
107900	A	Black+BluLub	On request	3 m bars
107901	B	Black+BluLub	On request	3 m bars

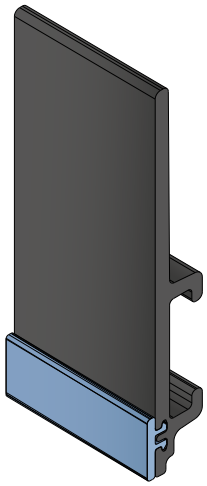

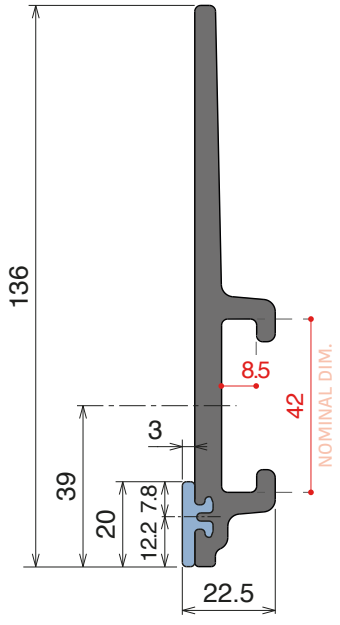

VERSION **A** - Label saver 2 cm

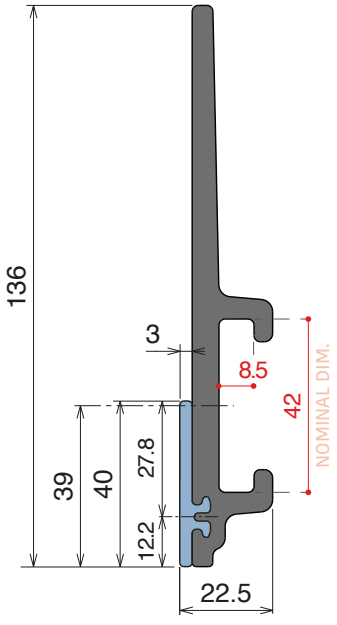

VERSION **B** - Label saver 4 cm

Base profile

Art-Nr.	Supply
18980	3 m bars

Label saver *2 cm*

Art-Nr.	Supply
18987	30 m coils

Label saver *4 cm*

Art-Nr.	Supply
18988	30 m coils

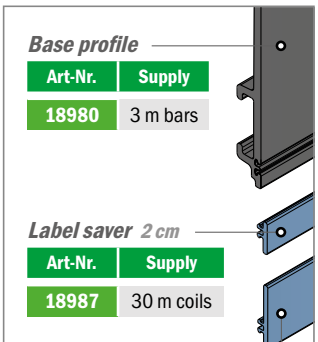

Single components

Easy Bendable
For the grooved version, just add "**-S**" to the related Article Nr.

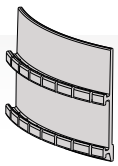

189 Guida laterale / *Side guide / Seitenführung*

Delivery: **Easy** **Standard** Fit on 50 x 6 mm

Article-Nr.	Material	Availability	Supply
18902BC	BluLub	Stock item	3 m bars
18902BLC	Blue	On request	3 m bars
18906C	Grey	On request	3 m bars

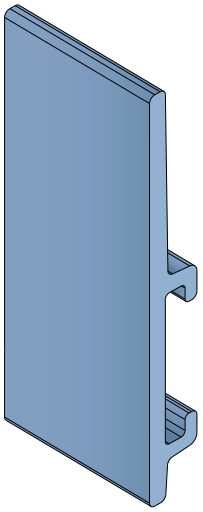

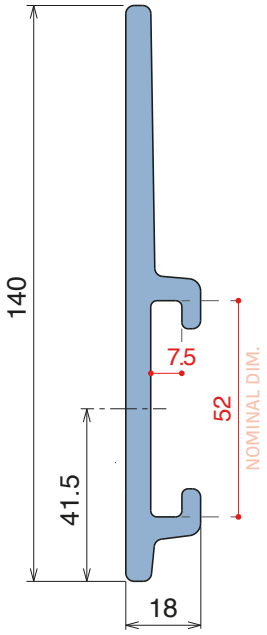

Plate
50 x 6 mm

Option of application - Plate

Part 159
Pag 410

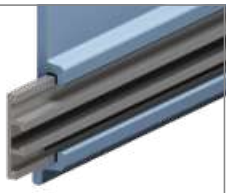

Option of application - Guide

Guida laterale con salva etichetta
Side guide with lable saver / Seitenführung mit Etikettenschutz

Article-Nr.	Material	Availability	Supply
18900BC	BluLub	Stock item	3 m bars
18900BLC	Blue	On request	3 m bars
18904C	Grey	Stock item	3 m bars

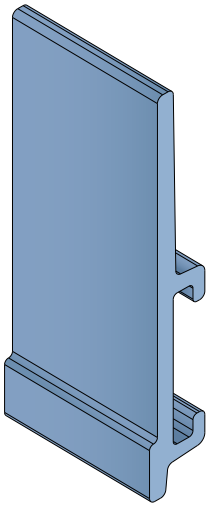

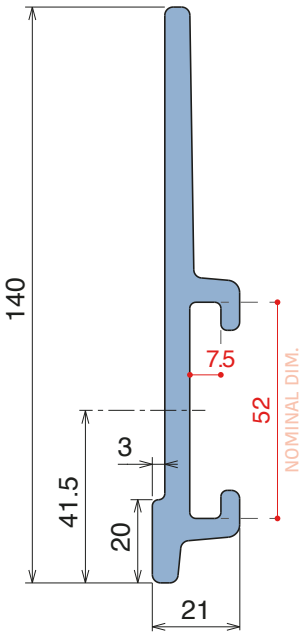

Plate
50 x 6 mm

Option of application - Plate

Part 159
Pag 410

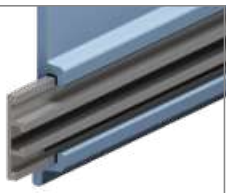

Option of application - Guide

Easy Bendable
For the grooved version, just add "**-S**" to the related Article Nr.

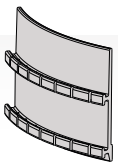

Oadby Core product range
Oadby Available from stock in Leicester
Easy Available from stock in Italy
Standard Produced to order in Italy

Movex

Guida laterale con salva etichetta
Side guide with lable saver / Seitenführung mit Etikettenschutz

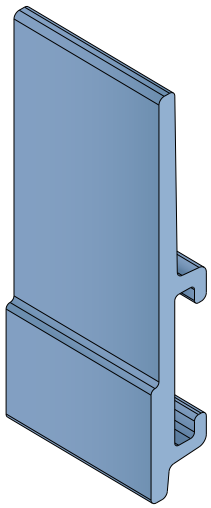

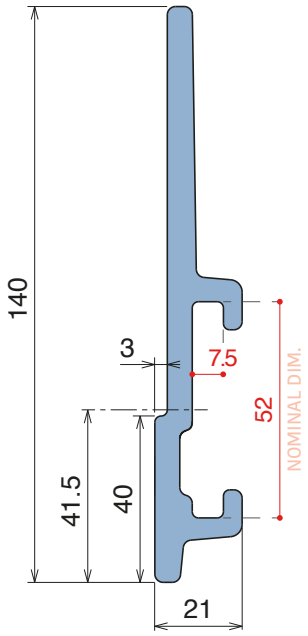

Article-Nr.	Material	Availability	Supply
18901BC	BluLub	Stock item	3 m bars
18901BLC	Blue	On request	3 m bars
18905C	Grey	On request	3 m bars

Plate
50 x 6 mm

Option of application - Plate

Part 159
Pag 410

Option of application - Guide

NEW

1096

Guida laterale con salva etichetta / *Side guide with lable saver / Seitenführung mit Etikettenschutz*

Delivery: Easy Standard Fit on 50 x 5 mm

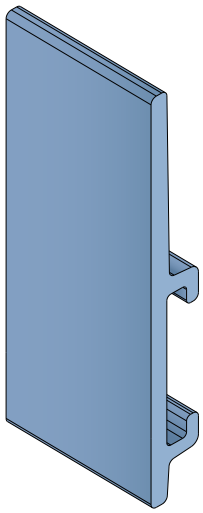

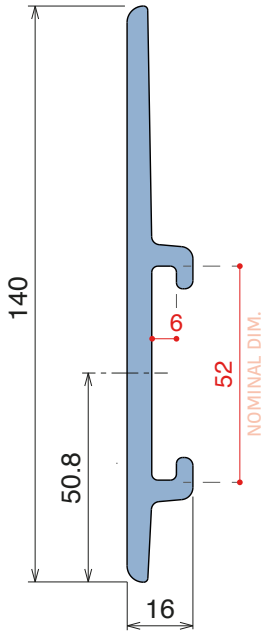

Article-Nr.	Material	Availability	Supply
109600BC	BluLub	Stock item	3 m bars
109600BLC	Blue	On request	3 m bars
109605C	Grey	On request	3 m bars

Plate
50 x 5 mm

Option of application - Plate

Easy Bendable
For the grooved version, just add "**-S**" to the related Article Nr.

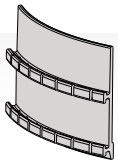

135

Guida laterale / *Side guide / Seitenführung*

Delivery: Easy Standard Fit on 60 x 6 mm

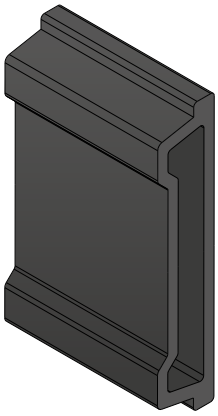

Article-Nr.	Material	Availability	Supply
13501C	Black	Stock item	3 m bars
13501	Black	Stock item	6 m bars
13502C	Blue RAL 5012	Stock item	3 m bars
13502	Blue RAL 5012	Stock item	6 m bars

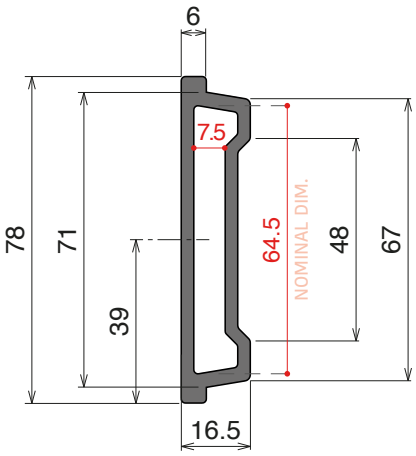

Plate
60 x 6 mm

Part 3310
pag 477

Option of application - Plate

136

Guida laterale / *Side guide / Seitenführung*

Delivery: Easy Standard Fit on 60 x 6 mm

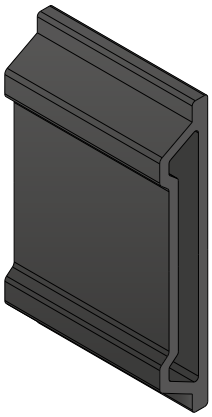

Article-Nr.	Material	Availability	Supply
13601C	Black	Stock item	3 m bars
13601	Black	On request	6 m bars
13602C	Blue RAL 5012	Stock item	3 m bars
13602	Blue RAL 5012	Stock item	6 m bars

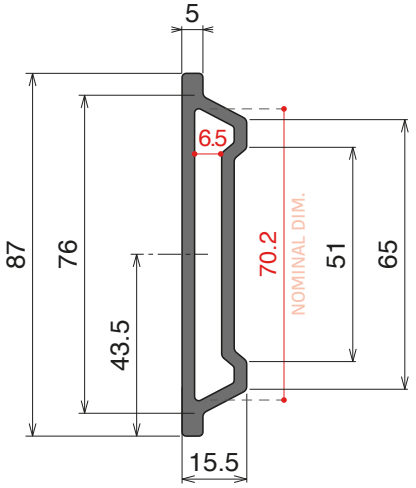

Plate
60 x 6 mm

Part 345
pag 477

Option of application - Plate

Oadby Core product range
Oadby Available from stock in Leicester
Easy Available from stock in Italy
Standard Produced to order in Italy
Movex

1057/1077

Guida laterale / *Side guide / Seitenführung*

Delivery: **Easy** **Standard** Fit on 50 x 6 mm

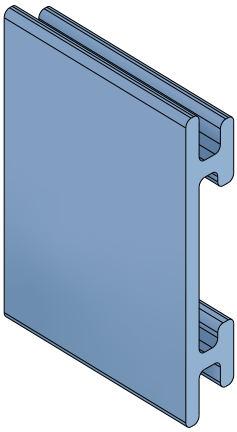

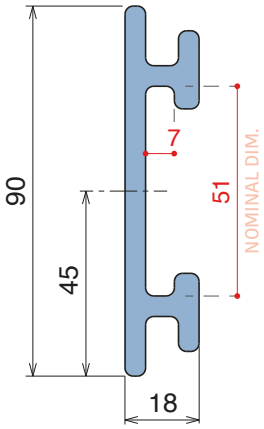

Article-Nr.	Material	Availability	Supply
105720BLC	BluLub	Stock item	3 m bars
105721C	Black	On request	3 m bars
105725C	Blue	On request	3 m bars
105724C	Grey	On request	3 m bars

Plate
50 x 6 mm

Valid also for ***RS*** *versions*

Option of application - Plate

Part 159
Pag 410

Valid also for ***RS*** *versions*

Part 3311
pag 477

Option of application - Guide

Guida laterale con salva etichetta
Side guide with lable saver / Seitenführung mit Etikettenschutz

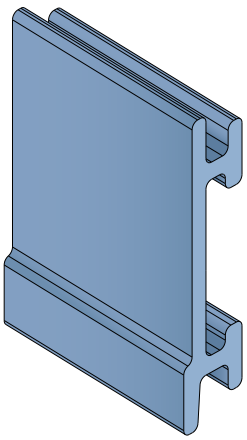

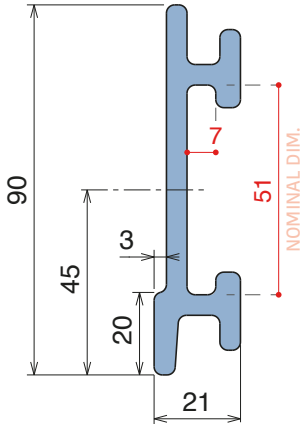

Article-Nr.	Material	Availability	Supply
107720BLC	BluLub	Stock item	3 m bars
107721C	Black	On request	3 m bars
107725C	Blue	On request	3 m bars
107724C	Grey	On request	3 m bars

Plate
50 x 6 mm

Valid also for ***RS*** *versions*

Option of application - Plate

Part 159
Pag 410

Valid also for ***RS*** *versions*

Part 3311
pag 477

Option of application - Guide

Easy Bendable
For the grooved version, just add "**-S**" to the related Article Nr.

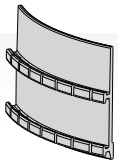

NEW 1077/1078

RS Guida laterale con salva etichetta / *Side guide with lable saver / Seitenführung mit Etikettenschutz*

Delivery: Easy Standard Fit on 50 x 6 mm

Article-Nr.	Version	Material	Availability	Supply
107722	A	Black+BluLub	On request	3 m bars
107723	B	Black+BluLub	On request	3 m bars

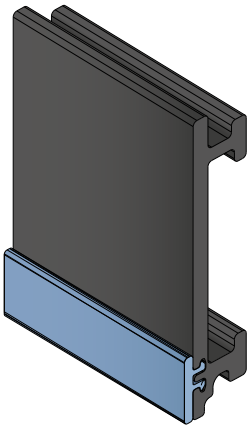

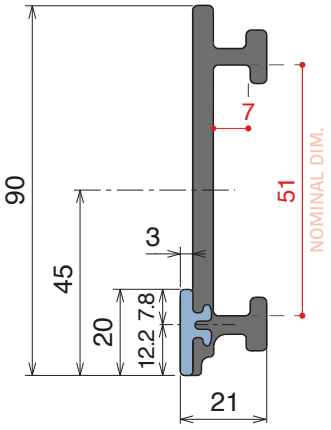

VERSION **A** - Label saver 2 cm

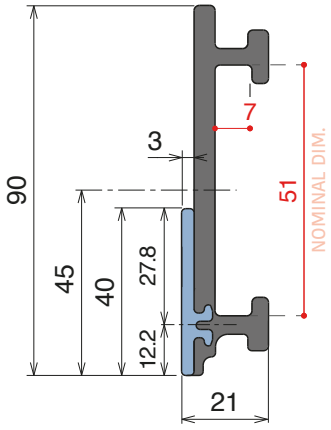

VERSION **B** - Label saver 4 cm

Base profile

Art-Nr.	Supply
107790	3 m bars

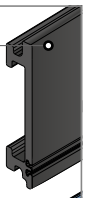

Label saver 2 cm

Art-Nr.	Supply
18987	30 m coils

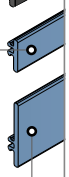

Label saver 4 cm

Art-Nr.	Supply
18988	30 m coils

Single components

Guida laterale con salva etichetta
Side guide with lable saver / Seitenführung mit Etikettenschutz

Article-Nr.	Version	Material	Availability	Supply
107822	A	Black+BluLub	On request	3 m bars
107823	B	Black+BluLub	On request	3 m bars

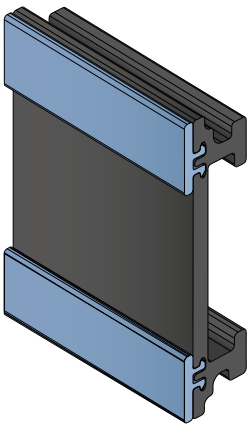

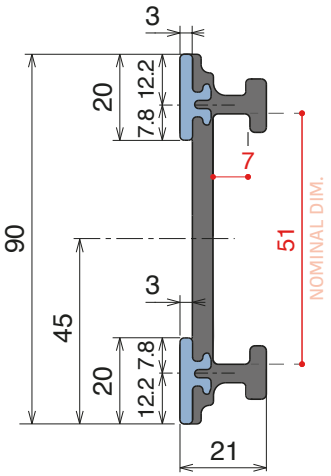

VERSION **A** - Label saver 2 cm

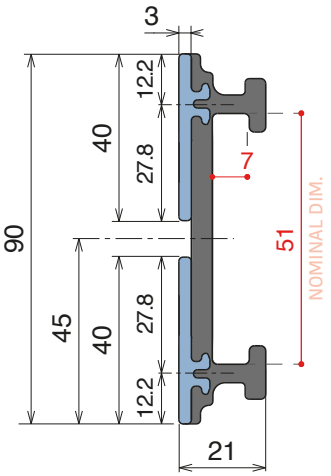

VERSION **B** - Label saver 4 cm

Base profile

Art-Nr.	Supply
107890	3 m bars

Label saver 2 cm

Art-Nr.	Supply
18987	30 m coils

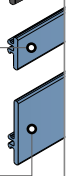

Label saver 4 cm

Art-Nr.	Supply
18988	30 m coils

Label saver 2 cm and 4 cm can also be combined together to obtain different version.

Single components

Easy Bendable

For the grooved version, just add "**-S**" to the related Article Nr.

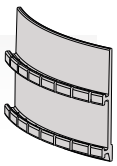

Oadby Core product range
Oadby Available from stock in Leicester
Easy Available from stock in Italy
Standard Produced to order in Italy

Movex

1057/1077

Guida laterale / *Side guide* / *Seitenführung*

Delivery: **Easy** **Standard** Fit on 60 x 6 mm

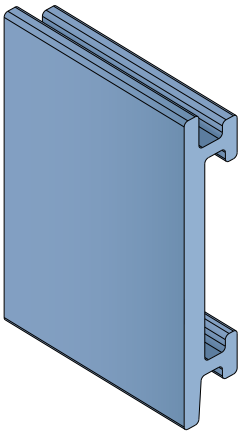

Article-Nr.	Material	Availability	Supply
105700BC	BluLub	Stock item	3 m bars
105711C	Black	Stock item	3 m bars
105705C	Blue	On request	3 m bars
105704C	Grey	Stock item	3 m bars

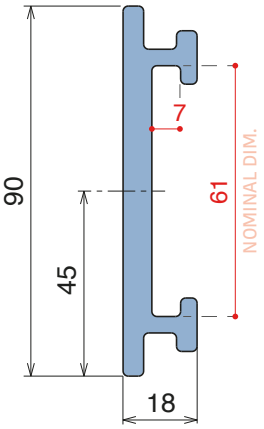

Plate
60 x 6 mm

Valid also for ***RS*** *versions*

Option of application - Plate

Part 1089
Pag 410

Valid also for ***RS*** *versions*

Part 3311
pag 477

Option of application - Guide

Guida laterale con salva etichetta
Side guide with lable saver / *Seitenführung mit Etikettenschutz*

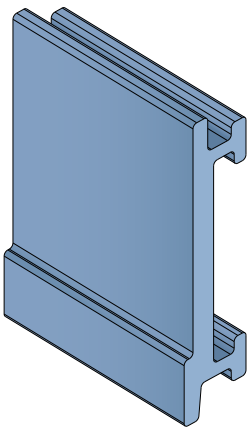

Article-Nr.	Material	Availability	Supply
107700BC	BluLub	On request	3 m bars
107711C	Black	On request	3 m bars
107705C	Blue	On request	3 m bars
107704C	Grey	On request	3 m bars

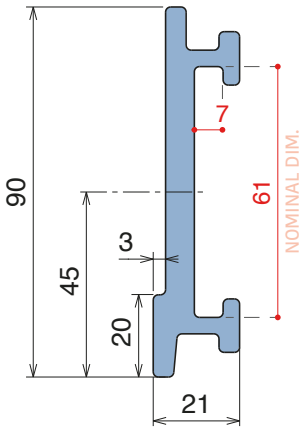

Plate
60 x 6 mm

Valid also for ***RS*** *versions*

Option of application - Plate

Part 1089
Pag 410

Valid also for ***RS*** *versions*

Part 3311
pag 477

Option of application - Guide

Easy Bendable
For the grooved version, just add "**-S**" to the related Article Nr.

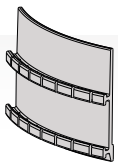

NEW 1077/1078

RS Guida laterale con salva etichetta / *Side guide with lable saver / Seitenführung mit Etikettenschutz*

Delivery: Easy | Standard | Fit on 60 x 6 mm

Article-Nr.	Version	Material	Availability	Supply
107700	A	Black+BluLub	On request	3 m bars
107701	B	Black+BluLub	On request	3 m bars

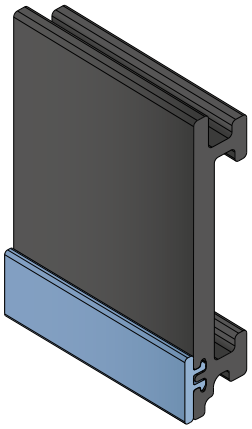

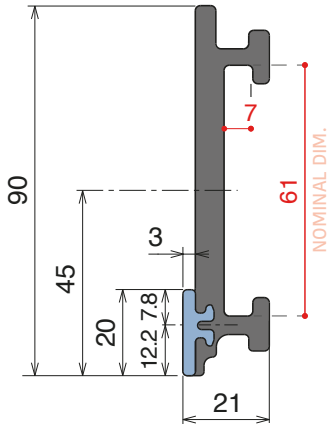

VERSION **A** - Label saver 2 cm

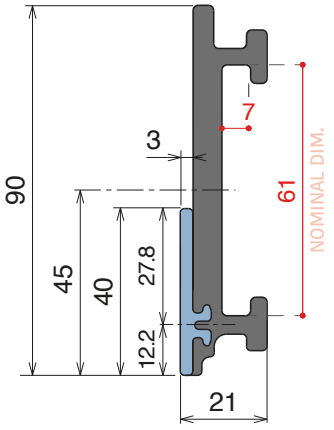

VERSION **B** - Label saver 4 cm

Base profile

Art-Nr.	Supply
107791	3 m bars

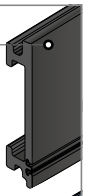

Label saver 2 cm

Art-Nr.	Supply
18987	30 m coils

Label saver 4 cm

Art-Nr.	Supply
18988	30 m coils

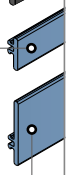

Single components

Guida laterale con salva etichetta
Side guide with lable saver / Seitenführung mit Etikettenschutz

Article-Nr.	Version	Material	Availability	Supply
107800	A	Black+BluLub	On request	3 m bars
107801	B	Black+BluLub	On request	3 m bars

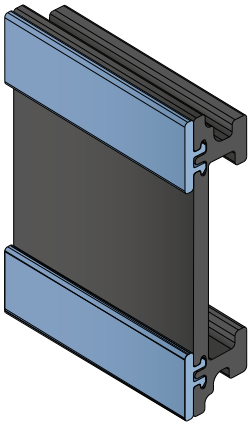

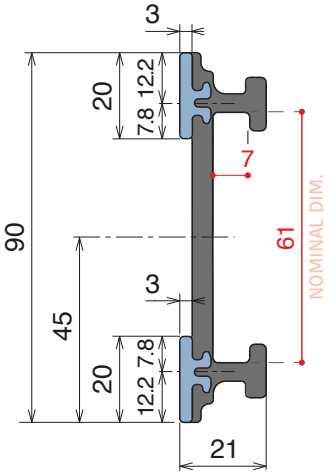

VERSION **A** - Label saver 2 cm

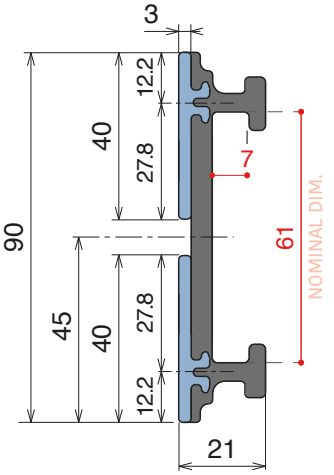

VERSION **B** - Label saver 4 cm

Base profile

Art-Nr.	Supply
107891	3 m bars

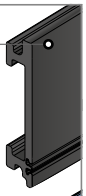

Label saver 2 cm

Art-Nr.	Supply
18987	30 m coils

Label saver 4 cm

Art-Nr.	Supply
18988	30 m coils

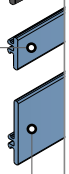

Label saver 2 cm and 4 cm can also be combined together to obtain different version.

Single components

Easy Bendable
For the grooved version, just add "**-S**" to the related Article Nr.

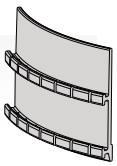

Oadby Core product range
Oadby Available from stock in Leicester | Easy Available from stock in Italy | Standard Produced to order in Italy

193/189

Guida laterale / *Side guide* / *Seitenführung*

Delivery: Easy Standard Fit on 60 x 5 mm

Article-Nr.	Material	Availability	Supply
19330BC	BluLub	Stock item	3 m bars
19335C	Blue	On request	3 m bars
19334C	Grey	On request	3 m bars

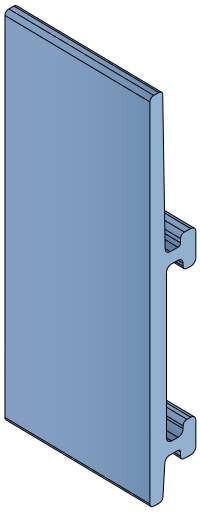

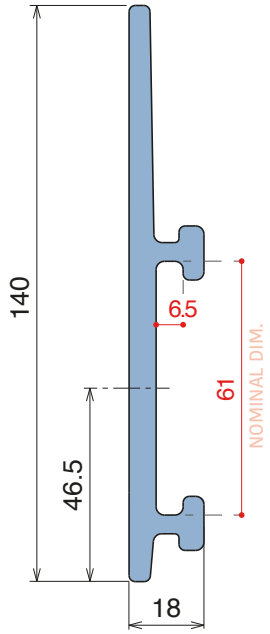

Plate
60 x 5 mm

Part 3311
pag 477

Option of application - Plate

Part 1088
Pag 410

Part 3311
pag 477

Option of application - Guide

Guida laterale con salva etichetta
Side guide with lable saver / *Seitenführung mit Etikettenschutz*

Article-Nr.	Material	Availability	Supply
18980BC	BluLub	Stock item	3 m bars
18985C	Blue	On request	3 m bars
18984C	Grey	On request	3 m bars

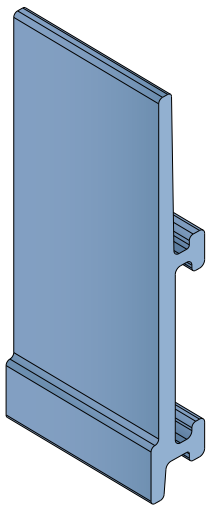

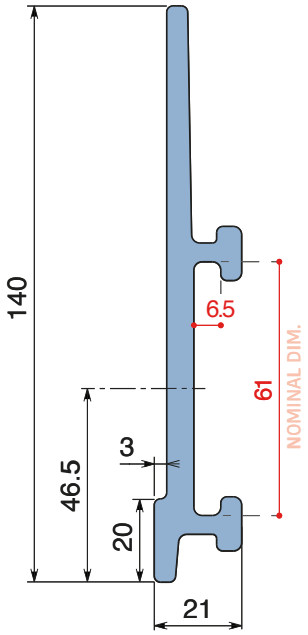

Plate
60 x 5 mm

Part 3311
pag 477

Option of application - Plate

Part 1088
Pag 410

Part 3311
pag 477

Option of application - Guide

Easy Bendable
For the grooved version, just add "**-S**" to the related Article Nr.

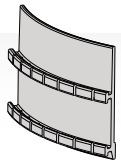

Guida laterale con salva etichetta
Side guide with lable saver / Seitenführung mit Etikettenschutz

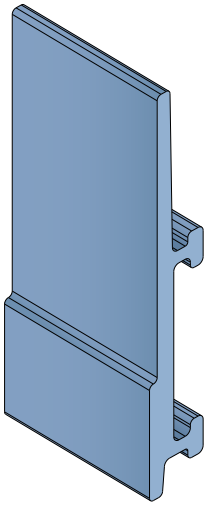

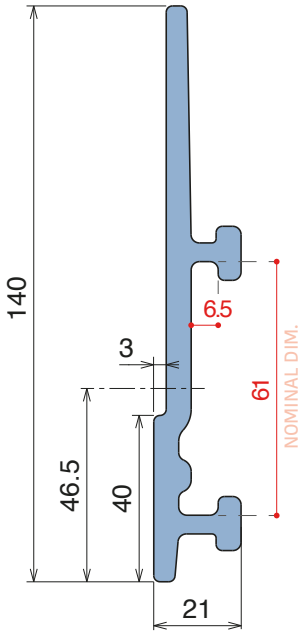

Article-Nr.	Material	Availability	Supply
18940BC	BluLub	Stock item	3 m bars
18945C	Blue	On request	3 m bars
18944C	Grey	Stock item	3 m bars

Plate
60 x 5 mm

Valid also for ***RS*** *versions*

Part 3311
pag 477

Option of application - Plate

Part 1088
Pag 410

Valid also for ***RS*** *versions*

Part 3311
pag 477

Option of application - Guide

Easy Bendable
For the grooved version, just add "**-S**" to the related Article Nr.

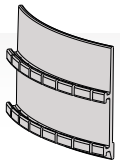

Oadby Core product range
Oadby Available from stock in Leicester
Easy Available from stock in Italy
Standard Produced to order in Italy

Movex®

193

Guida laterale / *Side guide* / *Seitenführung*

Delivery: **Easy** **Standard** Fit on 60 x 6 mm

Article-Nr.	Material	Availability	Supply
19320BC	BluLub	Stock item	3 m bars
19325C	Blue	On request	3 m bars
19324C	Grey	Stock item	3 m bars

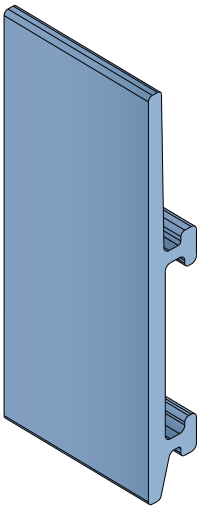

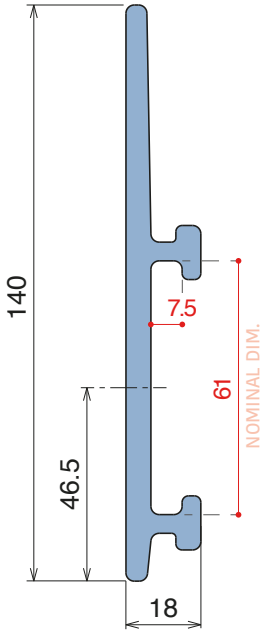

Plate
60 x 6 mm

Part 3311
pag 477

Option of application - Plate

Part 1089
Pag 410

Part 3311
pag 477

Option of application - Guide

189

Guida laterale con salva etichetta / *Side guide with lable saver* / *Seitenführung mit Etikettenschutz*

Delivery: **Easy** **Standard** Fit on 60 x 6 mm

Article-Nr.	Material	Availability	Supply
18920BC	BluLub	Stock item	3 m bars
18925C	Blue	On request	3 m bars
18924C	Grey	Stock item	3 m bars

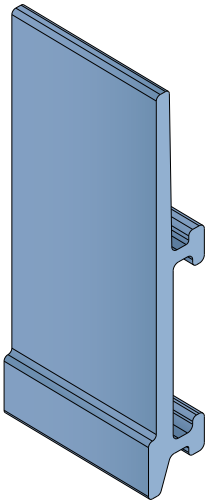

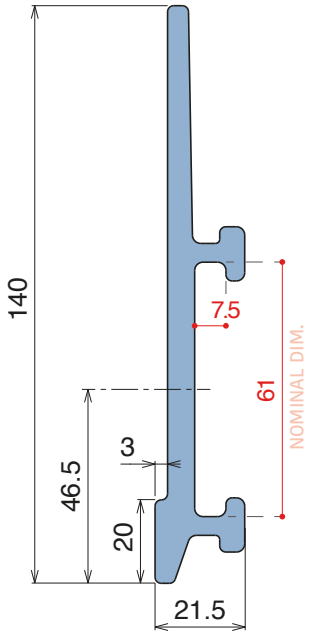

Plate
60 x 6 mm

Valid also for ***RS*** *versions*

Part 3311
pag 477

Option of application - Plate

Part 1089
Pag 410

Valid also for ***RS*** *versions*

Part 3311
pag 477

Option of application - Guide

Easy Bendable
For the grooved version, just add "**-S**" to the related Article Nr.

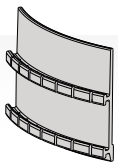

Guida laterale con salva etichetta
Side guide with lable saver / Seitenführung mit Etikettenschutz

Article-Nr.	Material	Availability	Supply
18930BC	BluLub	Stock item	3 m bars
18935C	Blue	On request	3 m bars
18934C	Grey	Stock item	3 m bars

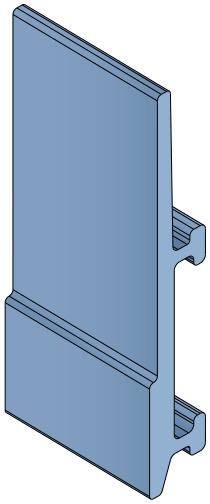

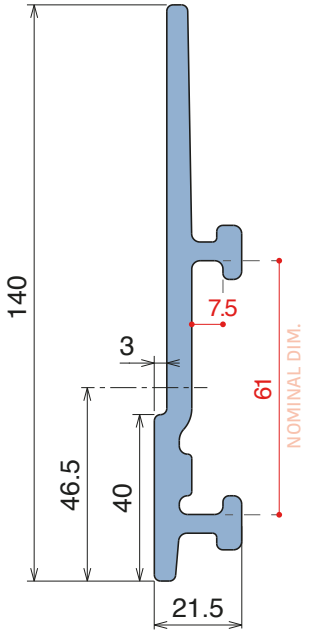

Plate
60 x 6 mm

Valid also for ***RS*** *versions*

Part 3311
pag 477

Option of application - Plate

Part 1089
Pag 410

Valid also for ***RS*** *versions*

Part 3311
pag 477

Option of application - Guide

NEW **1075**

RS Guida laterale con salva etichetta / *Side guide with lable saver / Seitenführung mit Etikettenschutz*

Delivery: **Easy** **Standard** Fit on 60 x 6 mm

Article-Nr.	Version	Material	Availability	Supply
107500	A	Black+BluLub	On request	3 m bars
107501	B	Black+BluLub	On request	3 m bars

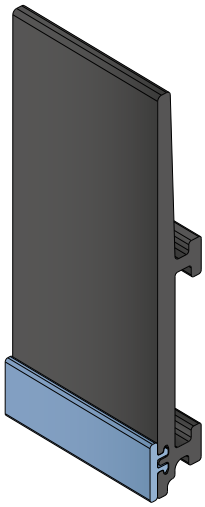

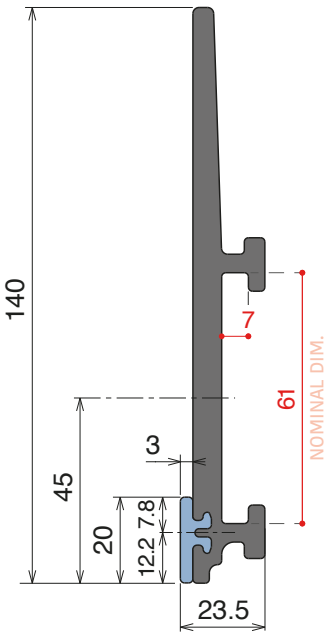

VERSION **A** - Label saver 2 cm

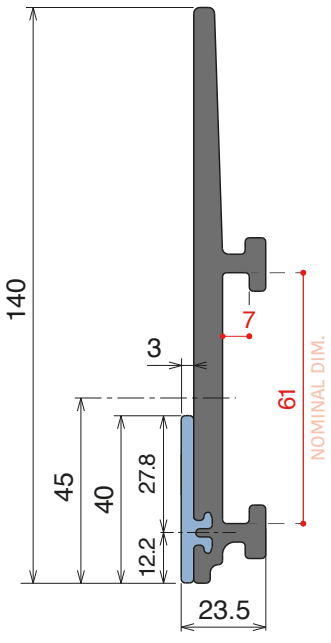

VERSION **B** - Label saver 4 cm

Base profile

Art-Nr.	Supply
18990	3 m bars

***Label saver** 2 cm*

Art-Nr.	Supply
18987	30 m coils

***Label saver** 4 cm*

Art-Nr.	Supply
18988	30 m coils

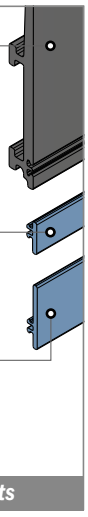

Single components

Easy Bendable
For the grooved version, just add "**-S**" to the related Article Nr.

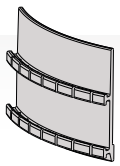

Oadby Core product range
Oadby Available from stock in Leicester
Easy Available from stock in Italy
Standard Produced to order in Italy

Movex

187 Guida laterale / *Side guide / Seitenführung*

Delivery: Easy | Standard | Fit on 60 x 6 mm

Article-Nr.	Material	Availability	Supply
18710BC	BluLub	Stock item	3 m bars
18705C	Blue	On request	3 m bars
18714C	Grey	On request	3 m bars

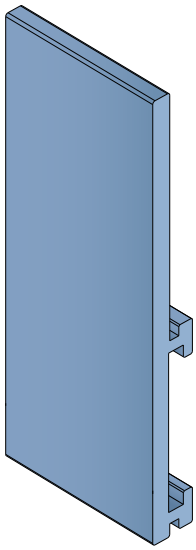

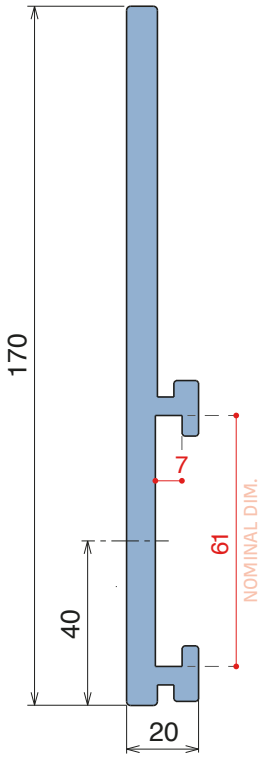

Plate
60 x 6 mm

Part 3311
pag 477

Option of application - Plate

Part 1089
Pag 410

Part 3311
pag 477

Option of application - Guide

Guida laterale con salva etichetta
Side guide with lable saver / Seitenführung mit Etikettenschutz

Article-Nr.	A	Material	Availability	Supply
18720BC	12	BluLub	Stock item	3 m bars
18730BC	20	BluLub	Stock item	3 m bars
18740BC	40	BluLub	Stock item	3 m bars
18725C	12	Blue	On request	3 m bars
18735C	20	Blue	On request	3 m bars
18745C	40	Blue	On request	3 m bars
18724C	12	Grey	On request	3 m bars
18734C	20	Grey	On request	3 m bars
18744C	40	Grey	On request	3 m bars

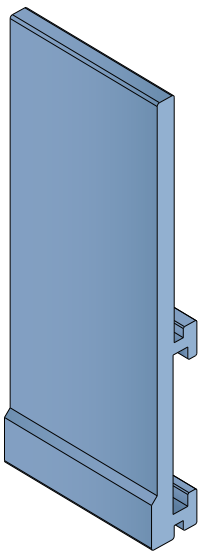

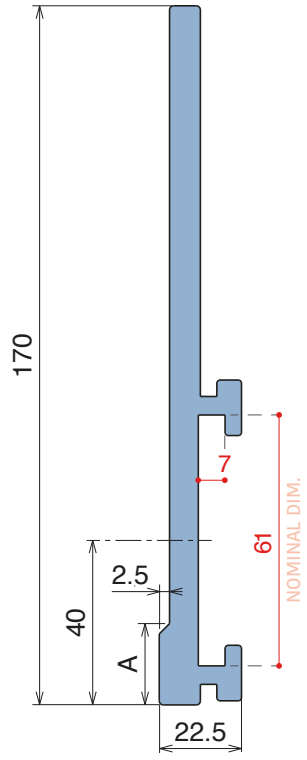

Easy Bendable
For the grooved version, just add "**-S**" to the related Article Nr.

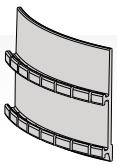

Plate
60 x 6 mm

Part 3311
pag 477

Option of application - Plate

Part 1089
Pag 410

Part 3311
pag 477

Option of application - Guide

Materiale / *Material / Materialien:*
Acciaio inox AISI 304
Stainless steel AISI 304
Edelstahl AISI 304

117

Profilo Omega / *M-Profile / M-Profil*

Delivery: Easy Standard

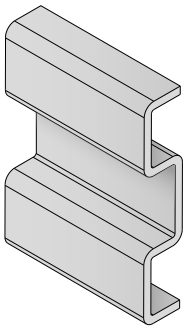

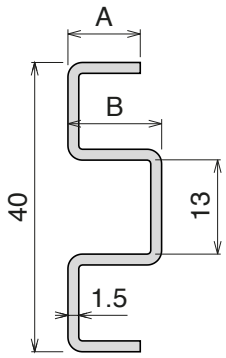

Used with part:
137 - 183 - 189 - 1079

Article-Nr.	A	B	Availability	Supply
11703C	6	10	Stock item	3 m bars
11703	6	10	On request	6 m bars
11701C	8	8	Stock item	3 m bars
11701	8	8	Stock item	6 m bars
11702C	10	10	Stock item	3 m bars
11702	10	10	On request	6 m bars

40x6/40x8
40x10

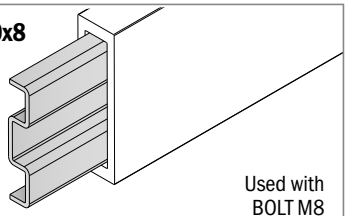

Used with
BOLT M8

Example of application

1055

Profilo in Acciaio inox / *Stainless steel Profile / Edelstahlprofil*

NEW

Delivery: Easy Standard

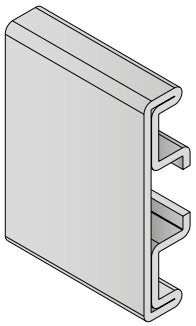

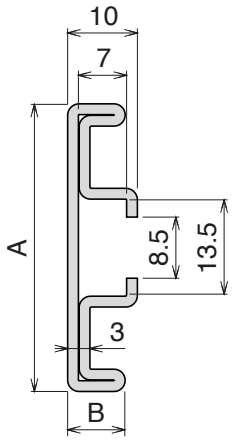

Used with part:
137 - 183 - 189 - 1079

Article-Nr.	A	B	Availability	Supply	Profile cover
105501C	40	8	Stock item	3 m bars	301409
105501	40	8	On request	6 m bars	301409
105503C	50	6	Stock item	3 m bars	301410
105503	50	6	On request	6 m bars	301410

40x8/50x6

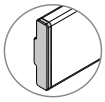

Profile cover

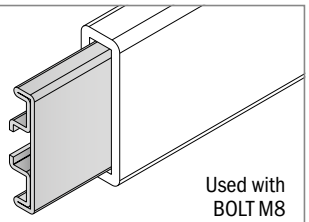

Used with
BOLT M8

Example of application

159-1088-1089

Profilo in Alluminio / *Aluminum Profile / Aluminium Profil*

NEW

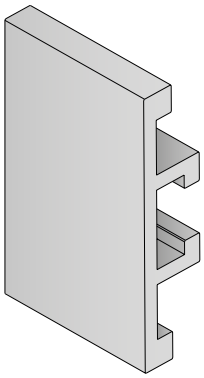

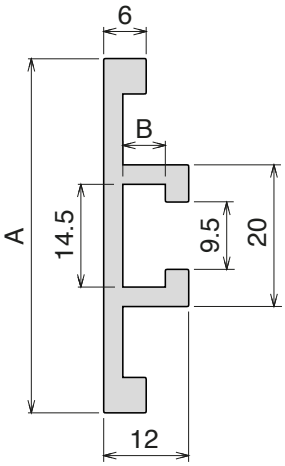

Used with Part:
158 - 187 - 189 - 193
1057 - 1075 - 1077 - 1078

Article-Nr.	A	B	Availability	Supply	Profile cover
15901C	50	6	Stock item	3 m bars	301411
15901	50	6	On request	6 m bars	301411
108801C	60	5	Stock item	3 m bars	301412
108801	60	5	On request	6 m bars	301412
108901C	60	6	Stock item	3 m bars	301413
108901	60	6	On request	6 m bars	301413

50x6/60x5
60x6

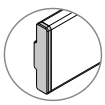

Profile cover

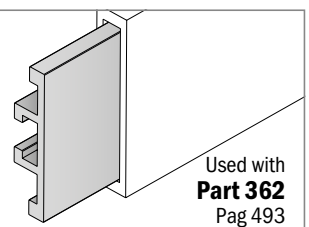

Used with
Part 362
Pag 493

Example of application

Oadby Core product range
Oadby Available from stock in Leicester
Easy Available from stock in Italy
Standard Produced to order in Italy

Movex

119 Guida conica / *Guide rail* / *Konische Führung*

Delivery: Easy | Standard

Stainless steel profile thickness: 1,5 mm

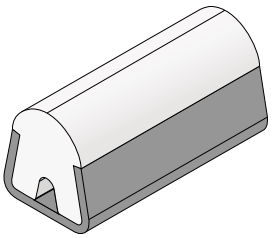

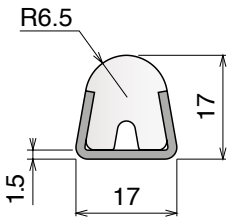

Article-Nr.	Material	Availability	Supply
11901BC	BluLub	Stock item	3 m bars
11901B	BluLub	On request	6 m bars
11901C	Ti-White	Stock item	3 m bars
11901	Ti-White	On request	6 m bars
11905C	Blue	On request	3 m bars
11905	Blue	On request	6 m bars

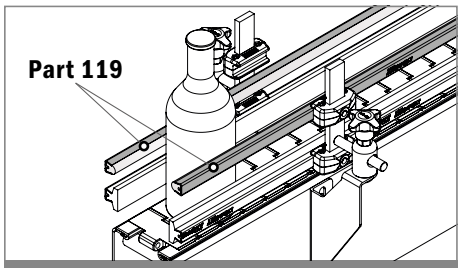

Example of application

Stainless steel profile thickness: 1,9 mm

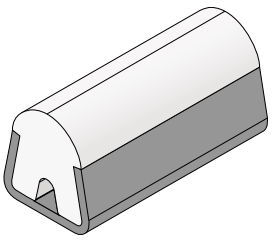

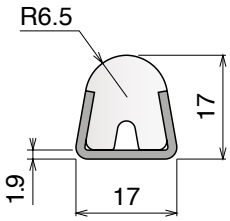

Article-Nr.	Material	Availability	Supply
11963B	BluLub	On request	3 m bars
11967B	BluLub	On request	6 m bars
11963	Ti-White	Stock item	3 m bars
11967	Ti-White	On request	6 m bars
11964C	Blue	On request	3 m bars
11964	Blue	On request	6 m bars

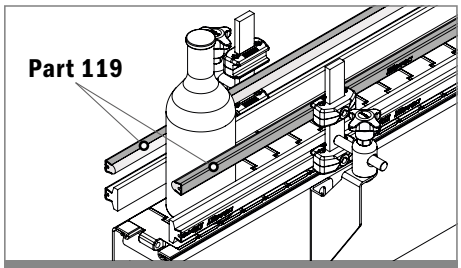

Example of application

Hygienic Version
NEW

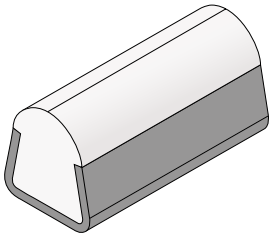

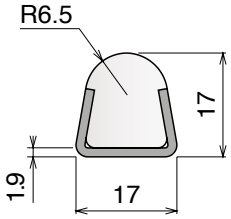

Article-Nr.	Material	Availability	Supply
11953B	BluLub	On request	3 m bars
11957B	BluLub	On request	6 m bars
11953	Ti-White	On request	3 m bars
11957	Ti-White	Stock item	6 m bars
11983C	Blue	On request	3 m bars
11987	Blue	On request	6 m bars

Materiale / *Material / Materialien:*
Profilo metallico: Acciaio inox AISI 304
Metal profile: Stainless steel AISI 304
Metallprofil: Edelstahl AISI 304

121

Guida conica / *Guide rail / Konische Führung*

Delivery: Easy Standard

Stainless steel profile thickness: 1,5 mm

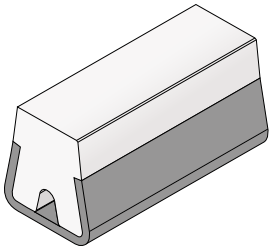

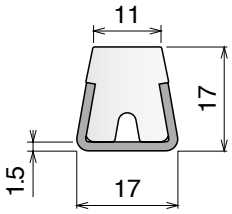

Article-Nr.	Material	Availability	Supply
12101BC	BluLub	On request	3 m bars
12101B	BluLub	On request	6 m bars
12101C	Ti-White	Stock item	3 m bars
12101	Ti-White	On request	6 m bars
12105C	Blue	On request	3 m bars
12105	Blue	On request	6 m bars

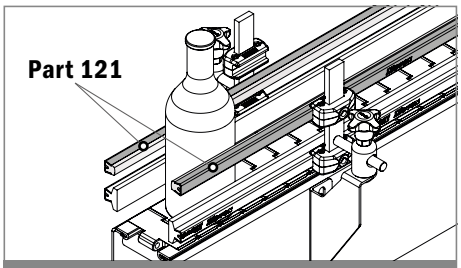

Example of application

Stainless steel profile thickness: 1,9 mm

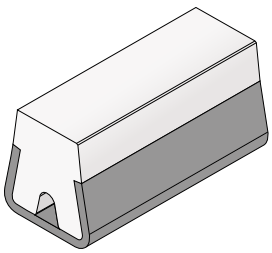

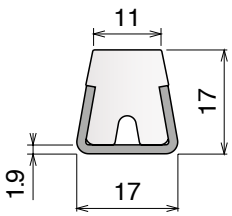

Article-Nr.	Material	Availability	Supply
12163B	BluLub	On request	3 m bars
12167B	BluLub	On request	6 m bars
12163	Ti-White	Stock item	3 m bars
12167	Ti-White	On request	6 m bars
12173	Blue	On request	3 m bars
12177	Blue	On request	6 m bars

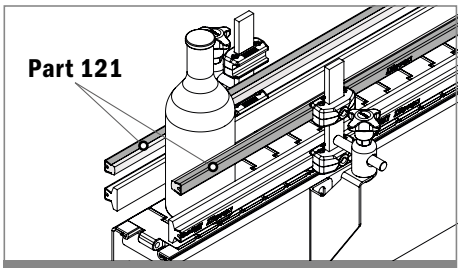

Example of application

Hygienic Version
NEW

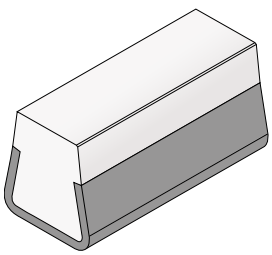

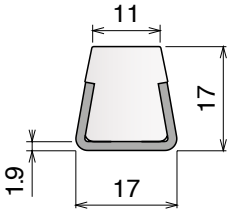

Article-Nr.	Material	Availability	Supply
12153B	BluLub	On request	3 m bars
12157B	BluLub	On request	6 m bars
12153	Ti-White	Stock item	3 m bars
12157	Ti-White	On request	6 m bars
12183	Blue	On request	3 m bars
12187	Blue	On request	6 m bars

Core product range
Available from stock in Leicester
Easy Available from stock in Italy
Standard Produced to order in Italy

Movex

120

Guida conica / *Guide rail* / *Konische Führung*

Delivery: Easy | Standard

Stainless steel profile thickness: 1,5 mm

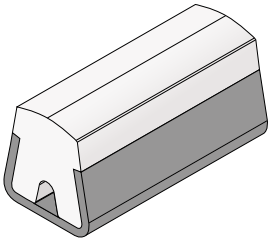

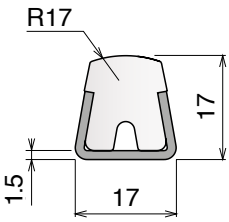

Article-Nr.	Material	Availability	Supply
12001BC	BluLub	On request	3 m bars
12001B	BluLub	On request	6 m bars
12001C	Ti-White	Stock item	3 m bars
12001	Ti-White	On request	6 m bars
12005C	Blue	On request	3 m bars
12005	Blue	On request	6 m bars

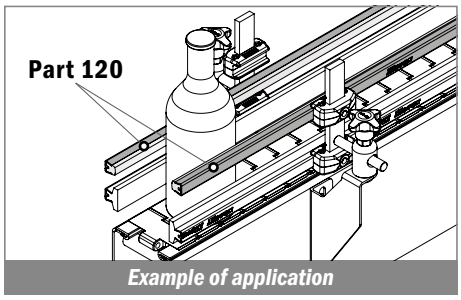

Example of application

Stainless steel profile thickness: 1,9 mm

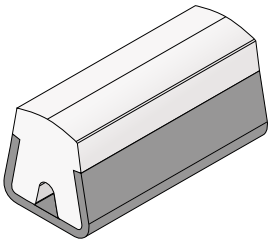

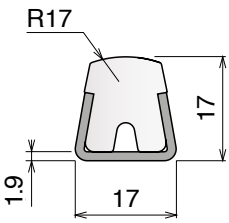

Article-Nr.	Material	Availability	Supply
12063B	BluLub	On request	3 m bars
12067B	BluLub	On request	6 m bars
12063	Ti-White	Stock item	3 m bars
12067	Ti-White	On request	6 m bars
12063BL	Blue	On request	3 m bars
12067BL	Blue	On request	6 m bars

152

Guida conica / *Guide rail* / *Konische Führung*

Delivery: Easy | Standard

Stainless steel profile thickness: 1,5 mm

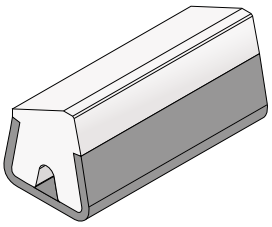

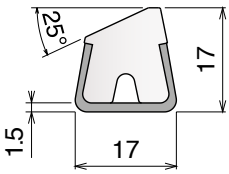

Article-Nr.	Material	Availability	Supply
15200BC	BluLub	On request	3 m bars
15201C	Ti-White	Stock item	3 m bars
15205C	Blue	On request	3 m bars

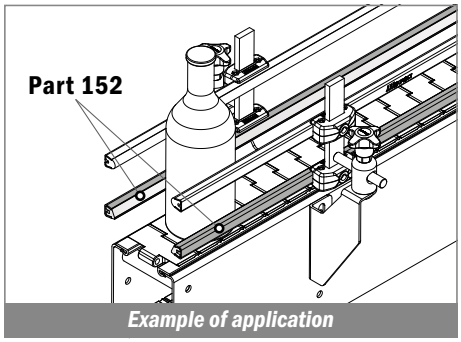

Example of application

Stainless steel profile thickness: 1,9 mm

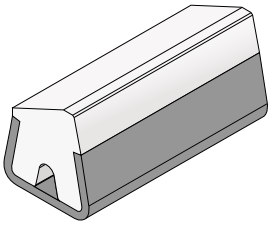

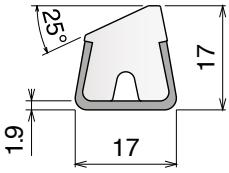

Article-Nr.	Material	Availability	Supply
15260BC	BluLub	On request	3 m bars
15263	Ti-White	On request	3 m bars
15265C	Blue	On request	3 m bars

Materiale / *Material* / *Materialien:*
Profilo metallico: Acciaio inox AISI 304
Metal profile: Stainless steel AISI 304
Metallprofil: Edelstahl AISI 304

1067

Guida conica / *Guide rail* / *Konische Führung*

Stainless steel profile thickness: 1,5 mm

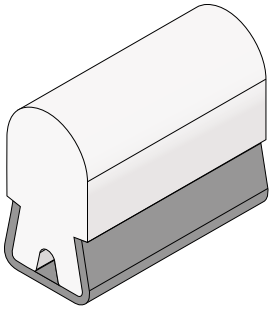

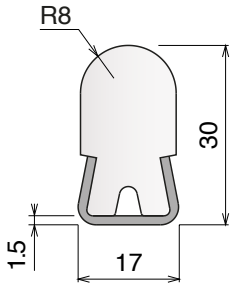

Article-Nr.	Material	Availability	Supply
106700BC	BluLub	On request	3 m bars
106701C	Ti-White	On request	3 m bars
106705C	Blue	On request	3 m bars

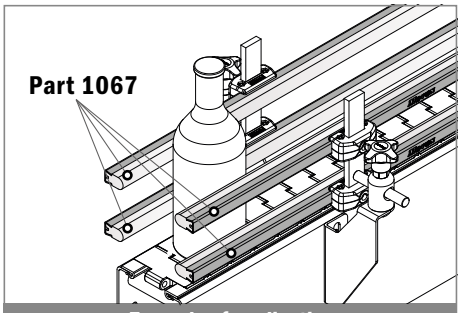

Example of application

Stainless steel profile thickness: 1,9 mm

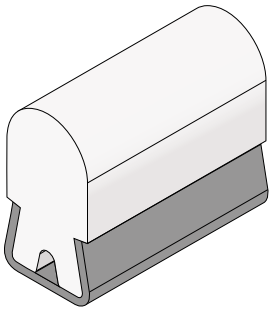

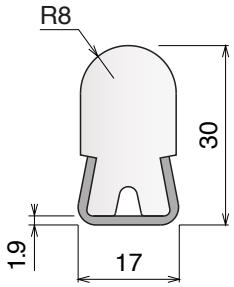

Article-Nr.	Material	Availability	Supply
106760BC	BluLub	On request	3 m bars
106763	Ti-White	On request	3 m bars
106765C	Blue	On request	3 m bars

143

Guida conica / *Guide rail* / *Konische Führung*

Delivery: Easy | Standard

Stainless steel profile thickness: 1,5 mm

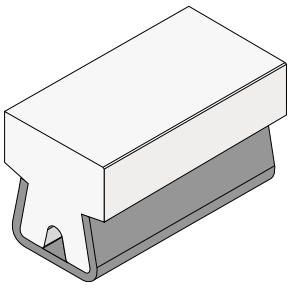

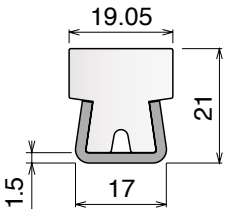

Article-Nr.	Material	Availability	Supply
14300BC	BluLub	On request	3 m bars
14301C	Ti-White	On request	3 m bars
14305C	Blue	On request	3 m bars

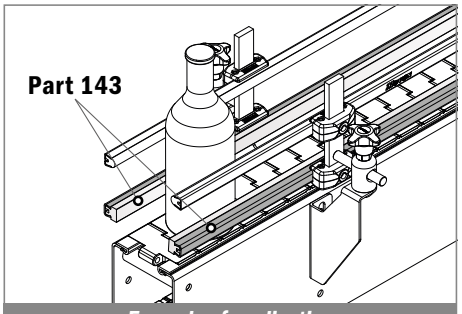

Example of application

Stainless steel profile thickness: 1,9 mm

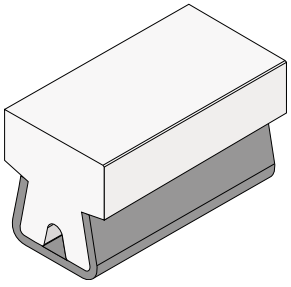

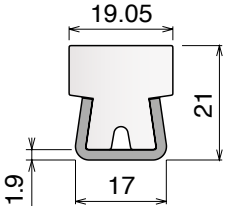

Article-Nr.	Material	Availability	Supply
14360BC	BluLub	On request	3 m bars
14363	Ti-White	Stock item	3 m bars
14365C	Blue	On request	3 m bars

Core product range
Available from stock in Leicester
Easy Available from stock in Italy
Standard Produced to order in Italy

Movex

122

Guida conica / *Guide rail* / *Konische Führung*

Delivery: Easy Standard

Stainless steel profile thickness: 1,5 mm

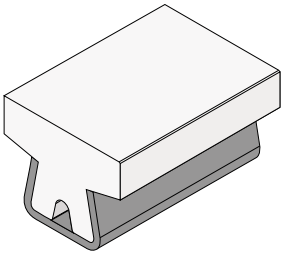

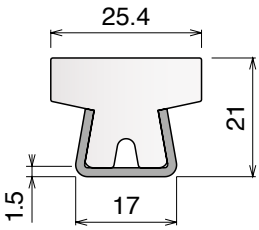

Article-Nr.	Material	Availability	Supply
12200BC	BluLub	On request	3 m bars
12201C	Ti-White	Stock item	3 m bars
12205C	Blue	On request	3 m bars

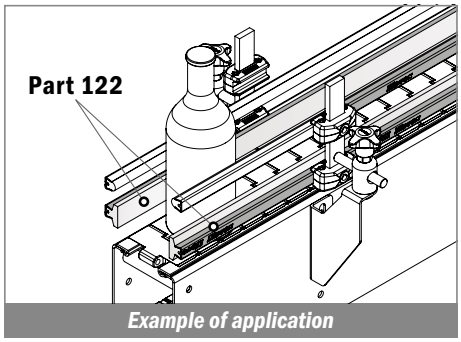

Example of application

Stainless steel profile thickness: 1,9 mm

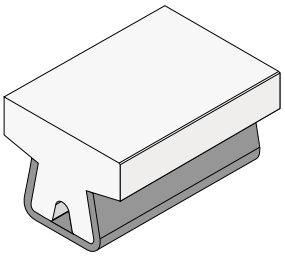

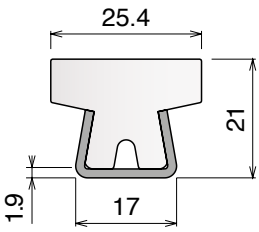

Article-Nr.	Material	Availability	Supply
12260BC	BluLub	On request	3 m bars
12263	Ti-White	Stock item	3 m bars
12263BLC	Blue	On request	3 m bars

123

Guida conica / *Guide rail* / *Konische Führung*

Delivery: Easy Standard

Stainless steel profile thickness: 1,5 mm

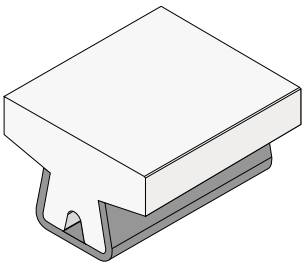

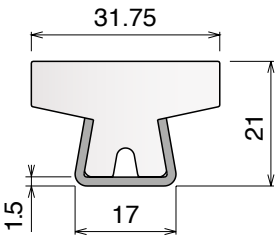

Article-Nr.	Material	Availability	Supply
12300BC	BluLub	On request	3 m bars
12301C	Ti-White	Stock item	3 m bars
12305C	Blue	On request	3 m bars

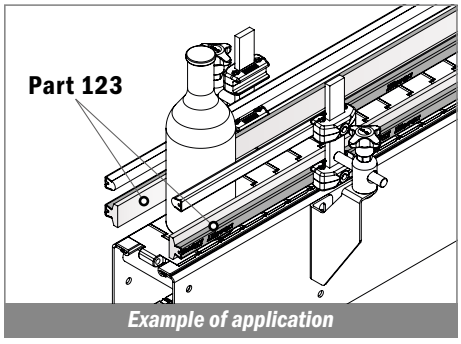

Example of application

Stainless steel profile thickness: 1,9 mm

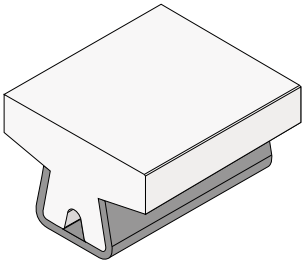

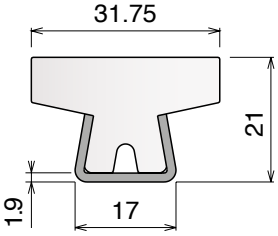

Article-Nr.	Material	Availability	Supply
12360BC	BluLub	On request	3 m bars
12363	Ti-White	Stock item	3 m bars
12363BLC	Blue	On request	3 m bars

Materiale / *Material / Materialien:*
Profilo metallico: Acciaio inox AISI 304
Metal profile: Stainless steel AISI 304
Metallprofil: Edelstahl AISI 304

140 Guida conica / *Guide rail / Konische Führung*

Delivery: Easy Standard

Stainless steel profile thickness: 1,5 mm

Article-Nr.	Material	Availability	Supply
14000BC	BluLub	On request	3 m bars
14001C	Ti-White	Stock item	3 m bars
14005C	Blue	On request	3 m bars

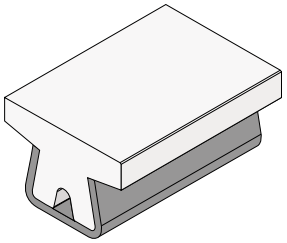

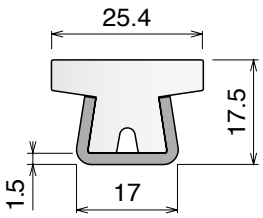

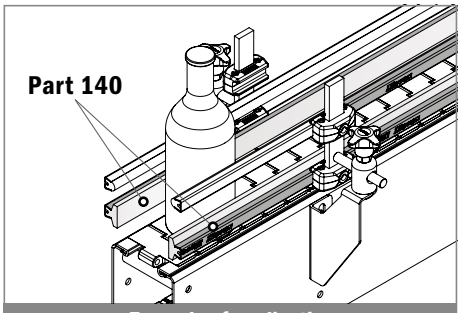

Example of application

Stainless steel profile thickness: 1,9 mm

Article-Nr.	Material	Availability	Supply
14060BC	BluLub	On request	3 m bars
14063	Ti-White	Stock item	3 m bars
14063BLC	Blue	On request	3 m bars

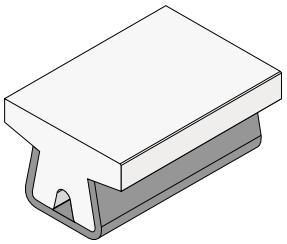

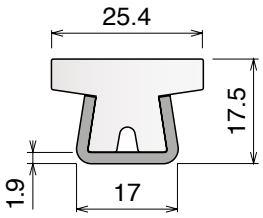

146 Guida conica / *Guide rail / Konische Führung*

Stainless steel profile thickness: 1,5 mm

Article-Nr.	Material	Availability	Supply
14600BC	BluLub	On request	3 m bars
14601C	Ti-White	On request	3 m bars
14605C	Blue	On request	3 m bars

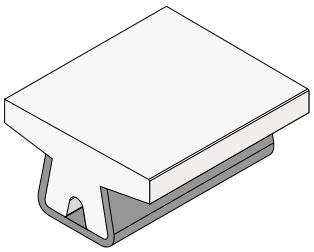

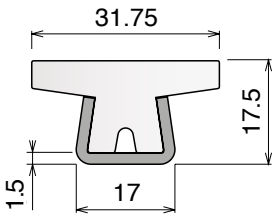

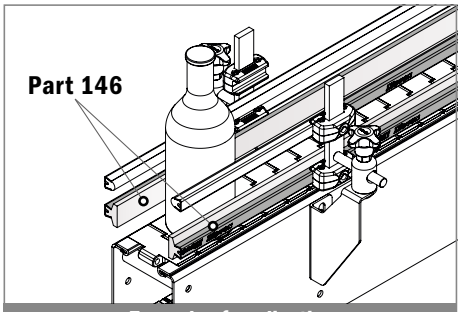

Example of application

Stainless steel profile thickness: 1,9 mm

Article-Nr.	Material	Availability	Supply
14660BC	BluLub	On request	3 m bars
14663	Ti-White	On request	3 m bars
14663BLC	Blue	On request	3 m bars

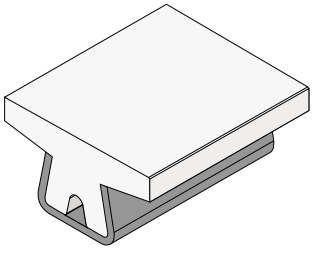

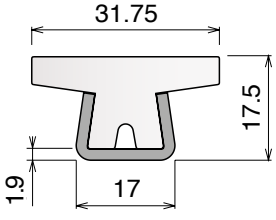

Core product range
Available from stock in Leicester
Easy Available from stock in Italy
Standard Produced to order in Italy

Movex

124

Guida conica / *Guide rail* / *Konische Führung*

Delivery: Easy Standard

Stainless steel profile thickness: 1,5 mm

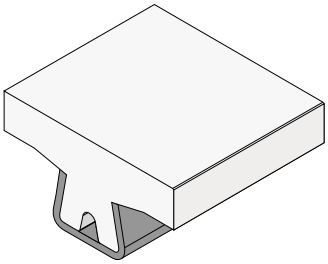

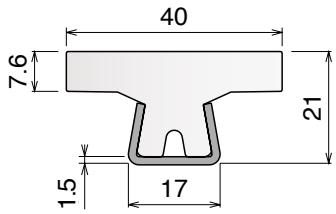

Article-Nr.	Material	Availability	Supply
12400BC	BluLub	On request	3 m bars
12401C	Ti-White	Stock item	3 m bars
12405C	Blue	On request	3 m bars

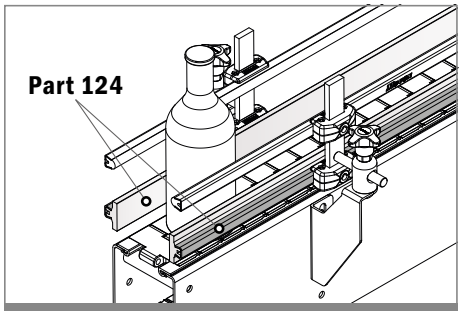

Example of application

Stainless steel profile thickness: 1,9 mm

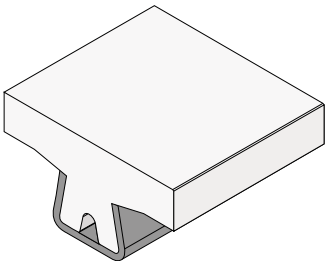

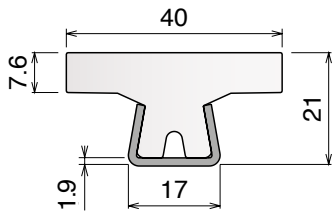

Article-Nr.	Material	Availability	Supply
12460BC	BluLub	On request	3 m bars
12463	Ti-White	Stock item	3 m bars
12463BLC	Blue	On request	3 m bars

141

Guida conica / *Guide rail* / *Konische Führung*

Delivery: Easy Standard

Stainless steel profile thickness: 1,5 mm

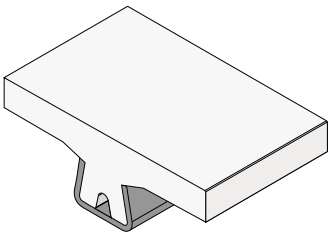

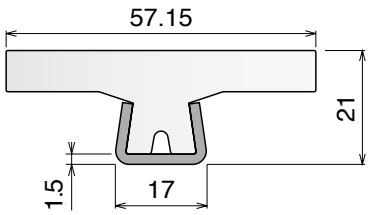

Article-Nr.	Material	Availability	Supply
14100BC	BluLub	On request	3 m bars
14101C	Ti-White	Stock item	3 m bars
14105C	Blue	On request	3 m bars

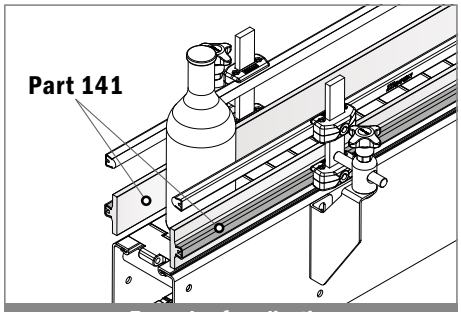

Example of application

Stainless steel profile thickness: 1,9 mm

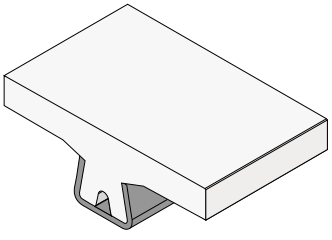

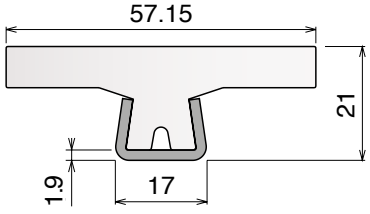

Article-Nr.	Material	Availability	Supply
14160BC	BluLub	On request	3 m bars
14163	Ti-White	Stock item	3 m bars
14163BLC	Blue	On request	3 m bars

Materiale / *Material / Materialien:*
Profilo metallico: Acciaio inox AISI 304
Metal profile: Stainless steel AISI 304
Metallprofil: Edelstahl AISI 304

142

Guida conica / *Guide rail / Konische Führung*

Stainless steel profile thickness: 1,5 mm

Article-Nr.	Material	Availability	Supply
14200BC	BluLub	On request	3 m bars
14201C	Ti-White	On request	3 m bars
14205C	Blue	On request	3 m bars

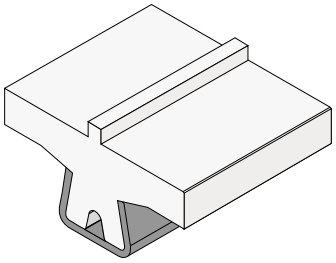

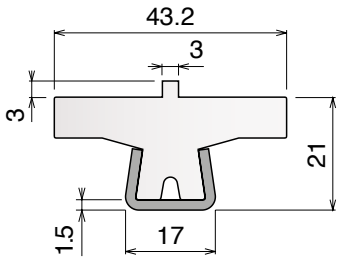

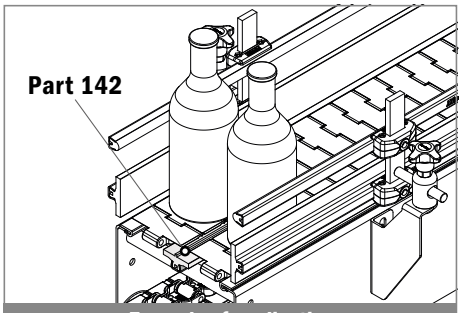

Example of application

Stainless steel profile thickness: 1,9 mm

Article-Nr.	Material	Availability	Supply
14260BC	BluLub	On request	3 m bars
14263	Ti-White	On request	3 m bars
14263BLC	Blue	On request	3 m bars

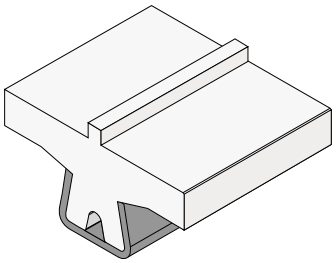

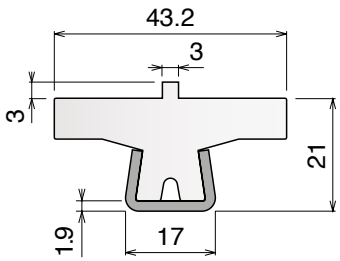

125

Guida conica / *Guide rail / Konische Führung*

Delivery: Easy Standard

Stainless steel profile thickness: 1,5 mm

Article-Nr.	Material	Availability	Supply
12500BC	BluLub	On request	3 m bars
12501C	Ti-White	On request	3 m bars
12505C	Blue	On request	3 m bars

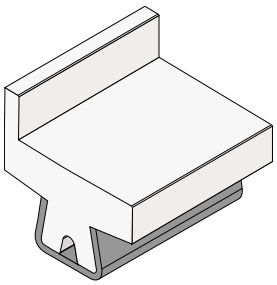

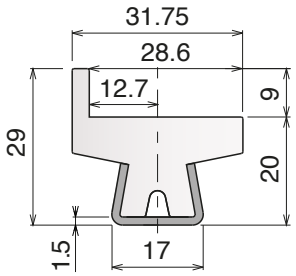

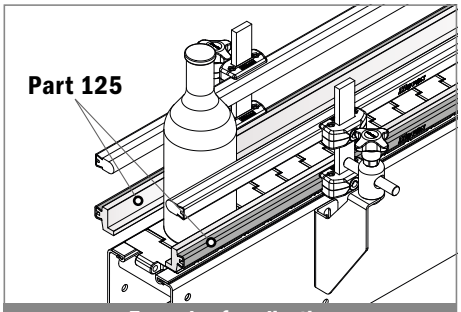

Example of application

Stainless steel profile thickness: 1,9 mm

Article-Nr.	Material	Availability	Supply
12560BC	BluLub	On request	3 m bars
12563	Ti-White	Stock item	3 m bars
12563BLC	Blue	On request	3 m bars

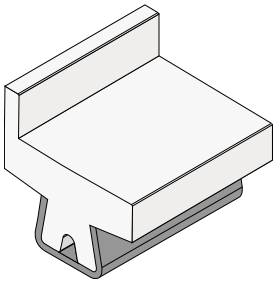

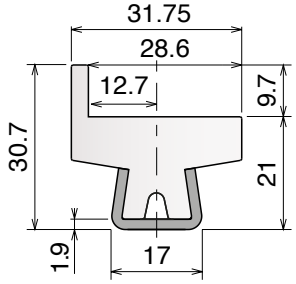

Core product range
Available from stock in Leicester
Easy Available from stock in Italy
Standard Produced to order in Italy

Movex

144

Guida conica / *Guide rail* / *Konische Führung*

Delivery: Easy Standard

Stainless steel profile thickness: 1,5 mm

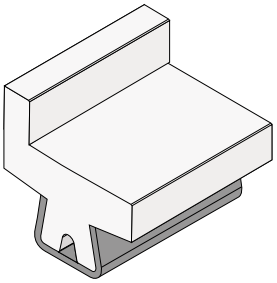

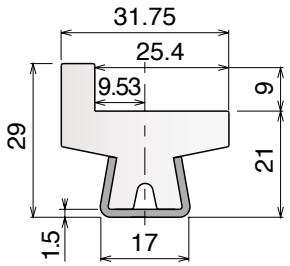

Article-Nr.	Material	Availability	Supply
14400BC	BluLub	On request	3 m bars
14401C	Ti-White	Stock item	3 m bars
14405C	Blue	On request	3 m bars

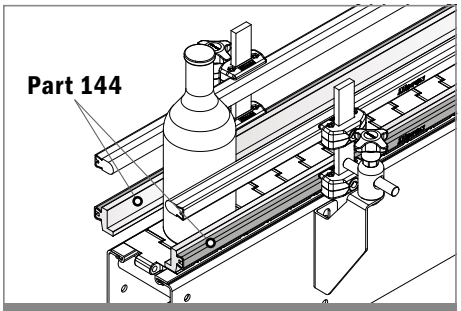

Example of application

Stainless steel profile thickness: 1,9 mm

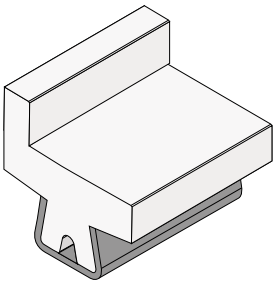

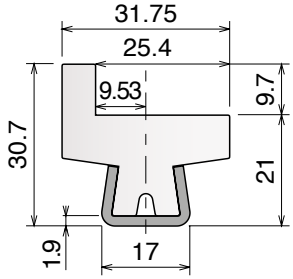

Article-Nr.	Material	Availability	Supply
14460BC	BluLub	On request	3 m bars
14463	Ti-White	Stock item	3 m bars
14463BLC	Blue	On request	3 m bars

184

Guida conica / *Guide rail* / *Konische Führung*

Stainless steel profile thickness: 1,5 mm

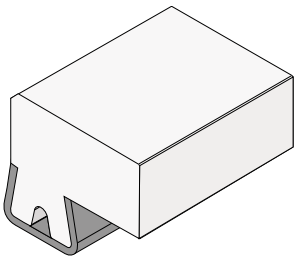

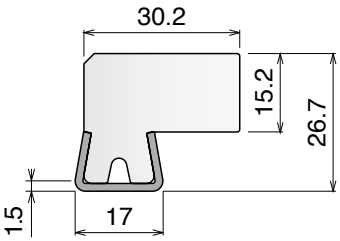

Article-Nr.	Material	Availability	Supply
18400BC	BluLub	On request	3 m bars
18401C	Ti-White	On request	3 m bars
18405C	Blue	On request	3 m bars

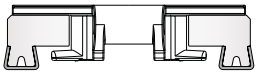

Example of application

Stainless steel profile thickness: 1,9 mm

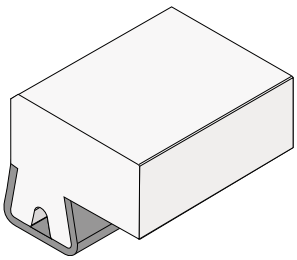

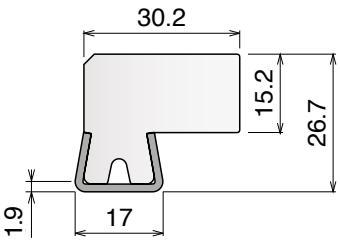

Article-Nr.	Material	Availability	Supply
18460BC	BluLub	On request	3 m bars
18463	Ti-White	On request	3 m bars
18463BLC	Blue	On request	3 m bars

Materiale / *Material / Materialien:*
Profilo metallico: Acciaio inox AISI 304
Metal profile: Stainless steel AISI 304
Metallprofil: Edelstahl AISI 304

145

Guida conica / *Guide rail / Konische Führung*

Stainless steel profile thickness: 1,5 mm

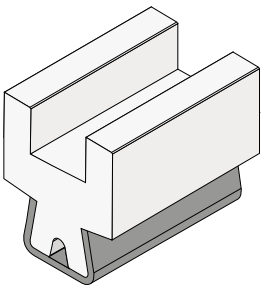

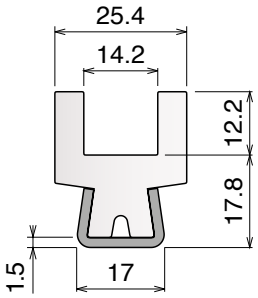

Article-Nr.	Material	Availability	Supply
14503C	BluLub	On request	3 m bars
14504C	Ti-White	On request	3 m bars
14505C	Blue	On request	3 m bars

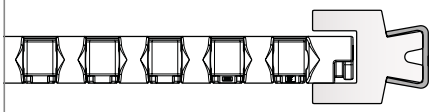

Bendable profile, generally used with sideflexing belt 600 series.

Example of application

Stainless steel profile thickness: 1,9 mm

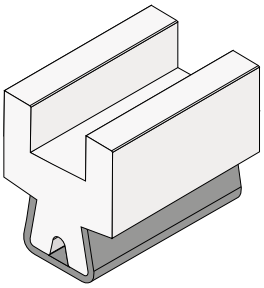

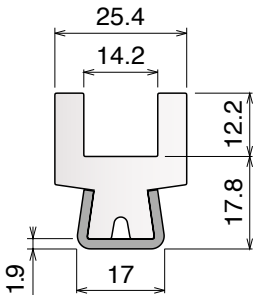

Article-Nr.	Material	Availability	Supply
14563	BluLub	On request	3 m bars
14564	Ti-White	On request	3 m bars
14565	Blue	On request	3 m bars

NEW

1087

Guida conica / *Guide rail / Konische Führung*

Stainless steel profile thickness: 1,9 mm

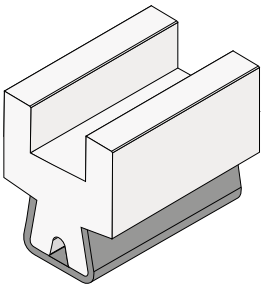

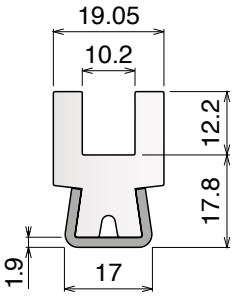

Article-Nr.	Material	Availability	Supply
108763	BluLub	On request	3 m bars
108764	Ti-White	On request	3 m bars
108765	Blue	On request	3 m bars

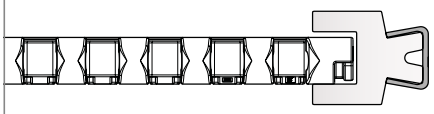

Bendable profile, generally used with modular belts with 8,7 mm height.

Example of application

Oadby Core product range
Oadby Available from stock in Leicester
Easy Available from stock in Italy
Standard Produced to order in Italy
Movex

191

Guida conica / *Guide rail* / *Konische Führung*

Stainless steel profile thickness: 1,9 mm

Article-Nr.	Material	Availability	Supply
19100BC	BluLub	On request	3 m bars
19101C	Ti-White	Stock item	3 m bars
19105C	Blue	On request	3 m bars

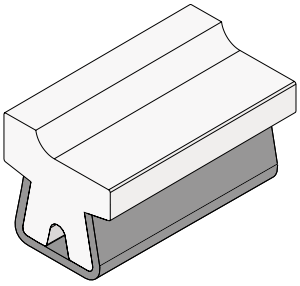

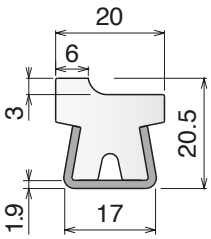

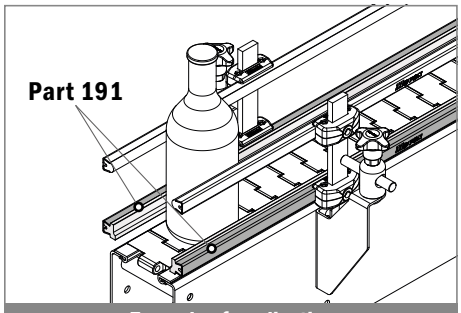

Example of application

NEW

126

Guida conica / *Guide rail* / *Konische Führung*

Stainless steel profile thickness: 1,5 mm

Article-Nr.	Material	Availability	Supply
12600BC	BluLub	On request	3 m bars
12601C	Ti-White	On request	3 m bars
12605C	Blue	On request	3 m bars

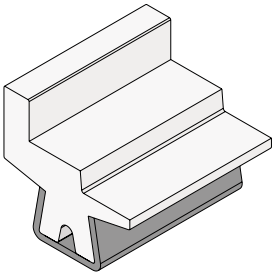

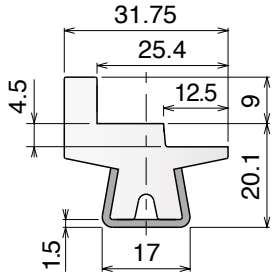

Generally used for accumulation system with 530 Pro LBP.

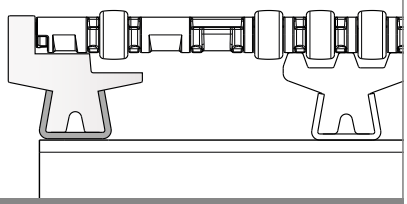

Example of application

NEW

127

Guida conica / *Guide rail* / *Konische Führung*

Stainless steel profile thickness: 1,5 mm

Article-Nr.	Material	Availability	Supply
12700BC	BluLub	On request	3 m bars
12701C	Ti-White	On request	3 m bars
12705C	Blue	On request	3 m bars

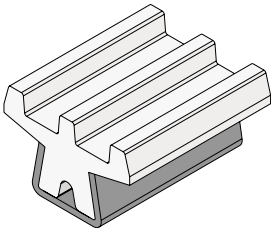

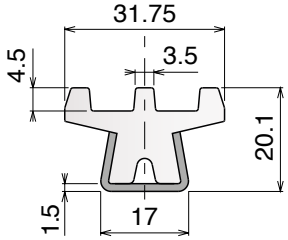

Generally used for accumulation system with 530 Pro LBP.

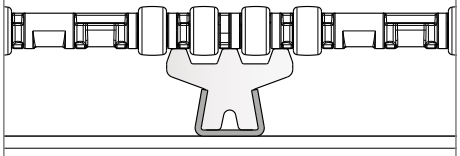

Example of application

Materiale / *Material / Materialien:*
Profilo metallico: Acciaio inox AISI 304
Metal profile: Stainless steel AISI 304
Metallprofil: Edelstahl AISI 304

NEW

128 Guida conica / *Guide rail / Konische Führung*

Stainless steel profile thickness: 1,5 mm

Article-Nr.	Material	Availability	Supply
12800BC	BluLub	On request	3 m bars
12801C	Ti-White	On request	3 m bars
12805C	Blue	On request	3 m bars

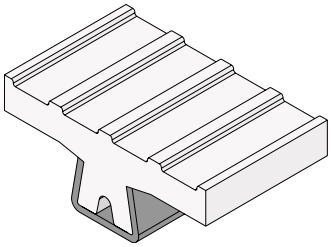

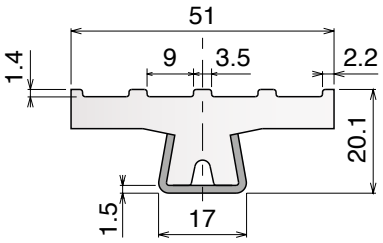

Generally used for driven rollers,
for alignment/distribution system with 530 Pro LBP.

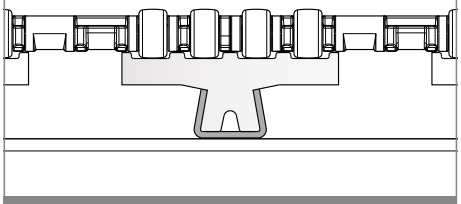

Example of application

NEW

129 Guida conica / *Guide rail / Konische Führung*

Stainless steel profile thickness: 1,5 mm

Article-Nr.	Material	Availability	Supply
12900BC	BluLub	On request	3 m bars
12901C	Ti-White	On request	3 m bars
12905C	Blue	On request	3 m bars

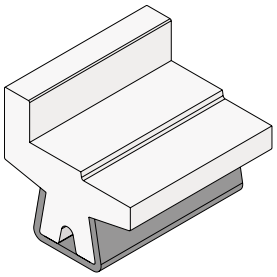

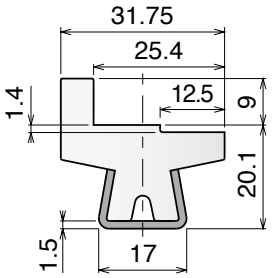

Generally used for driven rollers,
for alignment/distribution system with 530 Pro LBP.

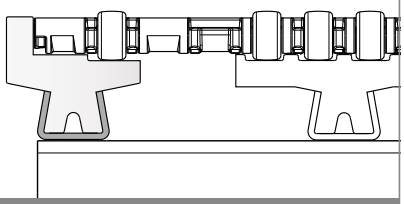

Example of application

Oadby Core product range
Oadby Available from stock in Leicester
Easy Available from stock in Italy
Standard Produced to order in Italy

Movex

198-199

Macchina curvatrice / ***Bending machine*** / ***Biegemaschine***

Delivery: Easy Standard

NEW

Electric Bending machine

Article-Nr. 19848

Dimension base: 665 x 740 mm
Height: 1400 mm
Approximate weight: 170 Kg
Shafts diameter: 30 mm
Rolls diameter: 137 mm
Geared motor: HP 1
Shafts speed: 9 RPM
Steel frame
Two forming rolls
Steel shafts in special steel

Manual Bending machine

Article-Nr. 19999

Dimension: 570 x 260 mm
Approximate weight: 19 Kg
Shafts diameter: 25 mm
Height: 180 mm
Steel frame

To achieve the correct curvature please follow below steps:

1 | Identify correct curve radius angle

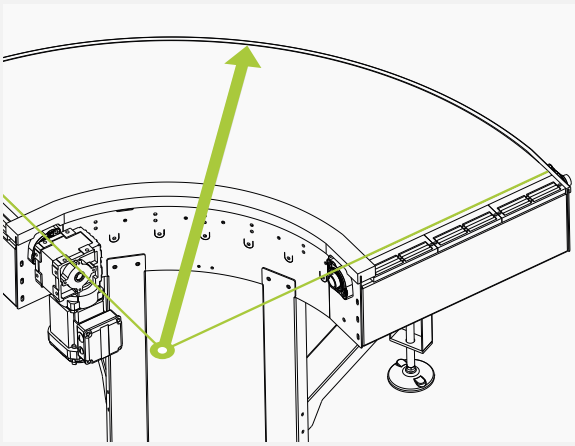

2 | Insert the plate into the profile

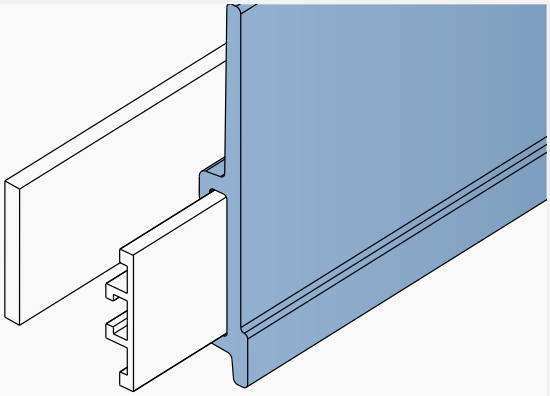

3 | Bend assembled profile

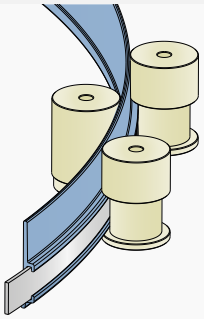

For the related rollers, please refer to our general catalogue or ask to sales representative.

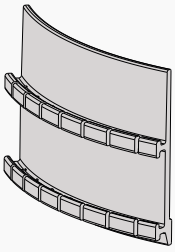

Easy Bendable
For the grooved version, you don't need to bend the profile but you can mount it directly on the curved steel plate.

4 | Assemble the curved profile on the line

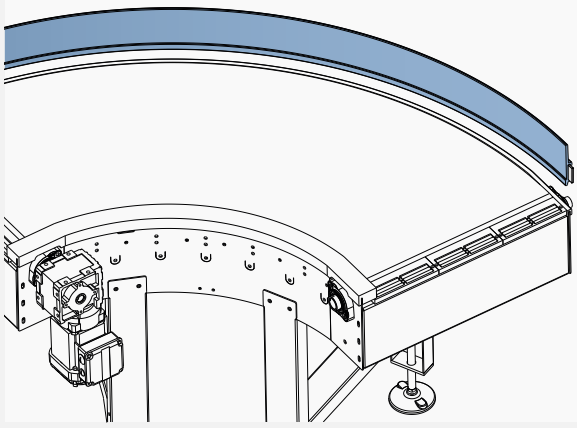

*For narrower profiles, bending operation can be dare directly on the line, by hand.

Material:
Polyethylene UHMW-PE with molecular density 5,600,000 g/mol
Linear expansion coefficient: $1.1x10^{-4}$ °F^{-1} ($2x10^{-4}$ °C^{-1})
Operating temperature: -40 to 176°F (-40 to +80°C)

151 Rulli per macchina curvatrice / *Roller for bending machine / Rollen für Biegemaschine*

Ø 25 mm Manual bending machine
Ø 30 mm Electric bending machine

Internal curve

External curve

Article-Nr.	Ø (mm)	Suitable for Part.
15101	25	119 - 120 - 121 - 152
15101E	30	119 - 120 - 121 - 152

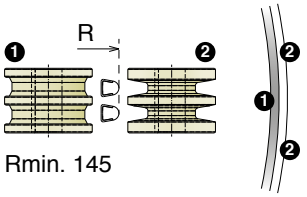

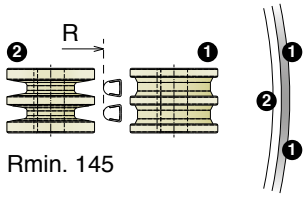

Article-Nr.	Ø (mm)	Suitable for Part.
15102	25	122 - 123 - 124 - 142 - 140 - 146
15102E	30	122 - 123 - 124 - 142 - 140 - 146

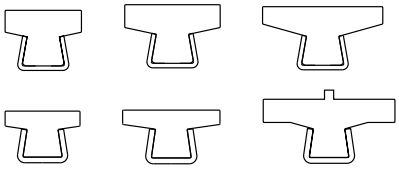

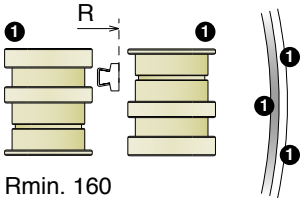

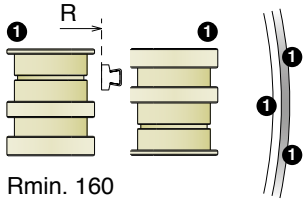

Article-Nr.	Ø (mm)	Suitable for Part.
15103	25	141
15103E	30	141

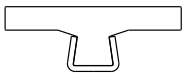

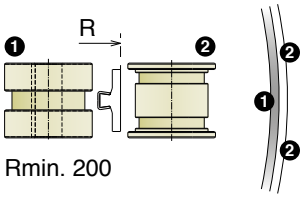

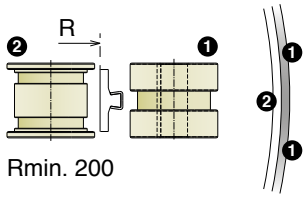

Article-Nr.	Ø (mm)	Suitable for Part.
15104	25	144
15104E	30	144

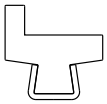

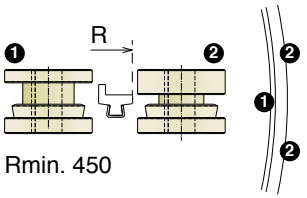

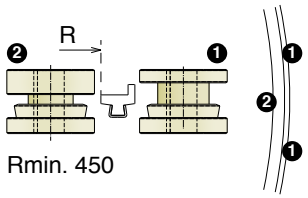

Article-Nr.	Ø (mm)	Suitable for Part.
15105	25	*Ø8 - Ø 10 - Ø12*
15105E	30	*Ø8 - Ø 10 - Ø12*

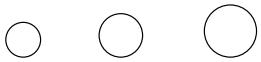

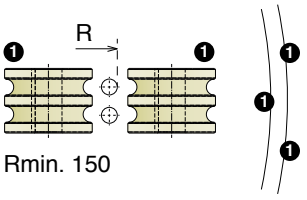

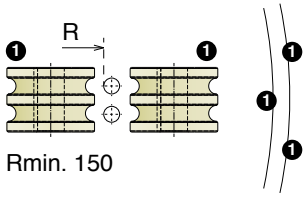

Oadby Core product range
Oadby Available from stock in Leicester
Easy Available from stock in Italy
Standard Produced to order in Italy
Movex®

Material:
Polyethylene UHMW-PE with molecular density 5,600,000 g/mol
Linear expansion coefficient: $1.1x10^{-4}$ °F^{-1} ($2x10^{-4}$ °C^{-1})
Operating temperature: -40 to 176°F (-40 to +80°C)

151 Rulli per macchina curvatrice / *Roller for bending machine* / *Rollen für Biegemaschine*

Ø 25 mm Manual bending machine
Ø 30 mm Electric bending machine

Internal curve

External curve

Article-Nr.	Ø (mm)	Suitable for Part.
15109	25	358
15109E	30	358

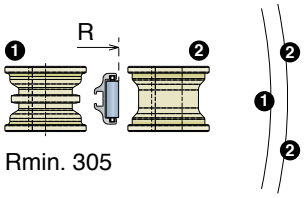

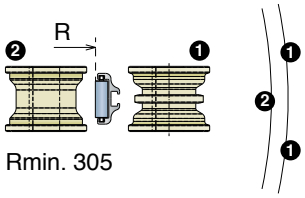

Article-Nr.	Ø (mm)	Suitable for Part.
15110	25	360
15110E	30	360

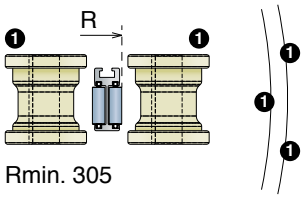

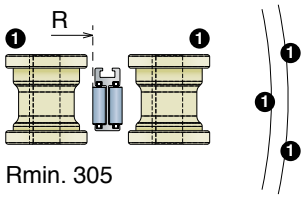

Article-Nr.	Ø (mm)	Suitable for Part.
15106	25	359
15106E	30	359

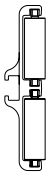

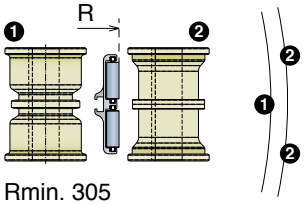

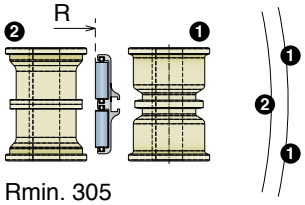

Article-Nr.	Ø (mm)	Suitable for Part.
15107	25	361
15107E	30	361

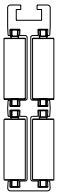

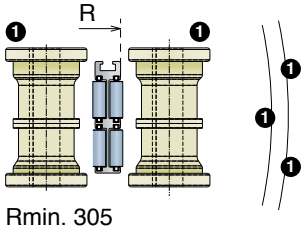

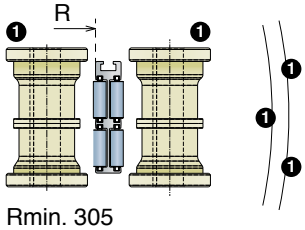

Article-Nr.	Ø (mm)	Suitable for Part.
15108	25	117
15108E	30	117

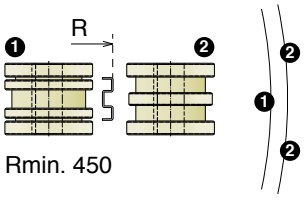

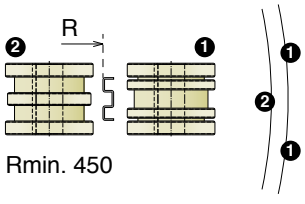

170

Guida collo / *Neck guide / Nackenführung*

Delivery: Easy Standard Fit on 2,5 mm

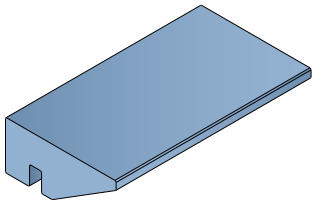

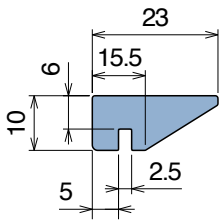

Article-Nr.	Material	Availability	Supply
17001B	BluLub	Stock item	3 m bars
17002B	BluLub	Stock item	6 m bars
17000B	BluLub	Stock item	30 m coils
17001	Ti-White	On request	3 m bars
17002	Ti-White	On request	6 m bars
17000	Ti-White	On request	30 m coils
17005C	Blue	On request	3 m bars
17005	Blue	On request	6 m bars
17005-30	Blue	On request	30 m coils

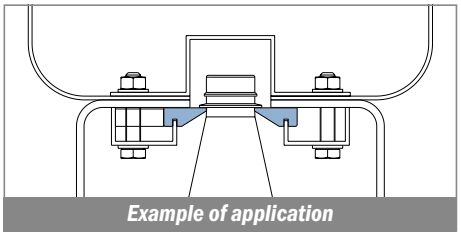
Example of application

168

Guida collo / *Neck guide / Nackenführung*

Delivery: Easy Standard Fit on 2,5 mm

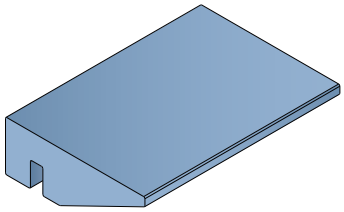

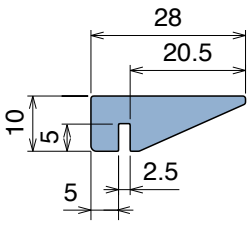

Article-Nr.	Material	Availability	Supply
16801B	BluLub	Stock item	3 m bars
16802B	BluLub	On request	6 m bars
16800B	BluLub	Stock item	30 m coils
16801	Ti-White	On request	3 m bars
16802	Ti-White	On request	6 m bars
16800	Ti-White	On request	30 m coils
16805C	Blue	On request	3 m bars
16805	Blue	On request	6 m bars
16805-30	Blue	On request	30 m coils

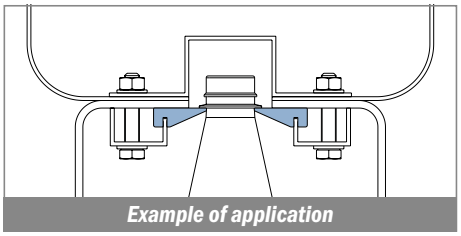
Example of application

169

Guida collo / *Neck guide / Nackenführung*

Delivery: Easy Standard Fit on 2,5 mm

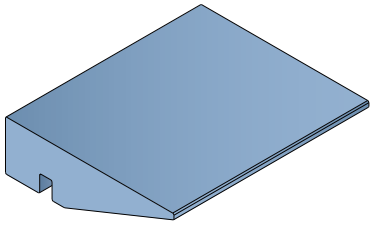

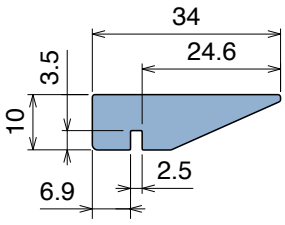

Article-Nr.	Material	Availability	Supply
16901B	BluLub	Stock item	3 m bars
16902B	BluLub	On request	6 m bars
16900B	BluLub	Stock item	30 m coils
16901	Ti-White	On request	3 m bars
16902	Ti-White	On request	6 m bars
16900	Ti-White	On request	30 m coils
16905C	Blue	On request	3 m bars
16905	Blue	On request	6 m bars
16905-30	Blue	On request	30 m coils

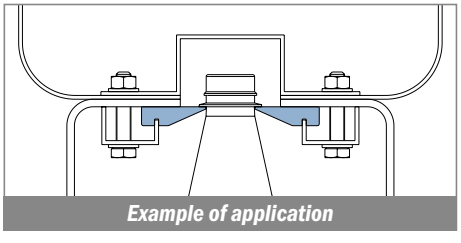
Example of application

Oadby Core product range
Oadby Available from stock in Leicester
Easy Available from stock in Italy
Standard Produced to order in Italy

Movex®

167

Guida collo / *Neck guide / Nackenführung*

Delivery: Easy | Standard | Fit on 1.8 - 2 mm

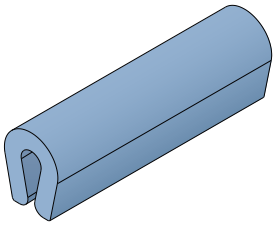

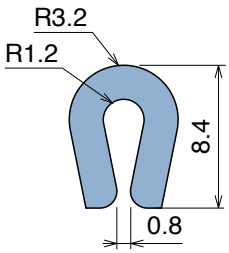

Article-Nr.	Material	Availability	Supply
16700BC	BluLub	Stock item	3 m bars
16700B	BluLub	On request	6 m bars
16700B-30	BluLub	Stock item	30 m coils
16700C	Ti-White	On request	3 m bars
16700	Ti-White	On request	6 m bars
16700-30	Ti-White	On request	30 m coils
16705C	Blue	On request	3 m bars
16705	Blue	On request	6 m bars
16705-30	Blue	On request	30 m coils

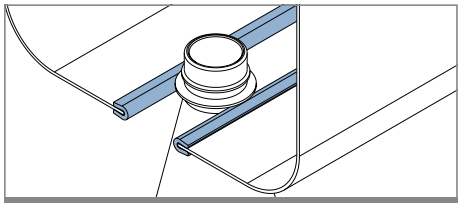

Example of application

192

Guida collo / *Neck guide / Nackenführung*

Delivery: Easy | Standard | Fit on 1.8 - 2 mm

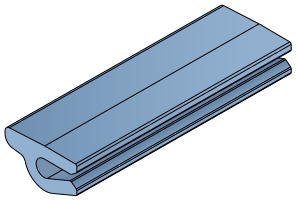

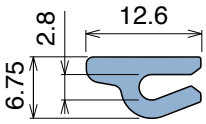

Article-Nr.	Material	Availability	Supply
19200B	BluLub	Stock item	30 m coils
19200	Ti-White	On request	30 m coils
19205	Blue	On request	30 m coils

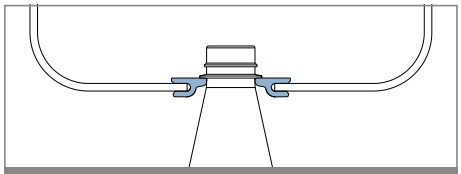

Example of application

1062

Guida collo / *Neck guide / Nackenführung*

Delivery: Easy | Standard | Fit on 1.8 - 2 mm

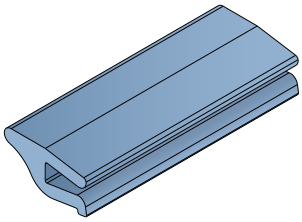

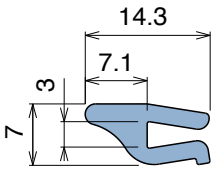

Article-Nr.	Material	Availability	Supply
106200B	BluLub	Stock item	30 m coils
106200	Ti-White	On request	30 m coils
106205	Blue	On request	30 m coils

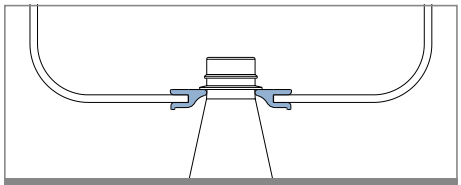

Example of application

1072

Guida collo / *Neck guide / Nackenführung*

Delivery: Easy | Standard | Fit on 1.8 - 2 mm

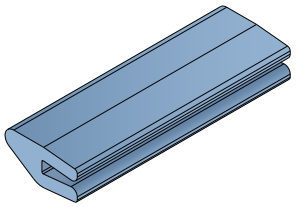

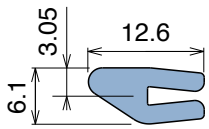

Article-Nr.	Material	Availability	Supply
107200B	BluLub	Stock item	30 m coils
107200	Ti-White	On request	30 m coils
107205	Blue	On request	30 m coils

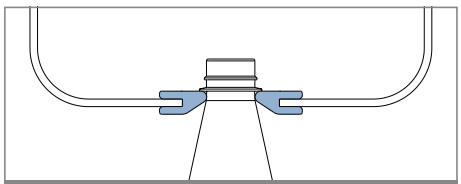

Example of application

1073

Guida collo / *Neck guide / Nackenführung*

Delivery: Easy Standard | Fit on 1.8 - 2 mm

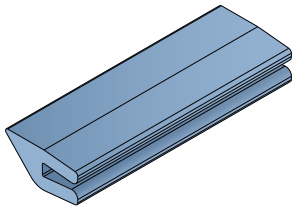

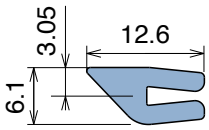

Article-Nr.	Material	Availability	Supply
107300B	BluLub	Stock item	30 m coils
107300	Ti-White	On request	30 m coils
107305	Blue	On request	30 m coils

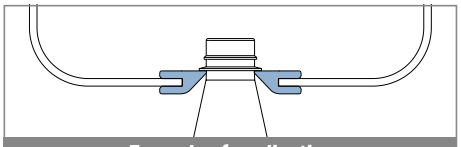
Example of application

NEW 1076

Guida collo / *Neck guide / Nackenführung*

Delivery: Easy Standard | Fit on 1.8 - 2 mm

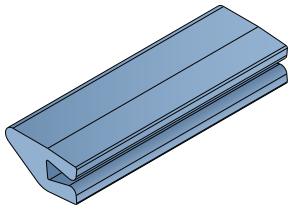

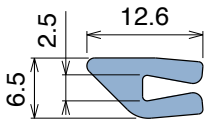

Article-Nr.	Material	Availability	Supply
107600B	BluLub	Stock item	30 m coils
107600	Ti-White	On request	30 m coils
107605	Blue	On request	30 m coils

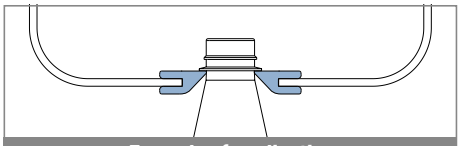
Example of application

1037

Guida collo / *Neck guide / Nackenführung*

Delivery: Easy Standard | Fit on 3 mm

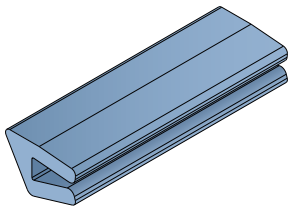

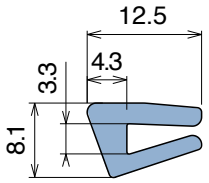

Article-Nr.	Material	Availability	Supply
103700B	BluLub	Stock item	30 m coils
103700	Ti-White	On request	30 m coils
103705	Blue	On request	30 m coils

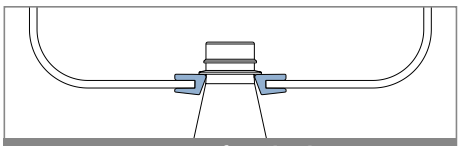
Example of application

171

Guida collo / *Neck guide / Nackenführung*

Delivery: Easy Standard | Fit on 3 mm

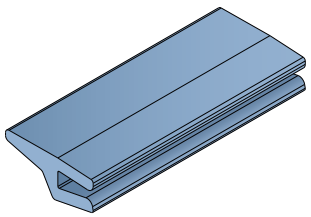

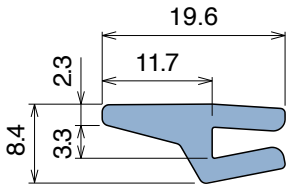

Article-Nr.	Material	Availability	Supply
17100B	BluLub	Stock item	30 m coils
17100	Ti-White	On request	30 m coils
17105	Blue	On request	30 m coils

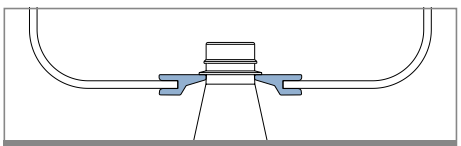
Example of application

172

Guida collo / *Neck guide / Nackenführung*

Delivery: Easy Standard | Fit on 3 mm

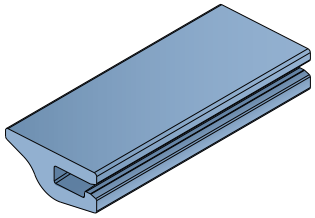

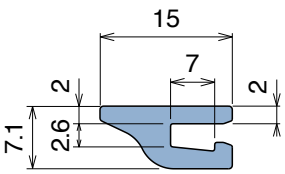

Article-Nr.	Material	Availability	Supply
17200B	BluLub	Stock item	30 m coils
17200	Ti-White	On request	30 m coils
17205	Blue	On request	30 m coils

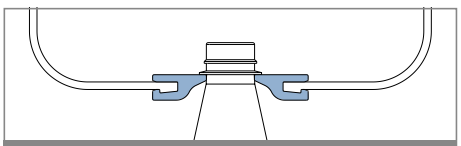
Example of application

Oadby Core product range

Oadby Available from stock in Leicester | Easy Available from stock in Italy | Standard Produced to order in Italy

131

Profilo guida bottiglia / *Plastic rail for bottle guide* / *Flaschenführungs Profil*

Delivery: Easy Standard

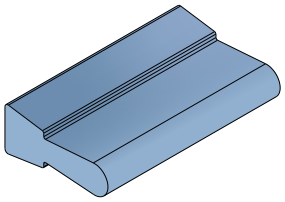

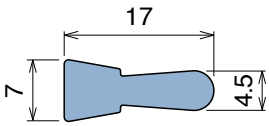

TYPE **A**

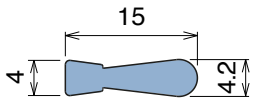

TYPE **B**

Article-Nr.	Type	Material	Availability	Supply
13101B	A	BluLub	Stock item	30 m coils
13102B	B	BluLub	Stock item	30 m coils
13106	A	Ti-White	On request	30 m coils
13107	B	Ti-White	On request	30 m coils
13108	A	Blue	On request	30 m coils
13109	B	Blue	On request	30 m coils
13101	A	Grey	Stock item	30 m coils
13102	B	Grey	Stock item	30 m coils

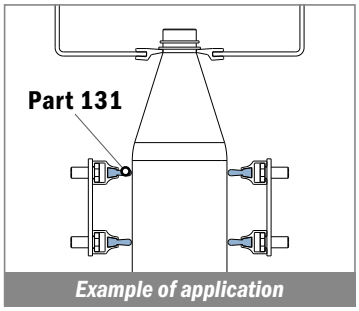

Example of application

130

Profilo in alluminio / *Aluminum rail* / *Aluminium Profil*

Delivery: Easy Standard

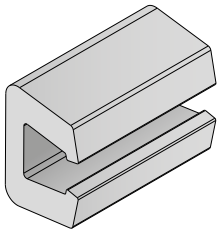

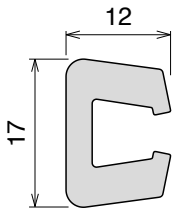

TYPE **A**

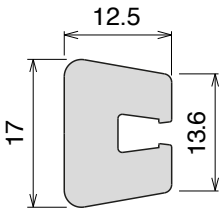

TYPE **B**

Article-Nr.	Type	Availability	Supply
13001C	A	Stock item	3 m bars
13001	A	On request	6 m bars
13002C	B	On request	3 m bars

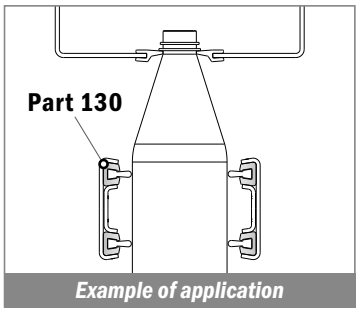

Example of application

188

Profilo in alluminio / *Aluminum rail* / *Aluminium Profil*

Delivery: Easy Standard

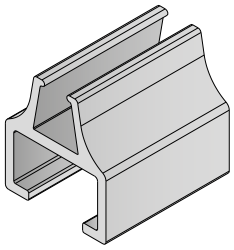

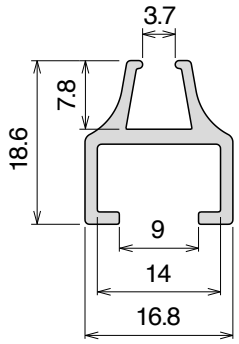

Article-Nr.	Availability	Supply
18801C	Stock item	3 m bars
18801	Stock item	6 m bars

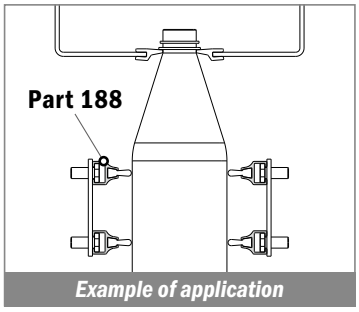

Example of application

Used with
Part 362 Pag 493
and **Part 1097** Pag 510

Materiale / *Material / Materialien:*
Poliammide rinforzato
Polyamide reinforced
Verstärktes Polyamid

113 Pattino guida catena, centrale / *Central wear strip shoe / Zentraler Einlaufschuh*

Delivery: Easy | Standard — **Used with Part 112** Pag 373

Article-Nr.	Colour	Availability
11301	Black	On request

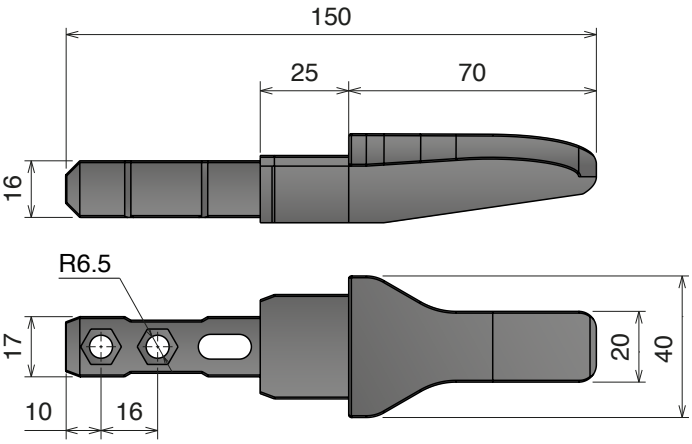

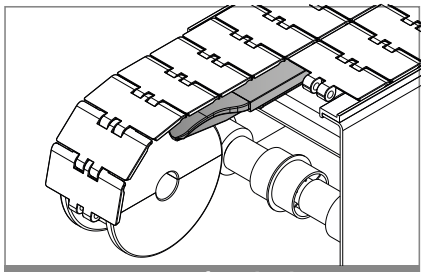

Example of application

CON NERVATURA / WITH NOSE / MIT NASE

Article-Nr.	Colour	Availability
11302	Black	On request

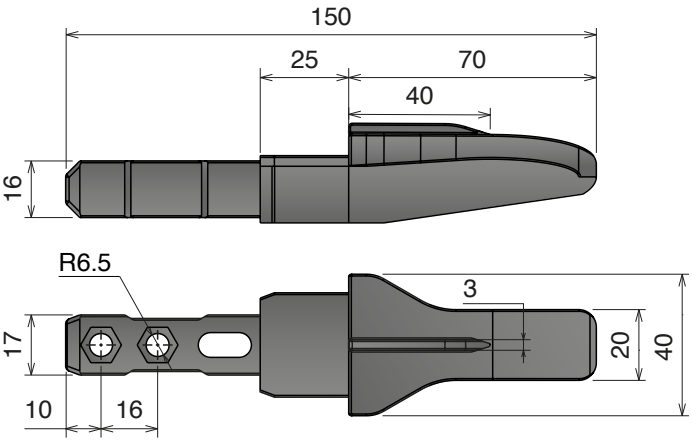

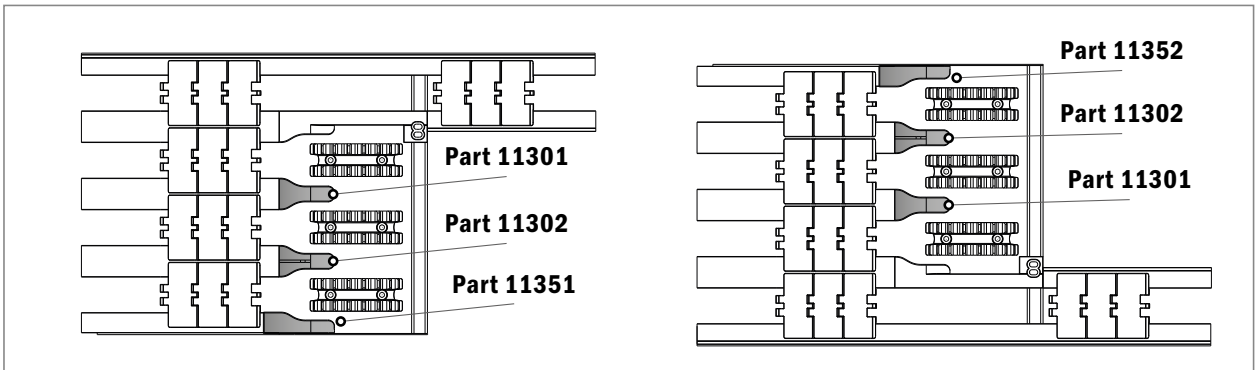

Example of application

Core product range
Available from stock in Leicester
Easy Available from stock in Italy
Standard Produced to order in Italy

Movex®

NEW

113 Pattino guida catena, laterale / *Lateral wear strip shoe* / *Seitlicher Einlaufschuh*

Delivery: Easy Standard

Article-Nr.	Colour	Availability
11351	Black	On request

VERSION **LEFT**

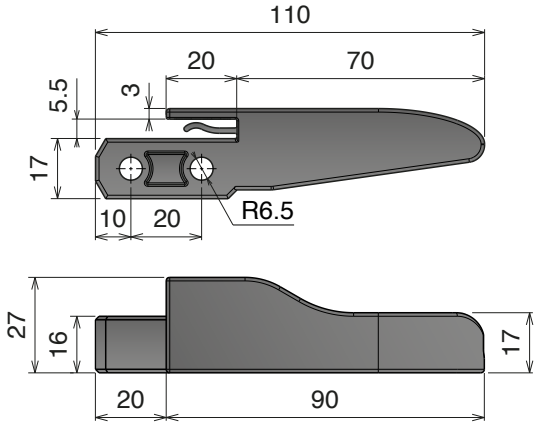

VERSION **RIGHT**

Article-Nr.	Colour	Availability
11352	Black	On request

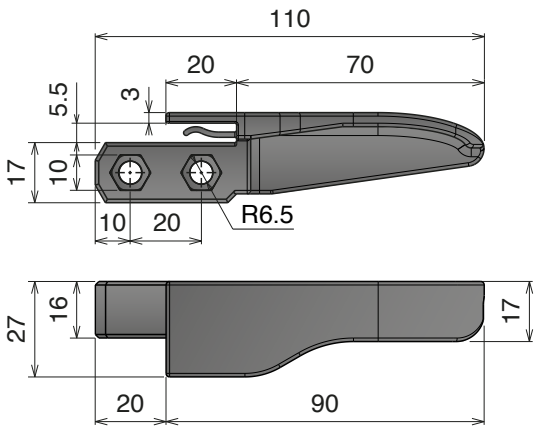

114 Blocchetto fissaggio / *Fixing clamp* / *Fixierblock*

Delivery: Easy Standard — Used with Part **112** Pag 373

	Article-Nr.	A	B	C	Colour	Availability
Oadby	11401	10	6,2	4,5	Black	On request
Oadby	11402	13	8,2	6	Black	On request

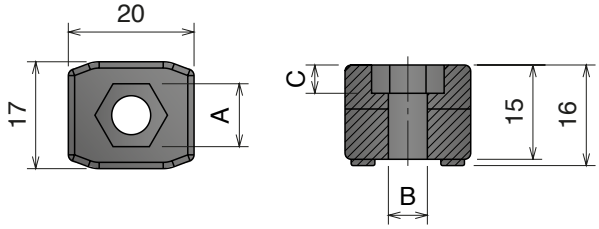

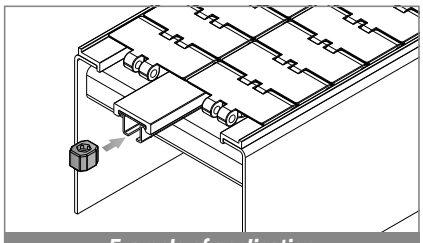

Example of application

Materiale / *Material / Materialien:*
Poliammide rinforzato
Polyamide reinforced
Verstärktes Polyamid

NEW **116** **Pattino guida catena, laterale / *Side transfer guide shoe / Seitlicher Tranferschuh***

Delivery: Easy Standard — Used with Part 112 Pag 373

Article-Nr.	Colour	Availability
11651	Black	On request

VERSION **LEFT**

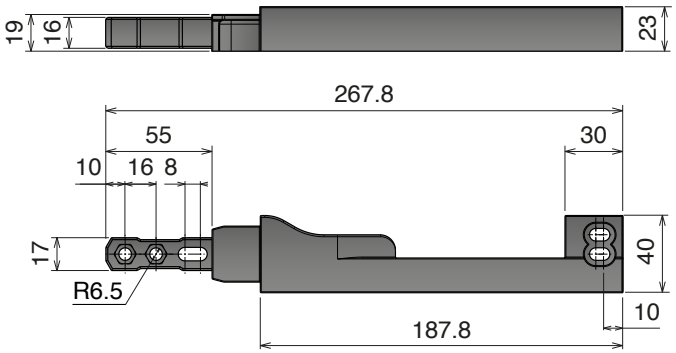

VERSION **RIGHT**

Article-Nr.	Colour	Availability
11652	Black	On request

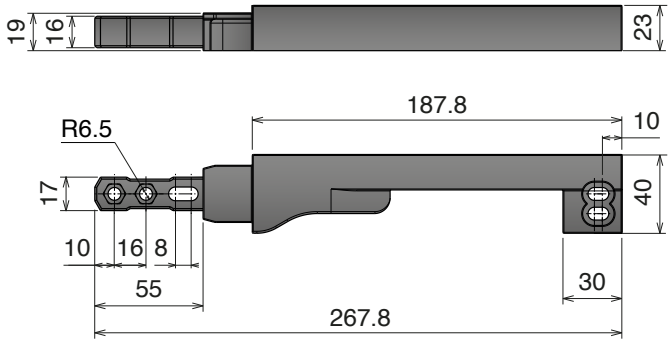

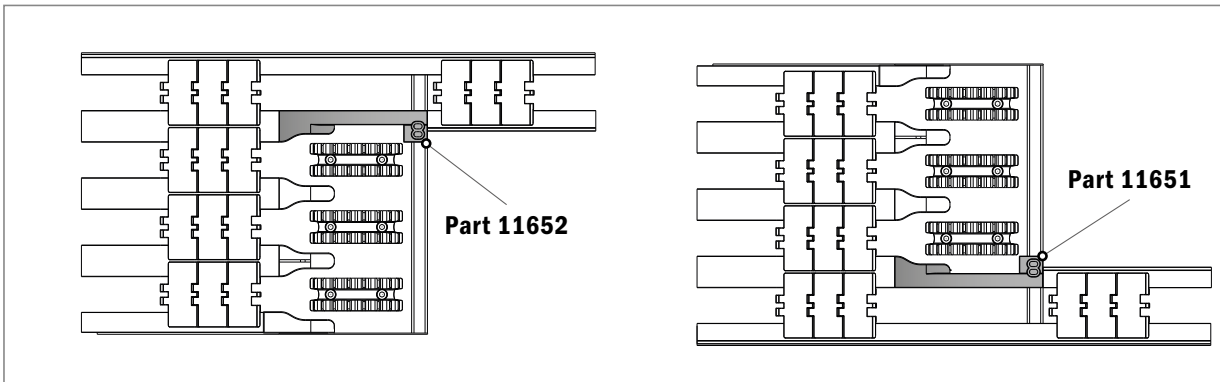

Example of application

Oadby Core product range
Oadby Available from stock in Leicester
Easy Available from stock in Italy
Standard Produced to order in Italy

Movex®

116 Pattino guida catena, laterale / *Side transfer guide shoe* / *Seitlicher Tranferschuh*

Delivery: Easy | Standard — **Used with Part 112** Pag 373

Article-Nr.	Colour	Availability
11601	Black	On request

VERSION **LEFT**

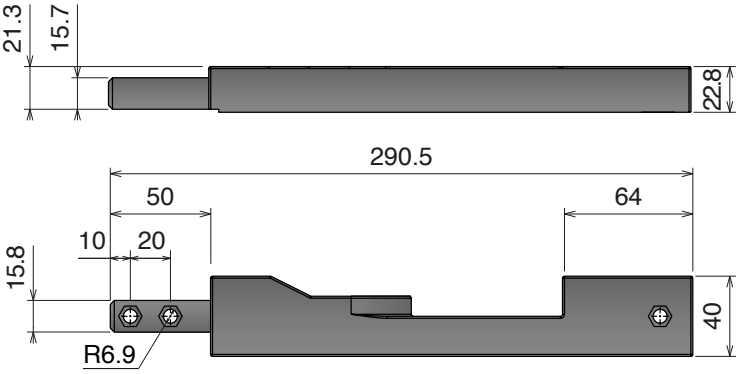

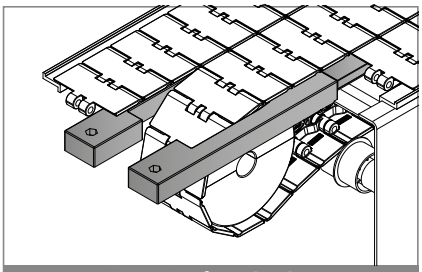
Example of application

VERSION **RIGHT**

Article-Nr.	Colour	Availability
11602	Black	On request

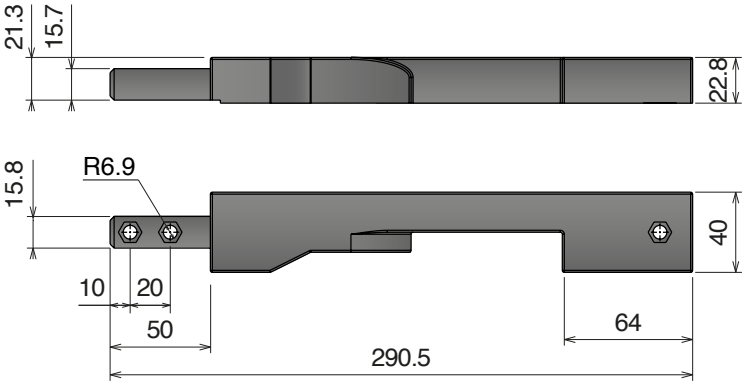

115 Blocchetto giunzione / *Connecting element* / *Verbindungselement*

Delivery: Easy | Standard — **Used with Part 112** Pag 373

Article-Nr.	A	B	C	Colour	Availability
11501	10	6,2	4,5	Black	On request
11502	13	8,2	6	Black	On request

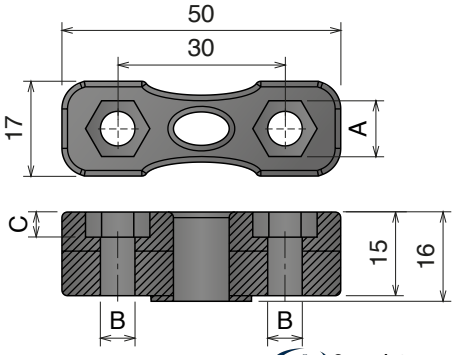

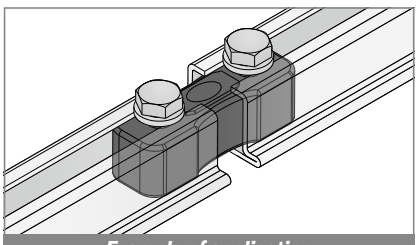
Example of application

434

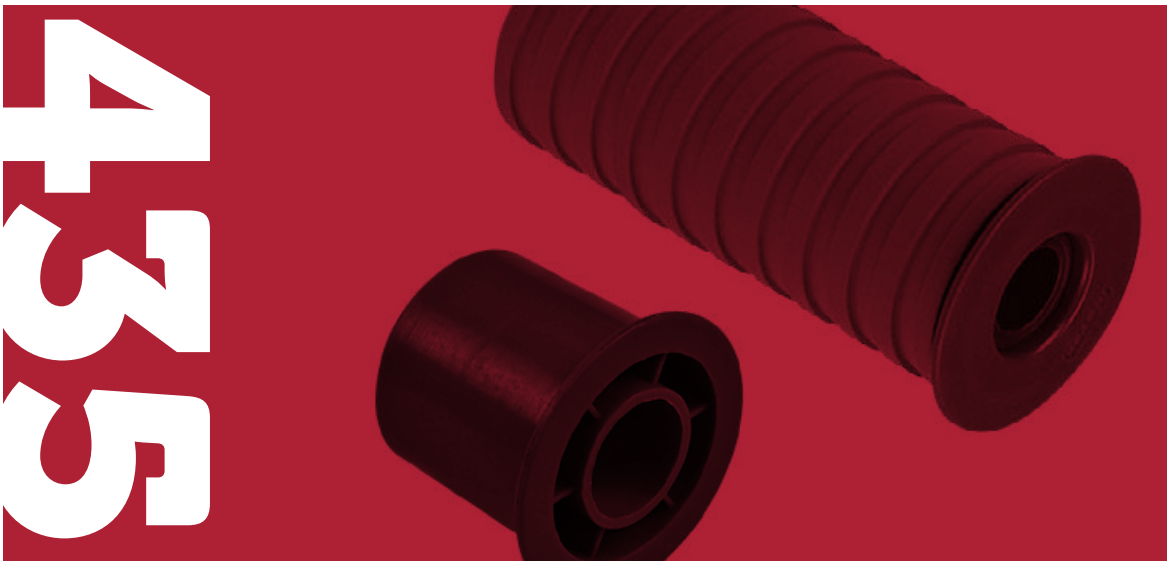

219 - Ø40

Pag 436

220 - Ø47

Pag 436

201 - Ø50

Pag 437

203 - Ø57

Pag 437

202 - Ø60

Pag 438

204 - Ø67

Pag 438

222 - Ø40

Pag 439

223 - Ø47

Pag 439

224 - Ø50

Pag 440

225 - Ø57

Pag 440

226 - Ø60

Pag 441

227 - Ø67

Pag 441

208

Pag 442

209

Pag 442

210

Pag 442

211

Pag 442

232

Pag 443

236

Pag 443

237

Pag 443

207

Pag 444

233

Pag 444

213

Pag 444

221

Pag 445

215

Pag 445

217

Pag 445

218

Pag 446

230

Pag 446

231

Pag 446

Materiale / *Material* / *Materialien:*
Rullino: Polietilene (PE) / *Polyethylene (PE)* / *Polyäthylen (PE)*
Gomma: TPR / Rubber: TPR / Gummi: TPR

219

Rullini di ritorno D=40 mm
Return roller D=40 mm / Rückführrolle D=40 mm

WATERTIGHT

Delivery: Easy Standard

Part	Article-Nr.	L	ØA
219	21951	41	16
219	21952	41	18
219	21953	41	20
219	21901	82,5	16
219	21902	82,5	18
219	21903	82,5	20
219	21911	84,5	16
219	21912	84,5	18
219	21913	84,5	20
219	21964	116	12
219	21961	116	16
219	21962	116	18
219	21963	116	20

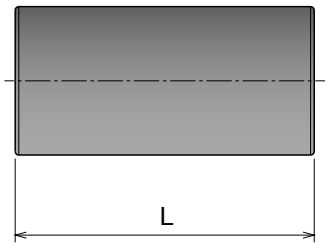

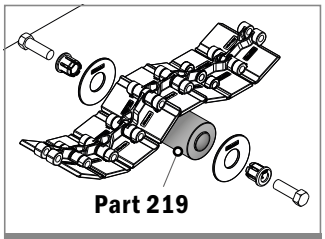

Example of application

220

Rullini di ritorno gommati D=47 mm
Return roller with rubber D=47 mm / Rückführrolle gummiert D=47 mm

WATERTIGHT

Delivery: Easy Standard

Part	Article-Nr.	L	ØA
220	22051	41	16
220	22052	41	18
220	22053	41	20
220	22001	82,5	16
220	22002	82,5	18
220	22003	82,5	20
220	22011	84,5	16
220	22012	84,5	18
220	22013	84,5	20
220	22064	116	12
220	22061	116	16
220	22062	116	18
220	22063	116	20

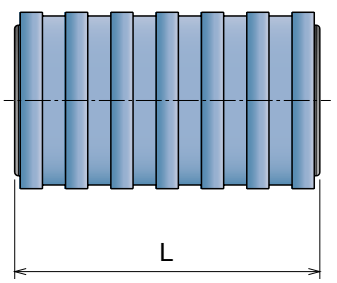

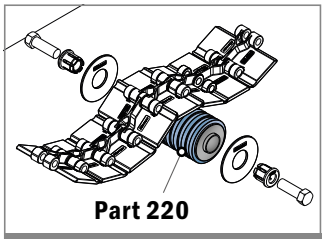

Example of application

Core product range
Available from stock in Leicester
Easy Available from stock in Italy
Standard Produced to order in Italy

Movex

201

Rullini di ritorno D=50 mm
Return roller D=50 mm / Rückführrolle D=50 mm

WATERTIGHT

Delivery: Easy Standard

Part	Article-Nr.	L	ØA
201	20151	41	16
201	20152	41	18
201	20153	41	20
201	20101	82,5	16
201	20102	82,5	18
201	20103	82,5	20
201	20111	84,5	16
201	20112	84,5	18
201	20113	84,5	20
201	20164	116	12
201	20161	116	16
201	20162	116	18
201	20163	116	20

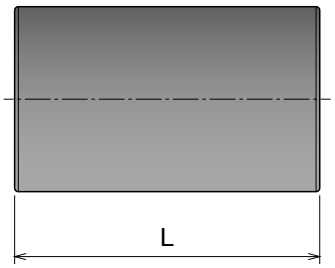

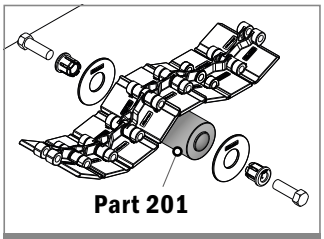

Example of application

203

Rullini di ritorno gommati D=57 mm
Return roller with rubber D=57 mm / Rückführrolle gummiert D=57 mm

WATERTIGHT

Delivery: Easy Standard

Part	Article-Nr.	L	ØA
203	20351	41	16
203	20352	41	18
203	20353	41	20
203	20301	82,5	16
203	20302	82,5	18
203	20303	82,5	20
203	20311	84,5	16
203	20312	84,5	18
203	20313	84,5	20
203	20364	116	12
203	20361	116	16
203	20362	116	18
203	20363	116	20

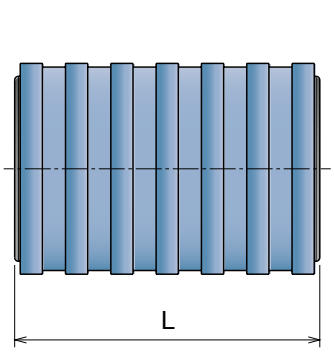

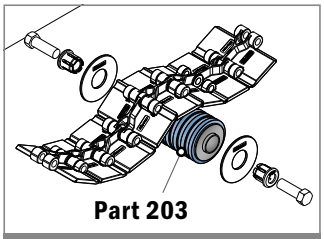

Example of application

Materiale / *Material* / *Materialien:*
Rullino: Polietilene (PE) / *Polyethylene (PE) / Polyäthylen (PE)*
Gomma: TPR / Rubber: TPR / Gummi: TPR

202

Rullini di ritorno D=60 mm
Return roller D=60 mm / Rückführrolle D=60 mm

RANGE EXTENSION | WATERTIGHT

Delivery: Easy | Standard

Part	Article-Nr.	L	ØA
202	20251	41	16
202	20252	41	18
202	20253	41	20
202	20201	82,5	16
202	20202	82,5	18
202	20203	82,5	20
202	20211	84,5	16
202	20212	84,5	18
202	20213	84,5	20
202	20264	116	12
202	20261	116	16
202	20262	116	18
202	20263	116	20

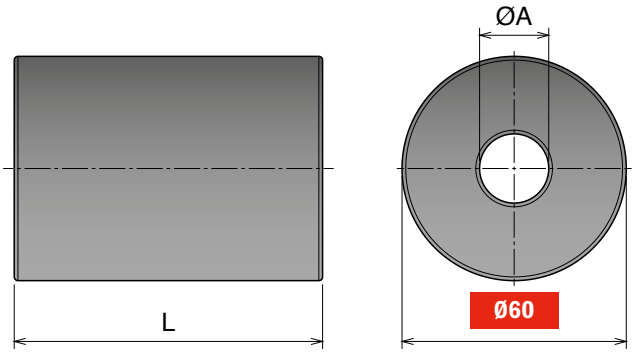

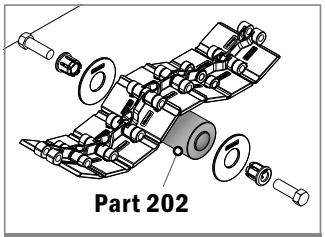

Example of application

204

Rullini di ritorno gommati D=67 mm
Return roller with rubber D=67 mm / Rückführrolle gummiert D=67 mm

RANGE EXTENSION | WATERTIGHT

Delivery: Easy | Standard

Part	Article-Nr.	L	ØA
204	20451	41	16
204	20452	41	18
204	20453	41	20
204	20401	82,5	16
204	20402	82,5	18
204	20403	82,5	20
204	20411	84,5	16
204	20412	84,5	18
204	20413	84,5	20
204	20464	116	12
204	20461	116	16
204	20462	116	18
204	20463	116	20

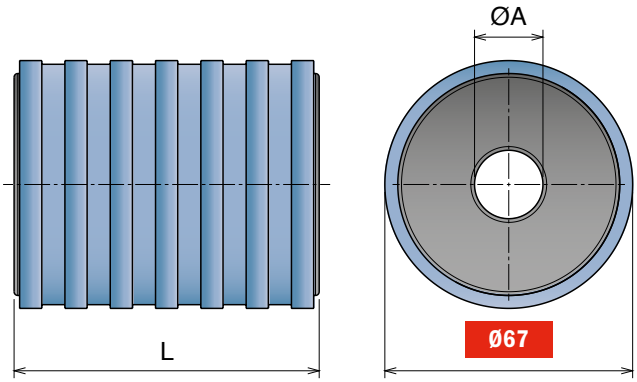

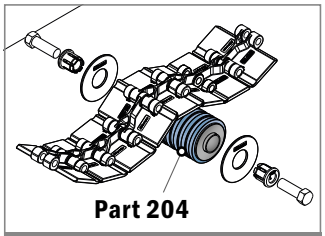

Example of application

Core product range
Available from stock in Leicester | Easy Available from stock in Italy | Standard Produced to order in Italy

Movex®

222 Rullini di ritorno flangiati D=40 mm

Return roller with flange D=40 mm / Rückführrolle mit Seitenscheibe D=40 mm

WATERTIGHT

Delivery: Easy Standard

Part	Article-Nr.	L	ØA
222	22251	43	16
222	22252	43	18
222	22253	43	20
222	22201	85,5	16
222	22202	85,5	18
222	22203	85,5	20
222	22211	87,5	16
222	22212	87,5	18
222	22213	87,5	20
222	22264	119	12
222	22261	119	16
222	22262	119	18
222	22263	119	20

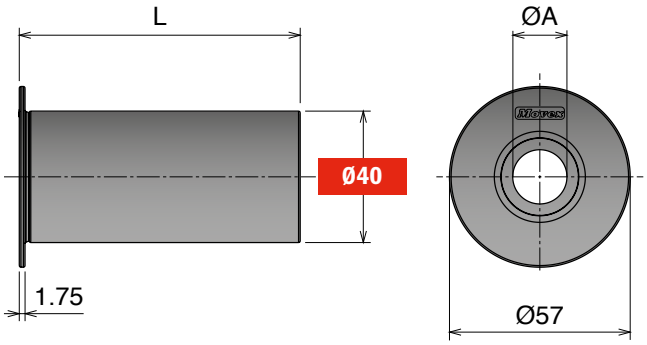

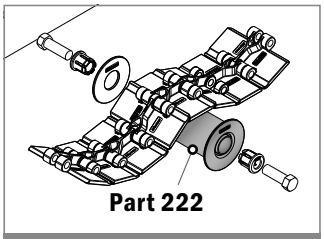

Example of application

223 Rullini di ritorno flangiati gommati D=47 mm

Return roller with flange and rubber D=47 mm / Rückführrolle gummiert mit Seitenscheibe D=47 mm

WATERTIGHT

Delivery: Easy Standard

Part	Article-Nr.	L	ØA
223	22351	43	16
223	22352	43	18
223	22353	43	20
223	22301	85,5	16
223	22302	85,5	18
223	22303	85,5	20
223	22311	87,5	16
223	22312	87,5	18
223	22313	87,5	20
223	22364	119	12
223	22361	119	16
223	22362	119	18
223	22363	119	20

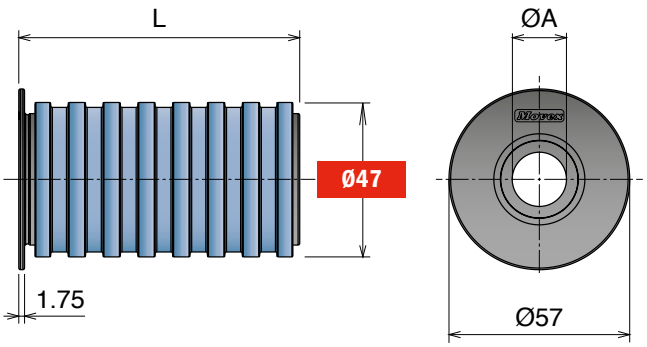

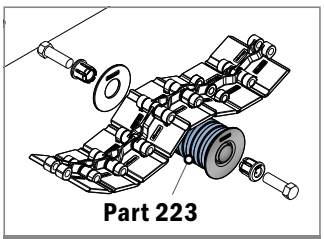

Example of application

Materiale / *Material* / *Materialien:*
Rullino: Polietilene (PE) / *Polyethylene (PE) / Polyäthylen (PE)*
Gomma: TPR / Rubber: TPR / Gummi: TPR

224

Rullini di ritorno flangiati D=50 mm
Return roller with flange D=50 mm / Rückführrolle mit Seitenscheibe D=50 mm

WATERTIGHT

Delivery: Easy Standard

Part	Article-Nr.	L	ØA
224	22451	43	16
224	22452	43	18
224	22453	43	20
224	22401	85,5	16
224	22402	85,5	18
224	22403	85,5	20
224	22411	87,5	16
224	22412	87,5	18
224	22413	87,5	20
224	22464	119	12
224	22461	119	16
224	22462	119	18
224	22463	119	20

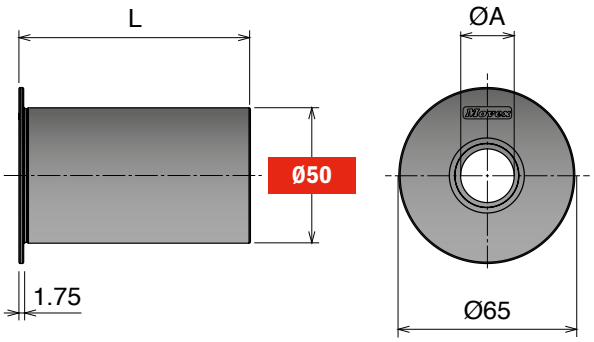

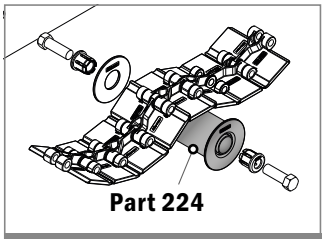

Example of application

225

Rullini di ritorno flangiati gommati D=57 mm
Return roller with flange and rubber D=57 mm / Rückführrolle gummiert mit Seitenscheibe D=57 mm

WATERTIGHT

Delivery: Easy Standard

Part	Article-Nr.	L	ØA
225	22551	43	16
225	22552	43	18
225	22553	43	20
225	22501	85,5	16
225	22502	85,5	18
225	22503	85,5	20
225	22511	87,5	16
225	22512	87,5	18
225	22513	87,5	20
225	22564	119	12
225	22561	119	16
225	22562	119	18
225	22563	119	20

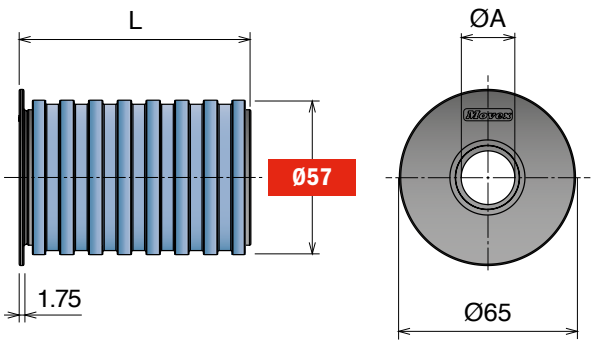

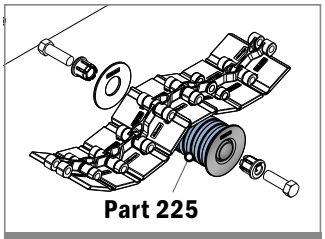

Example of application

Oadby Core product range
Oadby Available from stock in Leicester
Easy Available from stock in Italy
Standard Produced to order in Italy

Movex

226

Rullini di ritorno flangiati D=60 mm
Return roller with flange D=60 mm / Rückführrolle mit Seitenscheibe D=60 mm

WATERTIGHT

Delivery: Easy Standard

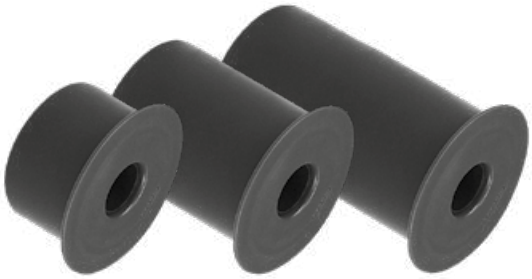

Part	Article-Nr.	L	ØA
226	22651	43	16
226	22652	43	18
226	22653	43	20
226	22601	85,5	16
226	22602	85,5	18
226	22603	85,5	20
226	22611	87,5	16
226	22612	87,5	18
226	22613	87,5	20
226	22664	119	12
226	22661	119	16
226	22662	119	18
226	22663	119	20

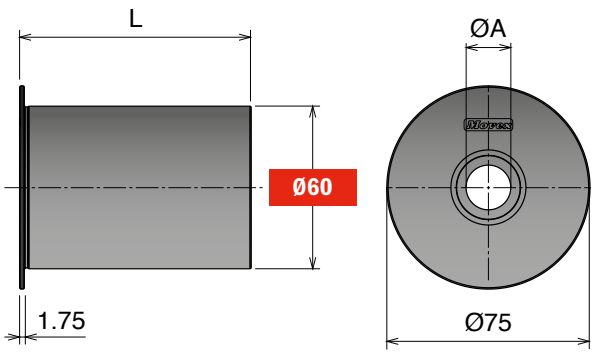

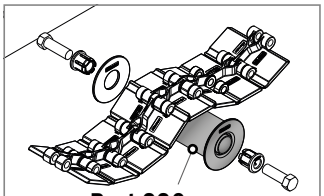

Example of application

227

Rullini di ritorno flangiati gommati D=67 mm
Return roller with flange and rubber D=67 mm / Rückführrolle gummiert mit Seitenscheibe D=67 mm

WATERTIGHT

Delivery: Easy Standard

Part	Article-Nr.	L	ØA
227	22751	43	16
227	22752	43	18
227	22753	43	20
227	22701	85,5	16
227	22702	85,5	18
227	22703	85,5	20
227	22711	87,5	16
227	22712	87,5	18
227	22713	87,5	20
227	22764	119	12
227	22761	119	16
227	22762	119	18
227	22763	119	20

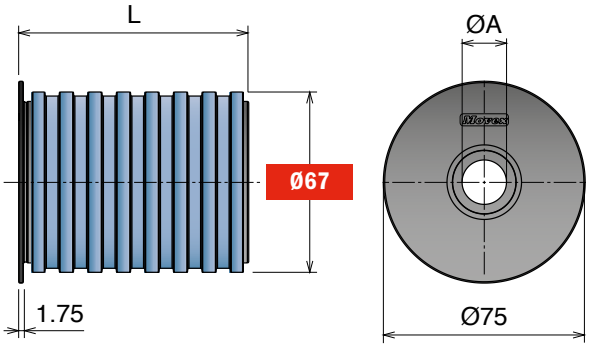

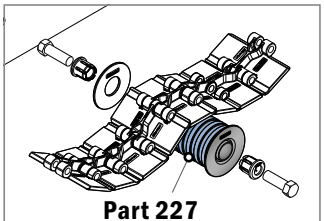

Example of application

Materiale / *Material* / *Materialien:*
Polietilene (PE) / *Polyethylene (PE)* / *Polyäthylen (PE)*

208 Rullini di ritorno flangiati D=42.5 mm
Return roller with flange D=42.5 mm / Rückführrolle mit Seitenscheibe D=42.5 mm

Delivery: Easy Standard

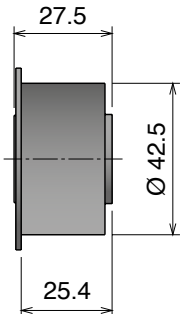

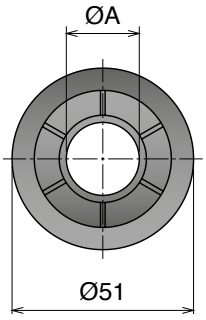

Part	Article-Nr.	ØA
208	20801	16
208	20802	18
208	20803	20

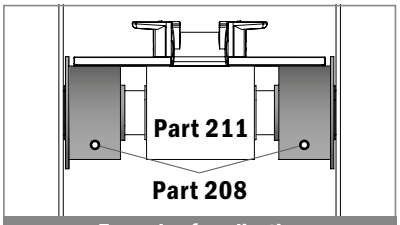

Example of application

209 Rullini di ritorno flangiati D=43 mm
Return roller with flange D=43 mm / Rückführrolle mit Seitenscheibe D=43 mm

Delivery: Easy Standard

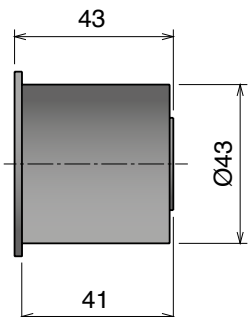

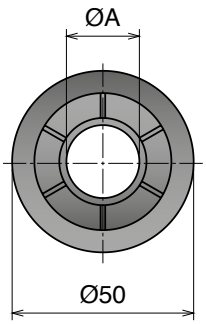

Part	Article-Nr.	ØA
209	20901	16
209	20902	18
209	20903	20

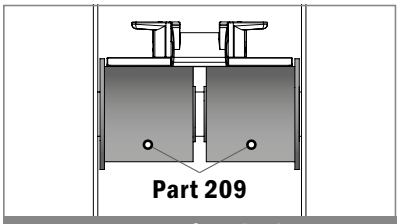

Example of application

210 Rullini doppio di ritorno
Double return roller / Doppel- Rücklaufrolle

Delivery: Easy Standard

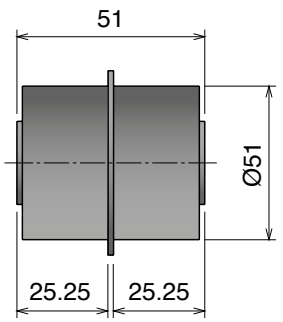

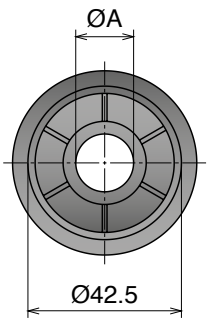

Part	Article-Nr.	ØA
210	21001	16
210	21002	18
210	21003	20

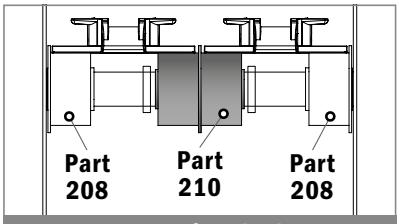

Example of application

211 Rullini di ritorno D=42.5 mm
Return roller D=42.5 mm / Rückführrolle D=42.5 mm

Delivery: Easy Standard

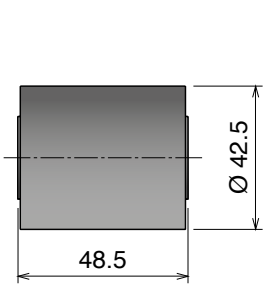

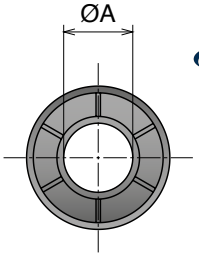

Part	Article-Nr.	ØA
211	21101	16
211	21102	18
211	21103	20

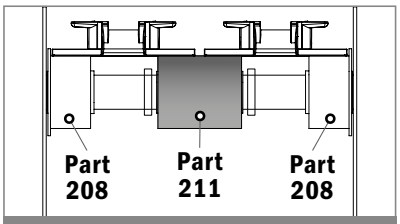

Example of application

Oadby Core product range
Oadby Available from stock in Leicester
Easy Available from stock in Italy
Standard Produced to order in Italy

Movex®

232 Rullini di ritorno flangiati Ø68
Return roller with flange Ø68 / Rückführrolle mit Seitenscheibe Ø68

Delivery: Easy Standard — Max recommended tightening torque: 0,3 N mt

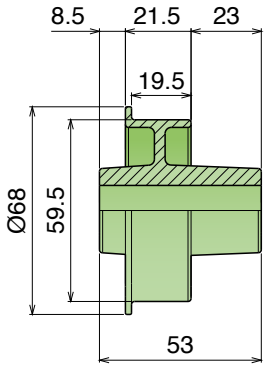

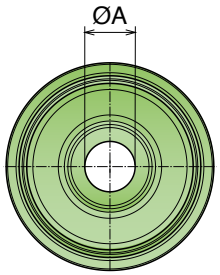

Part	Article-Nr.	ØA
232	23201	15
232	23202	16
232	23203	18
232	23204	20

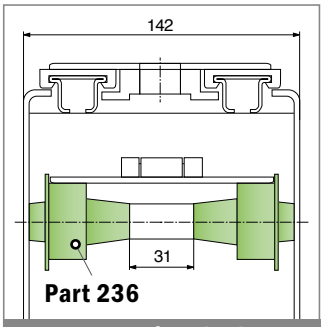

Example of application

NEW

236 Rullini di ritorno con scanalatura
Return roller with groove / Rückfürrolle mit Nut

Delivery: Easy Standard

Machined
High Strength

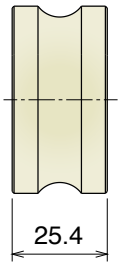

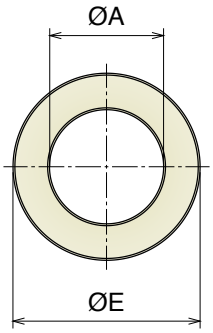

Part	Article-Nr.	ØE	ØA
236	23601	50	25
236	23602	50	30
236	23603	60	25
236	23604	60	30
236	23605	70	25
236	23606	70	30

Generally used with
553 FLEXTOP modular belt

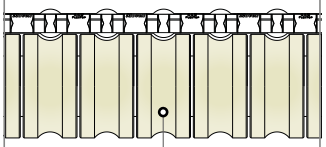

Example of application

NEW

237 Rullini di ritorno con scanalatura e O-ring
Return roller with groove and O-ring / Rückfürrolle mit Nut und O-ring

Delivery: Easy Standard

Machined
High Strength

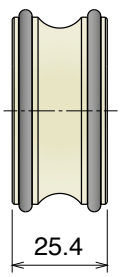

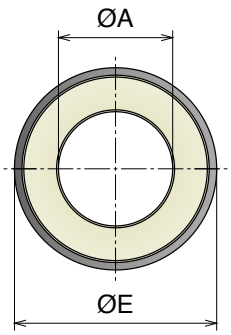

Part	Article-Nr.	ØE	ØA
237	23701	53	25
237	23702	53	30
237	23703	63	25
237	23704	63	30
237	23705	73	25
237	23706	73	30

Generally used with
553 FLEXTOP modular belt

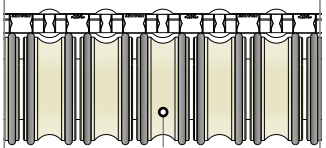

Example of application

Materiale / *Material / Materialien:*
Poliammide (PA) / *Polyamide (PA) / Polyamid (PA)*

207 Flangia
Flange / Seitenscheibe

Delivery: Easy Standard

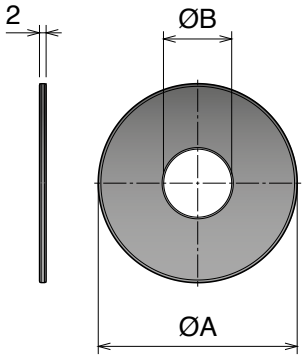

	Part	Article-Nr.	ØA	ØB
	207	20719	50	12
	207	20712	50	16
	207	20713	50	18
	207	20714	50	20
	207	20720	60	12
	207	20701	60	16
	207	20702	60	18
	207	20703	60	20
	207	20721	70	12
	207	20704	70	16
	207	20705	70	18
Oadby	207	20706	70	20
	207	20722	80	12
	207	20707	80	16
	207	20708	80	18
	207	20709	80	20

233 Flangia
Flange / Seitenscheib

Delivery: Easy Standard

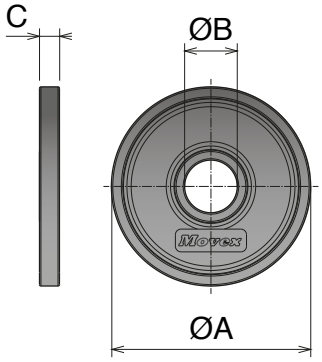

Part	Article-Nr.	ØA	ØB	C
233	23303	25,5	20	7,25
233	23304	60	20	7,25
233	23305	70	16	7
233	23307	70	20	7
233	23302	90	20	5

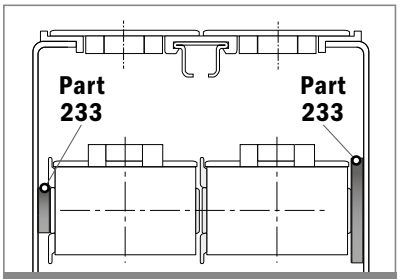

Example of application

213 Pattino oscillante innesto rapido
Snap-on sliding shoe / Rücklaufschuh, aufsteckbar

Delivery: Easy Standard

	Part	Article-Nr.	ØA
	213	21301	16
	213	21302	18
Oadby	213	21303	20

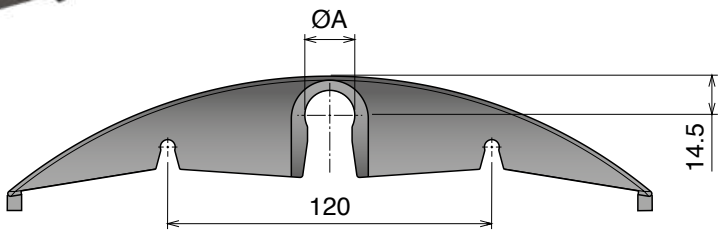

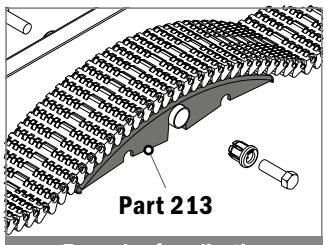

Example of application

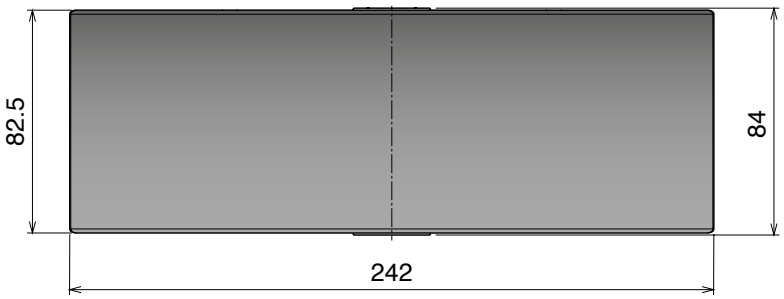

Oadby Core product range
Oadby Available from stock in Leicester
Easy Available from stock in Italy
Standard Produced to order in Italy

Movex

Materiale / *Material* / *Materialien:*
Morsetti: Poliammide/*Clamps: Polyamide/Klemme: Polyamid*
Viti: Acciaio inox/*Screws: Stainless steel/Schraube: Edelstahl*
Dadi: Ottone nichelato/*Nuts: Nickel plated brass/Mutter: Messing vernickelt*

221

Collare di riferimento con chiavetta
Split collar with keyway / geteilter Stellring mit Nut

Delivery: Easy | Standard — Max recommended tightening torque: 0,3 N mt

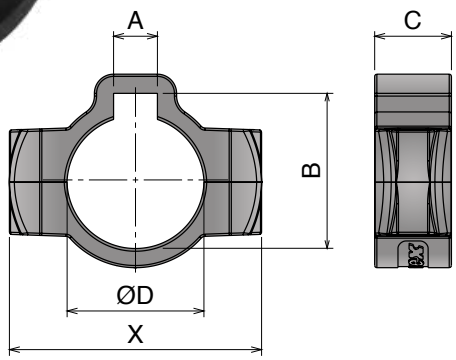

Part	Article-Nr.	A	B	C	ØD	X
221	22101	8	28,3	14	25	46
221	22102	8	33,3	16	30	51
221	22103	10	38,3	16	35	57
221	22104	12	43,3	18	40	64
221	22101Y	6,85	28,3	14	1”	46
221	22102Y	6,85	34,7	16	1,25”	52
221	22104Y	10,025	42,4	18	1,5”	64

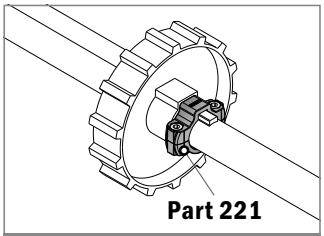

Example of application

215

Collare di riferimento
Split collar / geteilter Stellring

Delivery: Easy | Standard — Max recommended tightening torque: 0,3 N mt

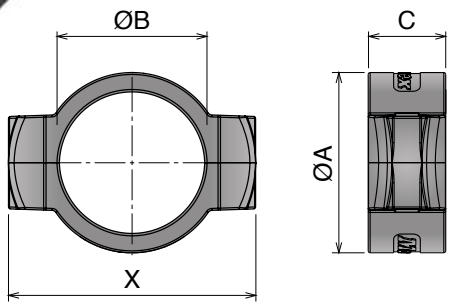

Part	Article-Nr.	ØA	ØB	C	X
215	21501	20	12	12	29,5
215	21502	22	14	12	31,5
215	21509	24	16	12	37
215	21503	26	18	14	42
215	21504	28	20	14	42
215	21505	32	25	14	46
215	21506	38	30	16	51
215	21507	43	35	16	57
215	21508	48	40	16	64
215	21501Y	20	0,5”	12	29,5
215	21503Y	26	0,75”	14	42
215	21505Y	32	1”	14	46
215	21506Y	38	1,25”	16	52
215	21508Y	48	1,5”	18	64

217

Collare di riferimento
Split collar / geteilter Stellring

Delivery: Easy | Standard — Max recommended tightening torque: 0,3 N mt

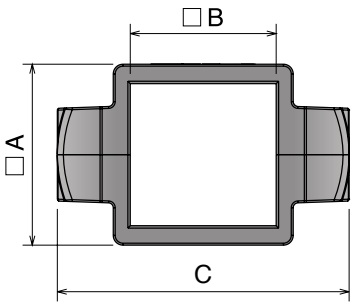

Part	Article-Nr.	□A	□B	C
217	21701	33	25	55
217	21702	37	30	60
217	21703	47	40	70
217	21704	59	50	81
217	21705	69	60	92

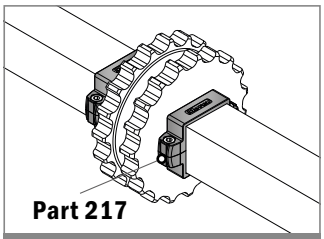

Example of application

Materiale / *Material* / *Materialien:*
Part 218 Acciaio inox / *Stainless steel* / *Edelstahl*
Part 230-231 Poliammide (PA) / *Polyamide (PA)* / *Polyamid (PA)*

NEW

218 Collare di riferimento in acciaio
Stainless steel split collar / Geteilter Stellring, Edelstahl

Stainless Steel | AISI 304

Delivery: Easy | Standard

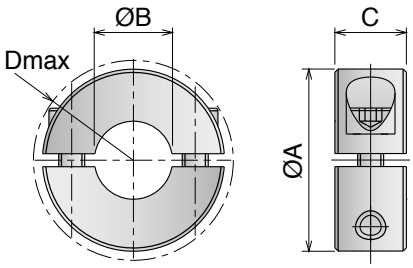

Part	Article-Nr.	ØA	ØB	C	Dmax
218	21801	18	8	9	22,4
218	21802	24	10	9	26
218	21803	28	12	11	31,8
218	21804	34	16	13	39,4
218	21805	36	18	13	41,1
218	21806	40	20	15	46,4
218	21807	45	25	15	50,8
218	21808	54	30	15	58,6
218	21809	58	35	15	62
218	21810	60	40	15	65
218	21801Y	11/16	5/16	5/16	0.88
218	21802Y	7/8	3/8	11/32	1.02
218	21803Y	15/16	7/16	3/8	1.25
218	21804Y	1-1/8	1/2	13/32	1.25
218	21805Y	1-5/16	5/8	7/16	1.55
218	21806Y	1-1/2	3/4	1/2	1.83
218	21807Y	1-3/4	1	1/2	2.00
218	21808Y	2-1/16	1-1/4	1/2	2.31
218	21809Y	2-1/4	1-7/16	9/16	2.44
218	21810Y	2-3/8	1-1/2	9/16	2.56

230 Piastrina
Spacer / Führungsscheiben

Part	Article-Nr.
230	23001

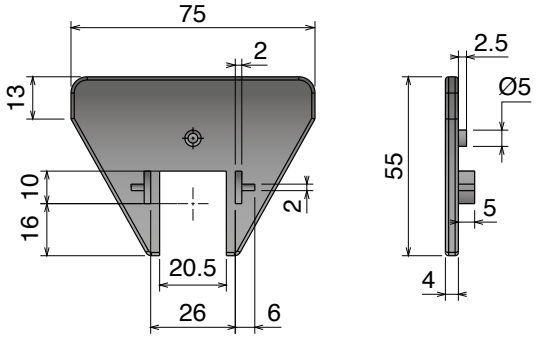

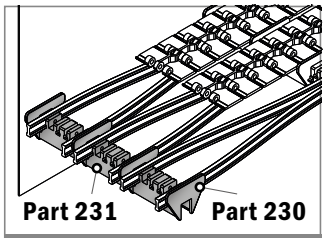

Example of application

231 Distanziale per serpentina
Spacer for serpentine / Montageblock

Part	Article-Nr.	W
231	23101	84
231	23102	88
231	23103	108
231	23104	116

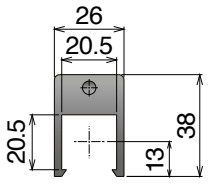

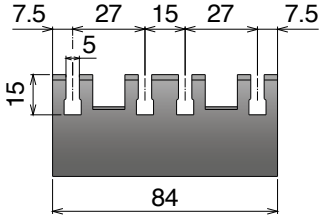

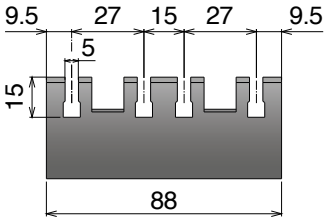

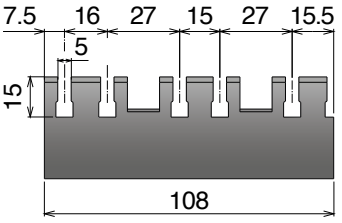

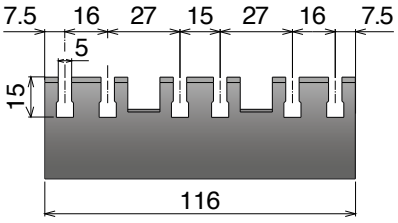

Oadby Core product range
Oadby Available from stock in Leicester
Easy Available from stock in Italy
Standard Produced to order in Italy

Movex

47

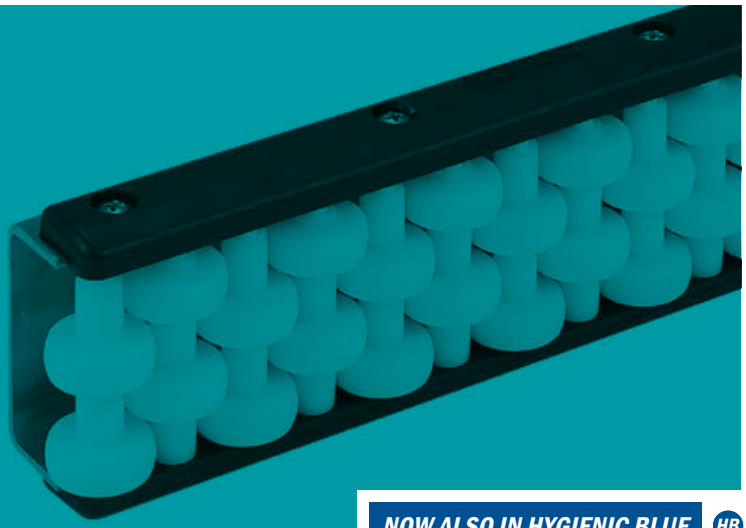

NOW ALSO IN HYGIENIC BLUE HB

301 HB Pag 450

302 HB Pag 450

305 Pag 451

306 Pag 451

307 Pag 452

308 Pag 452

309 Pag 453

310 Pag 453

311 Pag 454

312 Pag 454

321 HB Pag 455

322 Pag 455

323 Pag 455

398 HB Pag 456

398 HB Pag 456

398 Pag 457

398 Pag 458

398 Pag 459

398 Pag 460

398 Pag 461

398 Pag 462

398 Pag 463

313 HB Pag 464

314 HB Pag 464

315 Pag 465

316 Pag 465

317 HB Pag 466

317 HB Pag 466

318 Pag 467

319 Pag 467

3001 Pag 467

317 Pag 468

320 Pag 468

3007 Pag 468

3008 Pag 469

3002 Pag 469

324 HB Pag 470

325 HB Pag 470

3009 HB Pag 470

326 HB Pag 471

3013 Pag 471

3010 Pag 471

327 Pag 472

3012 Pag 472

337 HB Pag 473

338 HB Pag 473

339 HB Pag 473

328 Pag 474

329 Pag 474

330 Pag 474

390 Pag 474

392 Pag 475

393 Pag 475

336 Pag 475

394 Pag 476

341 HB Pag 476

341 HB Pag 476

3310 Pag 477

3311 Pag 477

345 Pag 477

349 Pag 478

350 Pag 478

351 Pag 478

3004 Pag 479

352 Pag 479

3005 Pag 479

347 Pag 480

348 Pag 480

346 Pag 480

356 Pag 481

357 Pag 481

3011 HB Pag 481

335 Pag 482

358 Pag 483

364 Pag 483

359 Pag 484

365 Pag 484

360 Pag 485

360 Pag 486

366 Pag 485/486

361 Pag 487

361 Pag 488

367 Pag 487/488

364-365 Pag 489

366-367 Pag 490

366 Pag 491

367 Pag 491

364 Pag 492

365 Pag 492

395 Pag 493

362 Pag 493

333 Pag 493

358/359/360 361 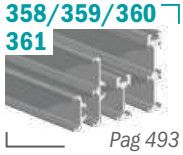 Pag 493

3014 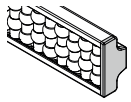 Pag 493

353 Pag 494

354 Pag 494

355 Pag 494

363 Pag 495

396 Pag 496

363 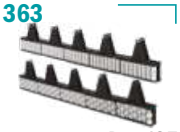 Pag 497

36399 Pag 497

199/299 Pag 498

368 Pag 499

369 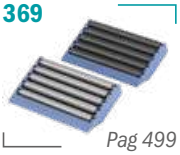 Pag 499

370 Pag 500

371 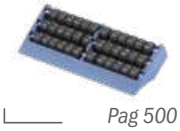 Pag 500

342 Pag 501

372 HB Pag 502

373 Pag 502

383 Pag 502

384 Pag 503

386 Pag 503

3003 Pag 504

397 Pag 504

374

Pag 505

375

Pag 505

377

Pag 506

378

Pag 506

379

Pag 507

380

Pag 507

381 HB

Pag 508

382 HB

Pag 508

376

Pag 509

376

Pag 509

376

Pag 509

391

Pag 510

1097

Pag 510

387

Pag 511

388

Pag 511

903

Pag 512

903

Pag 512

998

Pag 512

Materiale / *Material* / *Materialien:*
Supporto: PA/*Support: PA/Halter: PA*
Volantino: PA+ottone nichelato/*Knob: PA+nickel plated brass/Sterngriff: PA+ Messing vernickelt*
Tirante: Acciaio inox/*Eyebolt: Stainless steel/Augenschraube: Edelstahl*

301

Supporto laterale -piccolo-
Side bracket -small- / Geländerhalter -klein-

NOW ALSO IN HYGIENIC BLUE

Delivery: Easy Standard

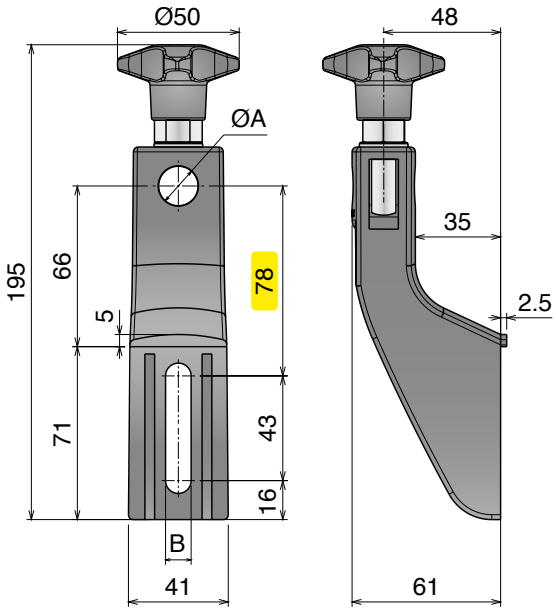

	Part	Article-Nr.	ØA	B	Colour
Oadby	301	30101	12	9	Black
Oadby	301	30105	14	9	Black
	301	30102	16	9	Black
Oadby	301	30103	12	10,5	Black
	301	30106	14	10,5	Black
	301	30104	16	10,5	Black
	301	30151	12	9	Hygienic blue
	301	30155	14	9	Hygienic blue
	301	30152	16	9	Hygienic blue
	301	30153	12	10,5	Hygienic blue
	301	30156	14	10,5	Hygienic blue
	301	30154	16	10,5	Hygienic blue

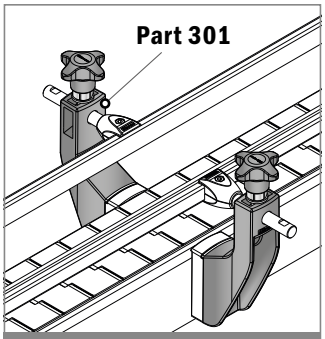

Example of application

302

Supporto laterale -piccolo- volantino alto
Side bracket -small- high knob / Geländerhalter -klein- hoher Sterngriff

NOW ALSO IN HYGIENIC BLUE

Delivery: Easy Standard

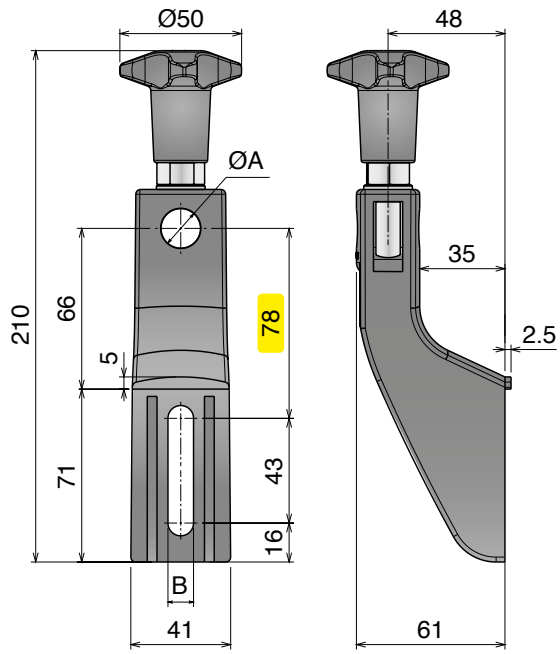

	Part	Article-Nr.	ØA	B	Colour
	302	30201	12	9	Black
	302	30205	14	9	Black
	302	30202	16	9	Black
	302	30203	12	10,5	Black
	302	30206	14	10,5	Black
	302	30204	16	10,5	Black
	302	30251	12	9	Hygienic blue
	302	30255	14	9	Hygienic blue
	302	30252	16	9	Hygienic blue
	302	30253	12	10,5	Hygienic blue
	302	30256	14	10,5	Hygienic blue
	302	30254	16	10,5	Hygienic blue

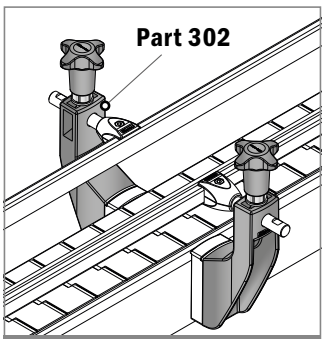

Example of application

Oadby Core product range
Oadby Available from stock in Leicester
Easy Available from stock in Italy
Standard Produced to order in Italy

Movex

Materiale / *Material / Materialien:*
Supporto: PA/*Support: PA/Halter: PA*
Volantino: PA+ottone nichelato/*Knob: PA+nickel plated brass/Sterngriff: PA+ Messing vernickelt*
Tirante: Acciaio inox/*Eyebolt: Stainless steel/Augenschraube: Edelstahl*

305 Supporto laterale -medio-
Side bracket -medium- / Geländerhalter -medium-

Delivery: Easy Standard

Part	Article-Nr.	ØA	B
305	30501	12	9
305	30505	14	9
305	30502	16	9
305	30503	12	10,5
305	30506	14	10,5
305	30504	16	10,5

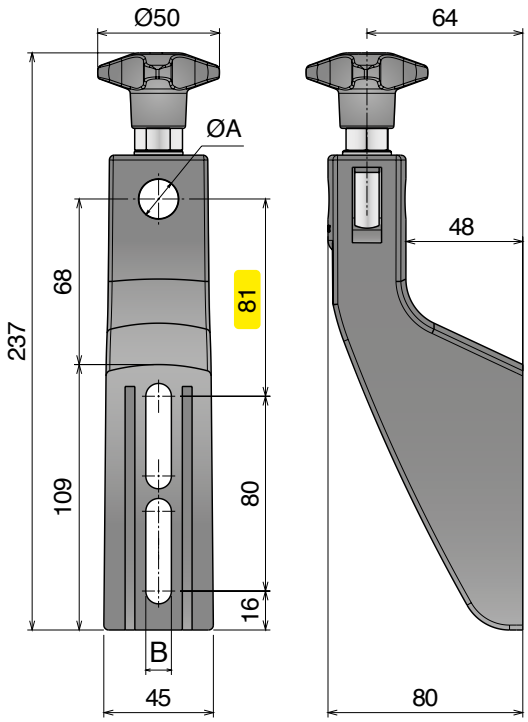

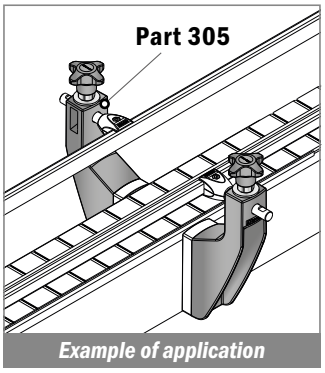

Example of application

306 Supporto laterale -medio- volantino alto
Side bracket -medium- high knob / Geländerhalter -medium- hoher Sterngriff

Delivery: Easy Standard

Part	Article-Nr.	ØA	B
306	30601	12	9
306	30605	14	9
306	30602	16	9
306	30603	12	10,5
306	30606	14	10,5
306	30604	16	10,5

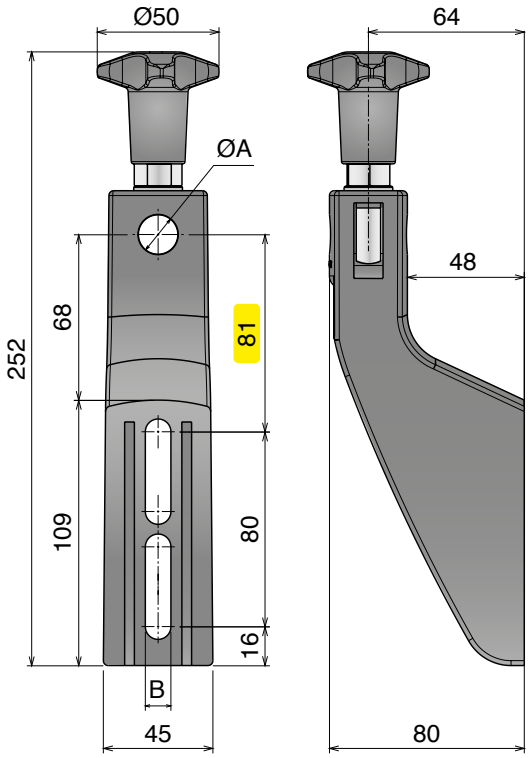

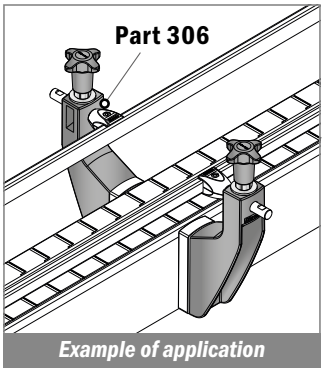

Example of application

Materiale / *Material* / *Materialien:* Supporto: PA/Support: PA/Halter: PA
Volantino: PA+ottone nichelato/Knob: *PA+nickel plated brass/Sterngriff: PA+ Messing vernickelt*
Tirante: Acciaio inox/*Eyebolt: Stainless steel/Augenschraube: Edelstahl*
Testina: PA o Acciaio inox/*Head: PA or stainless steel/Schwenkkopf: PA oder Edelstahl*
Vite, rondella e dado: Acciaio inox/*Screw, washer and nut: Stainless steel/Schraube, Unterlegs und Mutter: Edelstahl*

307 Supporto laterale -medio- orientabile
Side bracket -medium- adjustable / Geländerhalter -medium- einstellbar

Delivery: Easy Standard

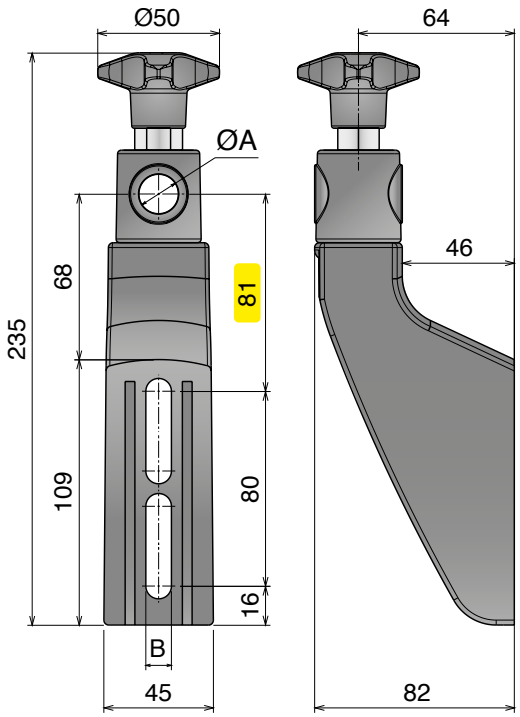

Part	Article-Nr.	ØA	B
307	30701	12	9
307	30705	14	9
307	30702	16	9
307	30703	12	10,5
307	30706	14	10,5
307	30704	16	10,5
307	30709	bracket	9
307	30710	bracket	10,5

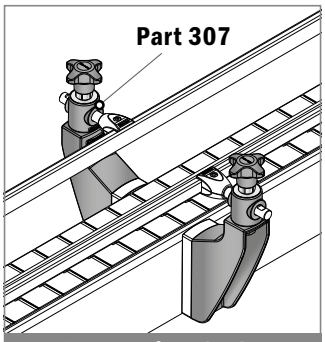

Example of application

308 Supporto laterale -medio- orientabile Accaio inox
Side bracket -medium- adjustable stainless steel / Geländerhalter -medium- einstellbar edelstahl

Delivery: Easy Standard

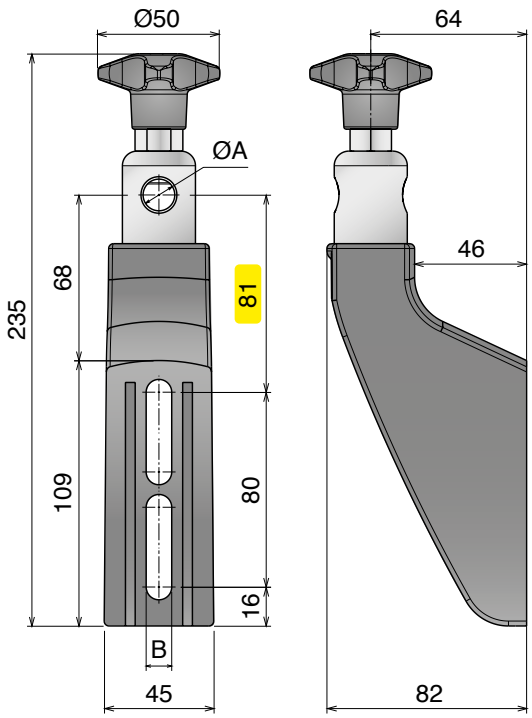

Part	Article-Nr.	ØA	B
308	30801	12	9
308	30805	14	9
308	30802	16	9
308	30803	12	10,5
308	30806	14	10,5
308	30804	16	10,5

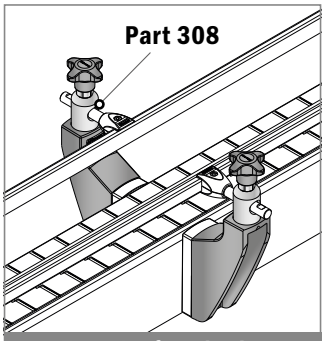

Example of application

Core product range
Available from stock in Leicester
Easy Available from stock in Italy
Standard Produced to order in Italy

Movex

Materiale / *Material / Materialien:*
Supporto: PA/*Support: PA/Halter: PA*
Volantino: PA+ottone nichelato/*Knob: PA+nickel plated brass/Sterngriff: PA+ Messing vernickelt*
Tirante: Acciaio inox/*Eyebolt: Stainless steel/Augenschraube: Edelstahl*

309 Supporto laterale -grande-
Side bracket -large- / Geländerhalter -groß-

Delivery: Easy | Standard

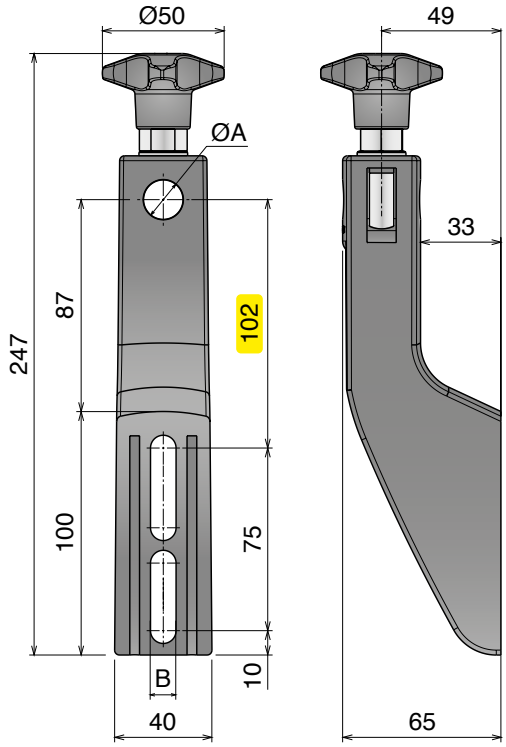

	Part	Article-Nr.	ØA	B
Oadby	309	30901	12	9
	309	30905	14	9
	309	30902	16	9
Oadby	309	30903	12	10,5
	309	30906	14	10,5
	309	30904	16	10,5

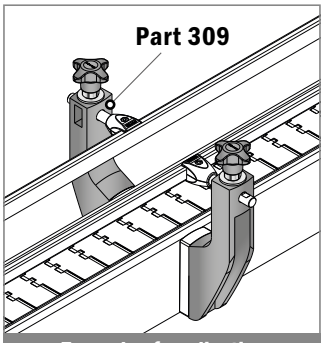

Example of application

310 Supporto laterale -grande- volantino alto
Side bracket -large- high knob / Geländerhalter -groß- hoher sterngriff

Delivery: Easy | Standard

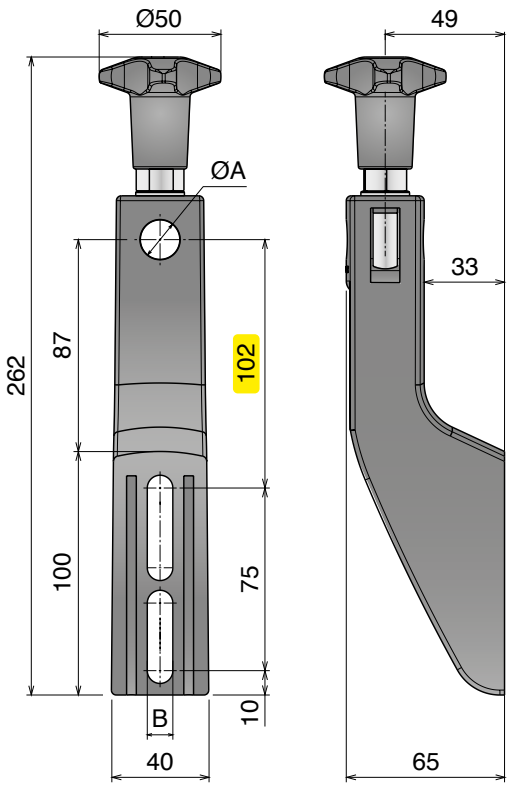

	Part	Article-Nr.	ØA	B
	310	31001	12	9
	310	31005	14	9
	310	31002	16	9
	310	31003	12	10,5
	310	31006	14	10,5
	310	31004	16	10,5

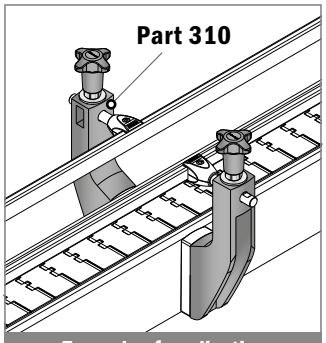

Example of application

Materiale / *Material* / *Materialien:* Supporto: PA/Support: PA/Halter: PA
Volantino: PA+ottone nichelato/Knob: *PA+nickel plated brass/Sterngriff: PA+ Messing vernickelt*
Tirante: Acciaio inox/*Eyebolt: Stainless steel/Augenschraube: Edelstahl*
Testina: PA o Acciaio inox/*Head: PA or stainless steel/Schwenkkopf: PA oder Edelstahl*
Vite, rondella e dado: Acciaio inox/*Screw, washer and nut: Stainless steel/Schraube, Unterlegs und Mutter: Edelstahl*

311 Supporto laterale -grande- orientabile
Side bracket -large- adjustable / Geländerhalter -groß- einstellbar

Delivery: Easy Standard

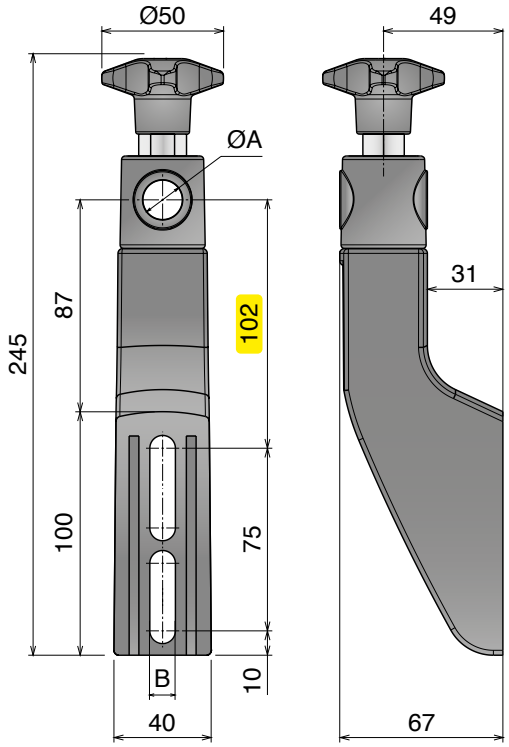

Part	Article-Nr.	ØA	B
311	31101	12	9
311	31105	14	9
311	31102	16	9
311	31103	12	10,5
311	31106	14	10,5
311	31104	16	10,5
311	31109	bracket	9
311	31110	bracket	10,5

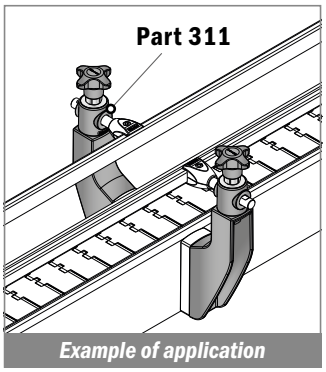

Example of application

312 Supporto laterale -grande- orientabile Accaio inox
Side bracket -large- adjustable stainless steel / Geländerhalter -groß- einstellbar edelstahl

Delivery: Easy Standard

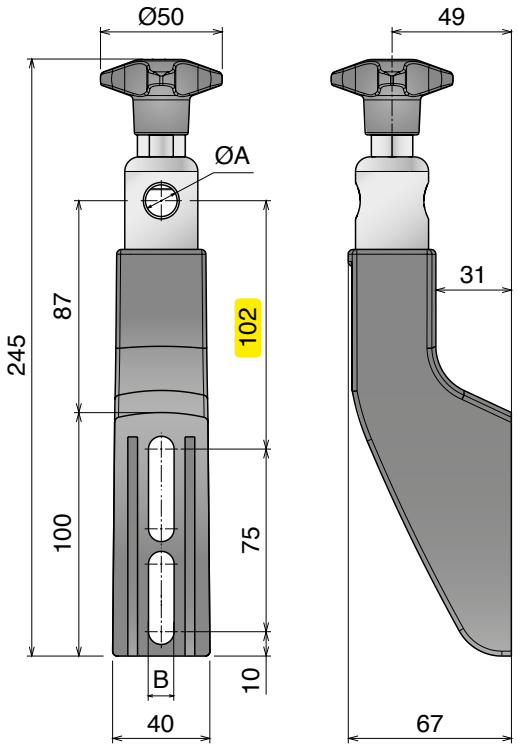

Part	Article-Nr.	ØA	B
312	31201	12	9
312	31205	14	9
312	31202	16	9
312	31203	12	10,5
312	31206	14	10,5
312	31204	16	10,5

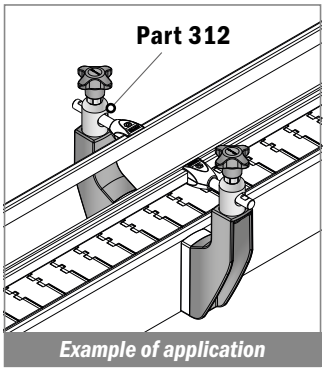

Example of application

Core product range
Available from stock in Leicester
Easy Available from stock in Italy
Standard Produced to order in Italy

Movex

321 Distanziale per supporto -piccolo
Spacer for bracket -small / Distanzstück für Geländerhalter -klein

NOW ALSO IN HYGIENIC BLUE

Delivery: Easy Standard — Used with bracket Part. **301-302** Pag 450

Part	Article-Nr.	Colour
321	32101	Black
321	32151	Hygienic blue

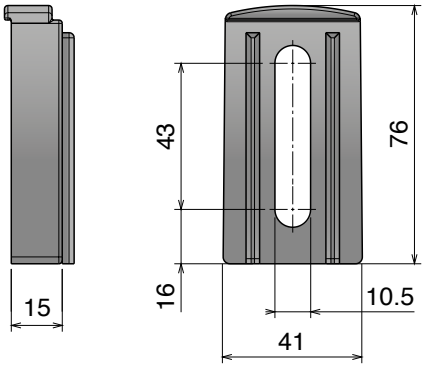

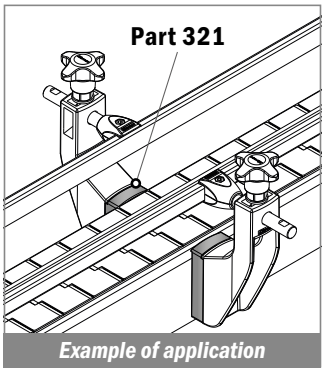

322 Distanziale per supporto -medio
Spacer for bracket -medium / Distanzstück für Geländerhalter -medium

Delivery: Easy Standard — Used with bracket Part. **305-306-307-308** Pag 451-452

Part	Article-Nr.	Colour
322	32201	Black

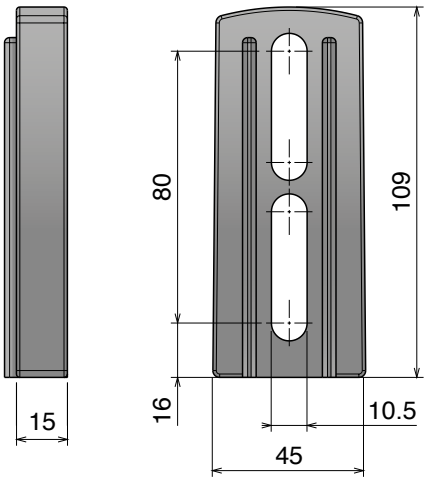

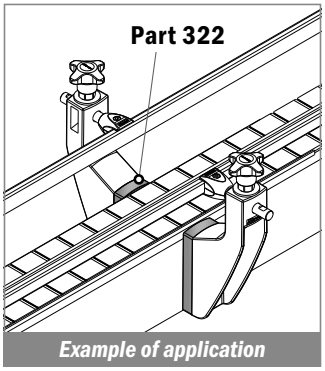

323 Distanziale per supporto -grande
Spacer for bracket -large / Distanzstück für Geländerhalter -groß

Delivery: Easy Standard — Used with bracket Part. **309-310-311-312** Pag 453-454

Part	Article-Nr.	Colour
322	32301	Black

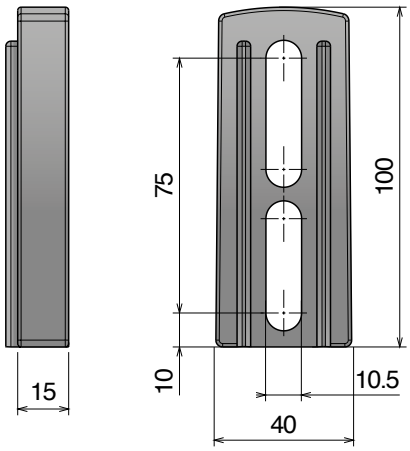

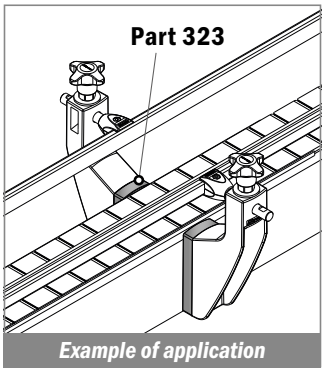

Materiale / *Material / Materialien:*
Supporto: Acciaio inox AISI 304/*Support: Stainless steel* AISI 304/*Halter: Edelstahl* AISI 304
Volantino: PA+ottone nichelato/*Knob: PA+nickel plated brass/Sterngriff: PA+Messing vernickelt*

398 Supporto laterale inox -medio- orientabile
SS bracket -medium- adjustable / Edelstahl Geländerhalter -medium- einstellbar

NOW ALSO IN HYGIENIC BLUE

Delivery: Easy Standard

Part	Article-Nr.	ØA	Knob Colour
398	39860	12	Black
398	39862	14	Black
398	39861	16	Black
398	9860HB	12	Hygienic blue
398	9862HB	14	Hygienic blue
398	9861HB	16	Hygienic blue

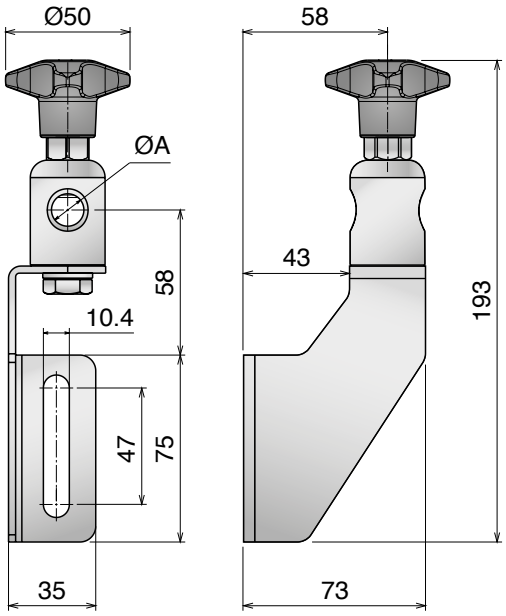

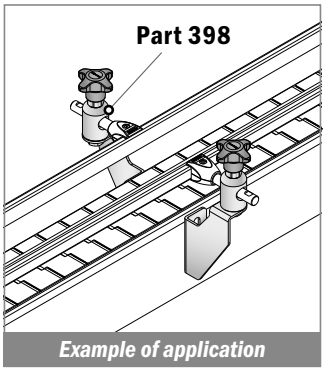

Supporto laterale inox -grande- orientabile
SS bracket -large- adjustable / Edelstahl Geländerhalter -groß- einstellbar

Part	Article-Nr.	ØA	Knob Colour
398	39870	12	Black
398	39872	14	Black
398	39871	16	Black
398	9870HB	12	Hygienic blue
398	9872HB	14	Hygienic blue
398	9871HB	16	Hygienic blue

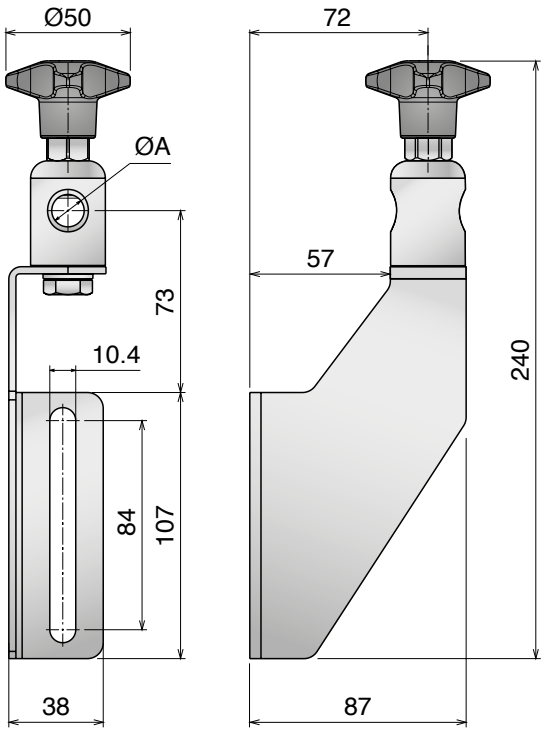

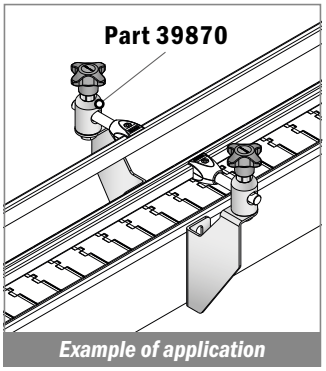

Oadby Core product range
Oadby Available from stock in Leicester
Easy Available from stock in Italy
Standard Produced to order in Italy

Movex

NEW

398 Supporto laterale inox -piccolo
SS bracket -small / Edelstahl Geländerhalter -klein

Stainless Steel | AISI 304

Width 60 mm – Height 64 mm

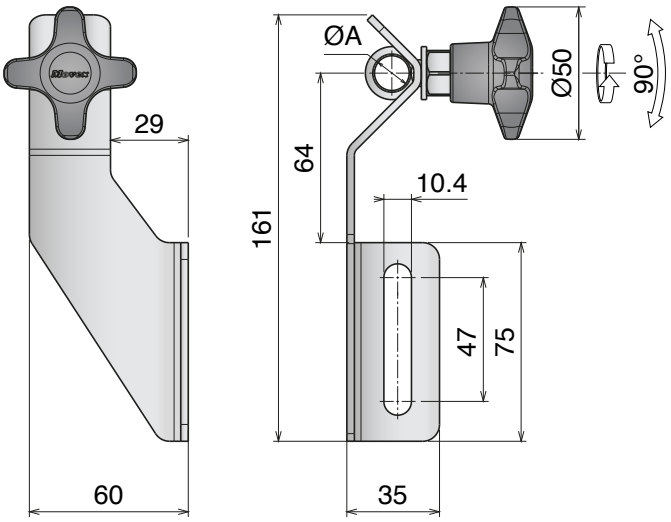

Advantages:

- Hygienic design
- Stronger design
- Easy to install
- Corrosion resistant
- High temperature resistant
- Fixing system customizable

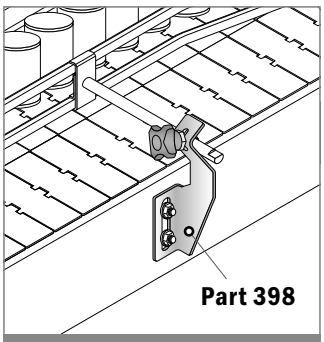

Example of application

Stainless steel knob

Part	Article-Nr.	ØA
398	39810SK	12-13
398	39811SK	14
398	39812SK	16

Plastic knob

Part	Article-Nr.	ØA
398	39810	12-13
398	39811	14
398	39812	16

Stainless steel nut

Part	Article-Nr.	ØA
398	39810S	12-13
398	39811S	14
398	39812S	16

Materiale / *Material* / *Materialien:* Supporto: Acciaio inox/*Support: Stainless steel/Halter: Edelstahl*
Volantino: PA-Acciaio inox/*Knob: PA-Stainless steel/Sterngriff: PA-Edelstahl*
Tirante: Acciaio inox/Eyebolt: Stainless steel/Augenschraube: Edelstahl
Rondella e dado: Acciaio inox/Washer and nut: Stainless steel/Scheibe und Mutter: Edelstahl

NEW

398 Supporto laterale inox -medio

SS bracket -medium / Edelstahl Geländerhalter -medium

Stainless Steel | AISI 304

Width 77,5 mm – Height 64 mm

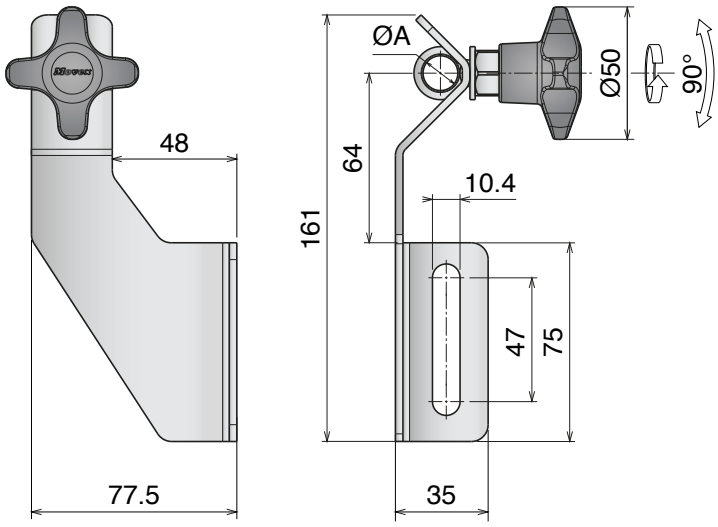

Advantages:

- Hygienic design
- Stronger design
- Easy to install
- Corrosion resistant
- High temperature resistant
- Fixing system customizable

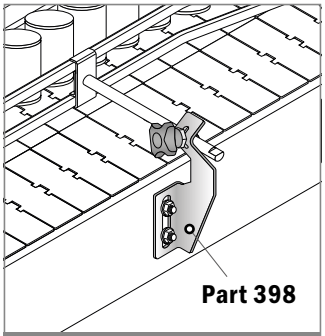

Example of application

Stainless steel knob

Part	Article-Nr.	ØA
398	39820SK	12-13
398	39821SK	14
398	39822SK	16

Plastic knob

Part	Article-Nr.	ØA
398	39820	12-13
398	39821	14
398	39822	16

Stainless steel nut

Part	Article-Nr.	ØA
398	39820S	12-13
398	39821S	14
398	39822S	16

Oadby Core product range
Oadby Available from stock in Leicester
Easy Available from stock in Italy
Standard Produced to order in Italy

Movex

NEW

398 Supporto laterale inox -grande
SS bracket -large / Edelstahl Geländerhalter -groß

Stainless Steel | AISI 304

Delivery: Easy Standard

Width 94 mm – Height 97 mm

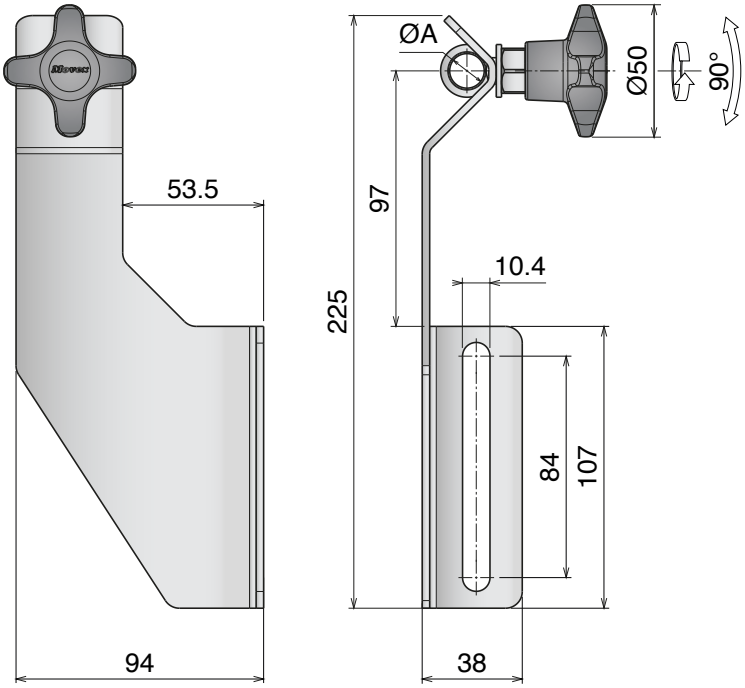

Advantages:

- Hygienic design
- Stronger design
- Easy to install
- Corrosion resistant
- High temperature resistant
- Fixing system customizable

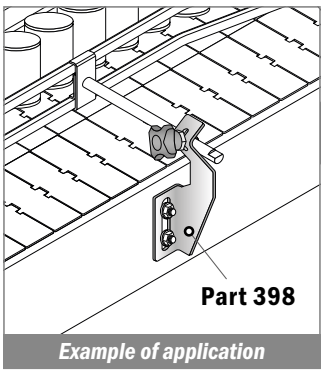

Example of application

Stainless steel knob

Part	Article-Nr.	ØA
398	39830SK	12-13
398	39831SK	14
398	39832SK	16

Plastic knob

Part	Article-Nr.	ØA
398	39830	12-13
398	39831	14
398	39832	16

Stainless steel nut

Part	Article-Nr.	ØA
398	39830S	12-13
398	39831S	14
398	39832S	16

Materiale / *Material* / *Materialien:* Supporto: Acciaio inox/*Support: Stainless steel/Halter: Edelstahl*
Volantino: PA-Acciaio inox/*Knob: PA-Stainless steel/Sterngriff: PA-Edelstahl*
Tirante: Acciaio inox/Eyebolt: Stainless steel/Augenschraube: Edelstahl
Vite, rondella e dado: Acciaio inox / Screw, washer and nut: Stainless steel / Schraube, Scheibe und Mutter: Edelstahl

NEW

398 Supporto laterale inox -medio- orientabile
SS bracket -medium- adjustable / Edelstahl Geländerhalter -medium- einstellbar

Stainless Steel | AISI 304

Width 73 mm – Height 64 mm

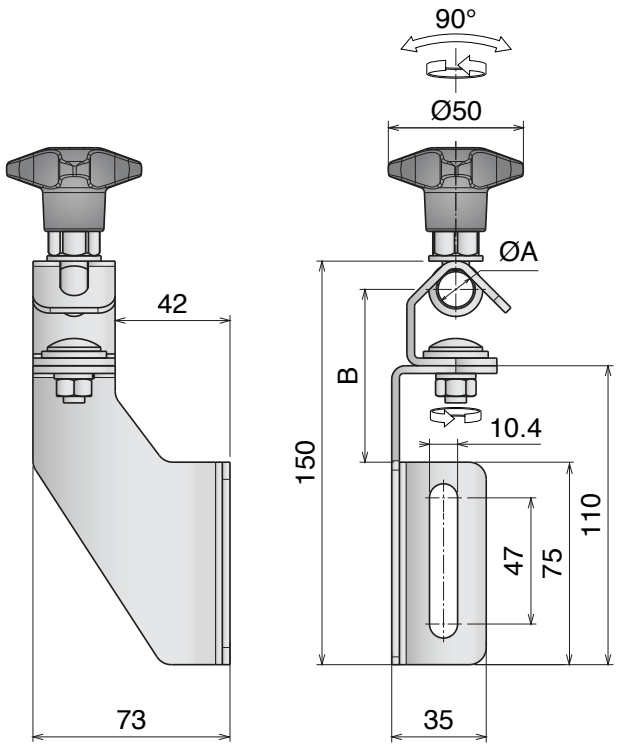

Advantages:

- Hygienic design
- Stronger design
- Easy to install
- Corrosion resistant
- High temperature resistant
- Fixing system customizable

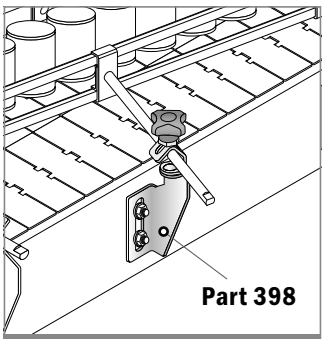

Example of application

Stainless steel knob

Part	Article-Nr.	ØA	B
398	39840SK	12-13	64
398	39841SK	14	62,5
398	39842SK	16	61

Plastic knob

Part	Article-Nr.	ØA	B
398	39840	12-13	64
398	39841	14	62,5
398	39842	16	61

Stainless steel nut

Part	Article-Nr.	ØA	B
398	39840S	12-13	64
398	39841S	14	62,5
398	39842S	16	61

Oadby Core product range
Oadby Available from stock in Leicester
Easy Available from stock in Italy
Standard Produced to order in Italy

Movex

NEW

398 Supporto laterale inox -grande- orientabile
SS bracket -large- adjustable / Edelstahl Geländerhalter -groß- einstellbar

Stainless Steel | AISI 304

Delivery: Easy Standard

Width 87 mm – Height 97 mm

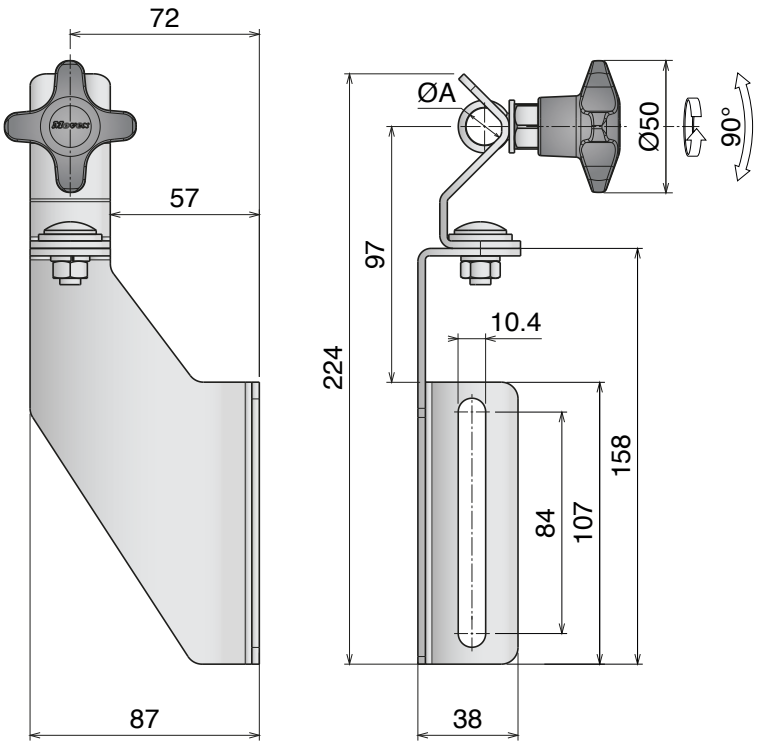

Advantages:

- Hygienic design
- Stronger design
- Easy to install
- Corrosion resistant
- High temperature resistant
- Fixing system customizable

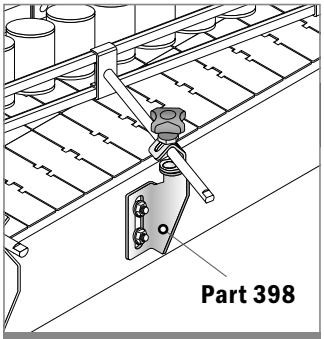

Example of application

Stainless steel knob

Part	Article-Nr.	ØA
398	39850SK	12-13
398	39851SK	14
398	39852SK	16

Plastic knob

Part	Article-Nr.	ØA
398	39850	12-13
398	39851	14
398	39852	16

Stainless steel nut

Part	Article-Nr.	ØA
398	39850S	12-13
398	39851S	14
398	39852S	16

Materiale / *Material* / *Materialien:* Testina: Acciaio inox/*Head: Stainless steel/Schwenkkopf: Edelstahl*
Volantino: PA-Acciaio inox/*Knob: PA-Stainless steel/Sterngriff: PA-Edelstahl*
Tirante: Acciaio inox/Eyebolt: Stainless steel/Augenschraube: Edelstahl
Vite, rondella e dado: Acciaio inox / Screw, washer and nut: Stainless steel / Schraube, Scheibe und Mutter: Edelstahl

NEW

398 Testina orientabile inox -media

Stainless steel adjustable head -medium / Edelstahl Schwenkkopf -medium

Stainless Steel | AISI 304

Height 28 mm

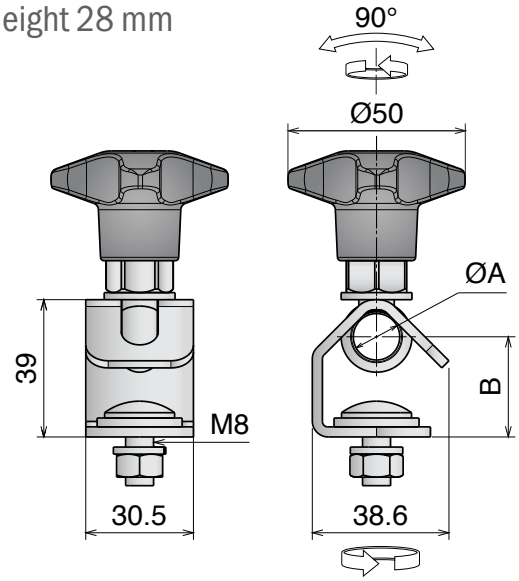

Advantages:

- Hygienic design
- Stronger design
- Easy to install
- Corrosion resistant
- High temperature resistant
- Fixing system customizable

Stainless steel knob

Part	Article-Nr.	ØA	B
398	39845SK	12-13	29
398	39846SK	14	27,5
398	39847SK	16	26

Plastic knob

Part	Article-Nr.	ØA	B
398	39845	12-13	29
398	39846	14	27,5
398	39847	16	26

Stainless steel nut

Part	Article-Nr.	ØA	B
398	39845S	12-13	29
398	39846S	14	27,5
398	39847S	16	26

Oadby Core product range
Oadby Available from stock in Leicester
Easy Available from stock in Italy
Standard Produced to order in Italy

Movex

NEW

398 Testina orientabile inox -alta

Stainless steel adjustable head -large / Edelstahl Schwenkkopf -groß

Stainless Steel | AISI 304

Height 46 mm

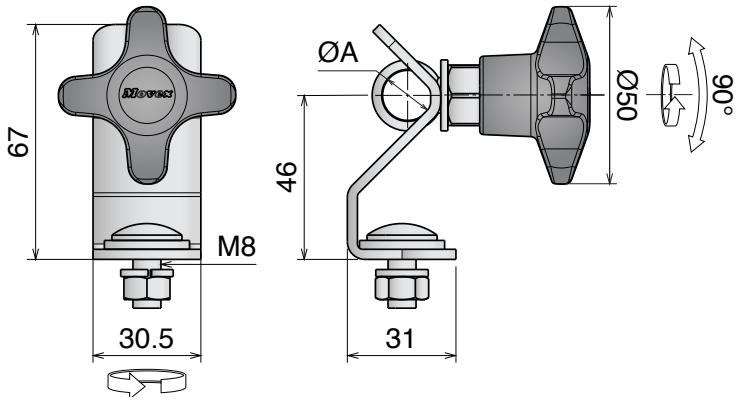

Advantages:

- Hygienic design
- Stronger design
- Easy to install
- Corrosion resistant
- High temperature resistant
- Fixing system customizable

Stainless steel knob

Part	Article-Nr.	ØA
398	39855SK	12-13
398	39856SK	14
398	39857SK	16

Plastic knob

Part	Article-Nr.	ØA
398	39855	12-13
398	39856	14
398	39857	16

Stainless steel nut

Part	Article-Nr.	ØA
398	39855S	12-13
398	39856S	14
398	39857S	16

Materiale / *Material / Materialien:*
Volantino: PA+ottone nichelato/Knob: *PA+nickel plated brass/Sterngriff: PA+ Messing vernickelt*
Tirante: Acciaio inox/*Eyebolt: Stainless steel/Augenschraube: Edelstahl*
Testina: PA o Acciaio inox/*Head: PA or stainless steel/Schwenkkopf: PA oder Edelstahl*
Vite, rondella e dado: Acciaio inox/*Screw, washer and nut: Stainless steel/Schraube, Scheibe und Mutter: Edelstahl*

313 Testina orientabile
Adjustable head / Schwenkkopf

NOW ALSO IN HYGIENIC BLUE

Delivery: Easy Standard

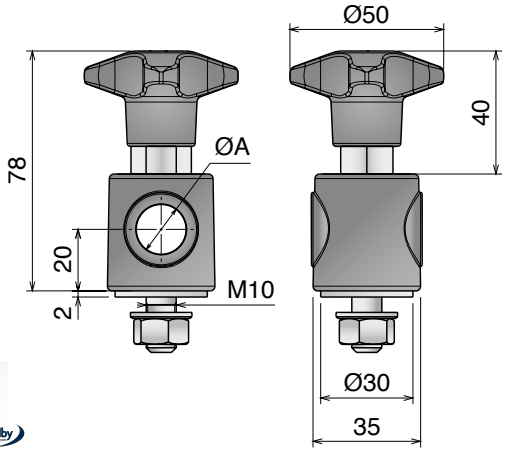

Spacer
31330

	Part	Article-Nr.	ØA	Knob Colour
Oadby	313	31301	12	Black
	313	31303	14	Black
	313	31302	16	Black
	313	31351	12	Hygienic blue
	313	31353	14	Hygienic blue
	313	31352	16	Hygienic blue
Oadby	313	31311	12-without knob	-
	313	31313	14-without knob	-
	313	31312	16-without knob	-

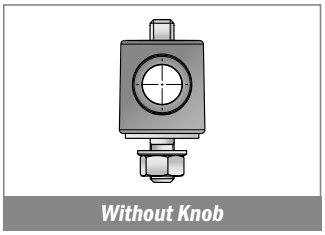
Without Knob

314 Testina orientabile, acciaio inox
Adjustable head, stainless steel / Schwenkkopf, Edelstahl

NOW ALSO IN HYGIENIC BLUE

Delivery: Easy Standard

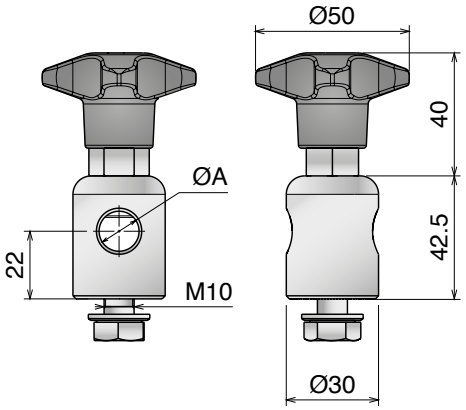

	Part	Article-Nr.	ØA	Knob Colour
Oadby	314	31401	12	Black
	314	31403	14	Black
	314	31402	16	Black
	314	31451	12	Hygienic blue
	314	31453	14	Hygienic blue
	314	31452	16	Hygienic blue
	314	31411	12-without knob	-
	314	31413	14-without knob	-
Oadby	314	31412	16-without knob	-

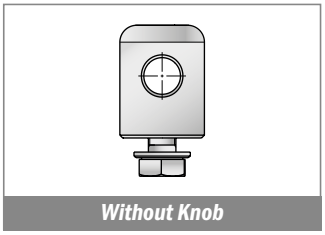
Without Knob

Testina orientabile alta, acciaio inox
Adjustable head, stainless steel / Schwenkkopf, Edelstahl

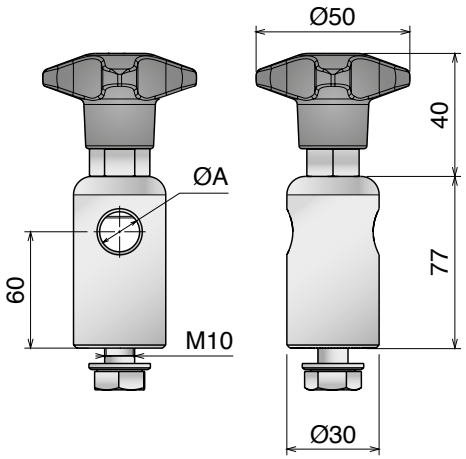

	Part	Article-Nr.	ØA
Oadby	314	31409	12
	314	31414	14
	314	31410	16
	314	31419	12-without knob
	314	31421	14-without knob
	314	31420	16-without knob

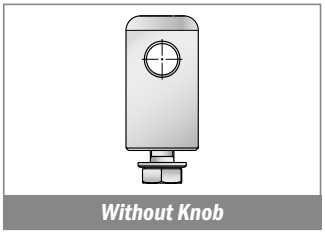
Without Knob

Oadby Core product range
Oadby Available from stock in Leicester
Easy Available from stock in Italy
Standard Produced to order in Italy

315 Supporto laterale "L"
L-bracket / Winkel

Stainless Steel | AISI 304

Delivery: Easy Standard

Part	Article-Nr.	Type
315	31501	A
315	31502	B

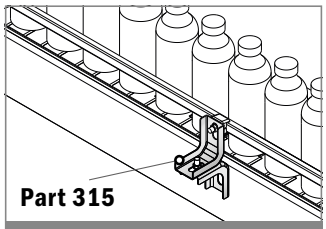

Example of application

TYPE **A** -WITHOUT NOSE

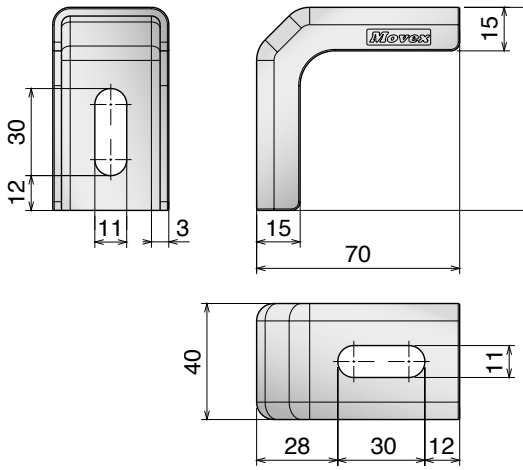

TYPE **B** -WITH NOSE

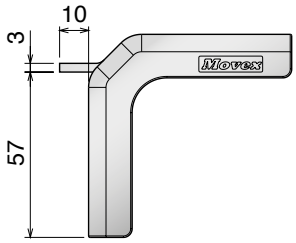

316 Supporto laterale "L"
L-bracket / Winkel

Stainless Steel | AISI 304

Delivery: Easy Standard

Part	Article-Nr.	Type
316	31601	A
316	31602	B

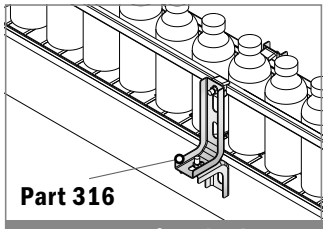

Example of application

TYPE **A** -WITHOUT NOSE

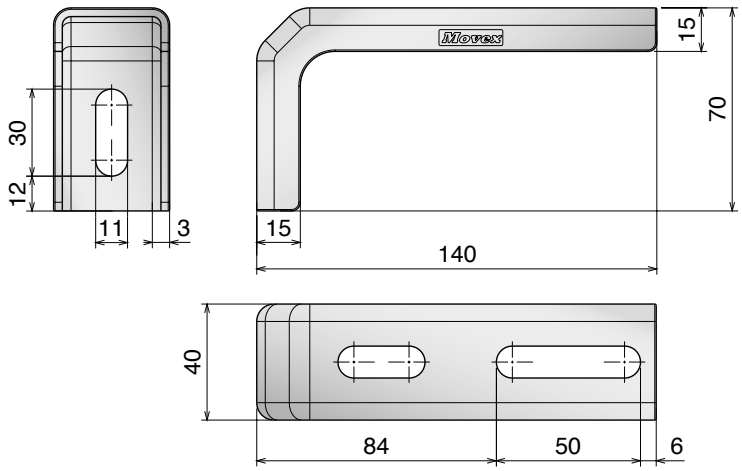

TYPE **B** -WITH NOSE

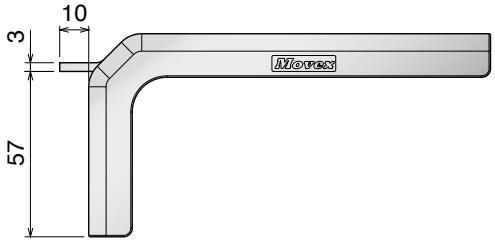

Materiale / *Material / Materialien:*
Poliammide + ottone nichelato
Polyamide + nickel plated brass
Polyamid + Messing vernickelt

317 Volantino
Star knob / Sterngriff

NOW ALSO IN HYGIENIC BLUE

Delivery: Easy Standard

Part	Article-Nr.	A	Ø	Knob Colour
317	31702	M10	40	Black
317	31703	M8	50	Black
317	31701	M10	50	Black
317	31704	M12	50	Black
317	31753	M8	50	Hygienic blue
317	31751	M10	50	Hygienic blue
317	31754	M12	50	Hygienic blue

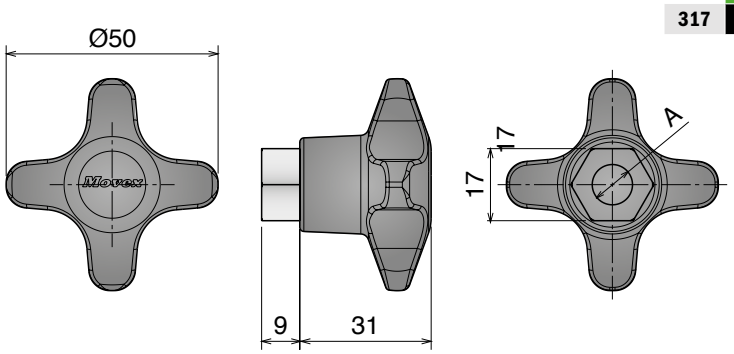

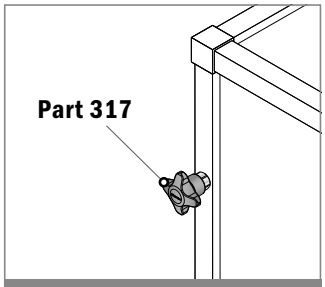

Example of application

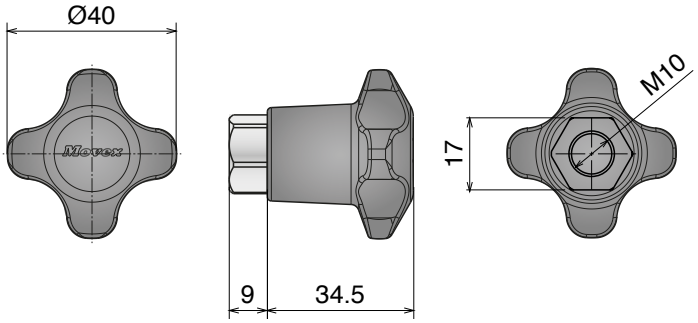

NOW ALSO IN HYGIENIC BLUE

Volantino con tirante
Star knob with eye-bolt / Sterngriff mit Augenschraube

Part	Article-Nr.	ØA	Knob Colour
317	31799	12	Black
317	31797	14	Black
317	31798	16	Black
317	31759	12	Hygienic blue
317	31757	14	Hygienic blue
317	31758	16	Hygienic blue

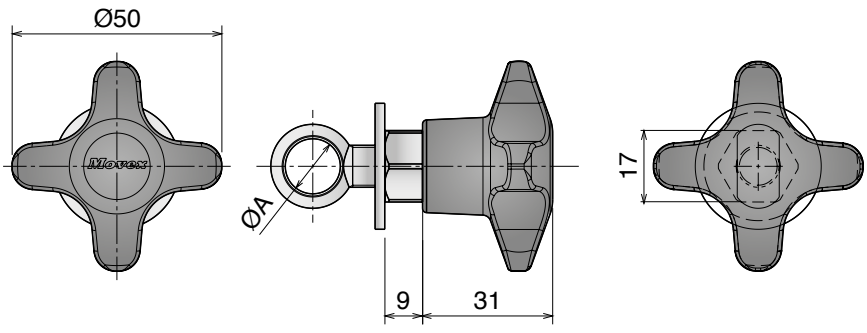

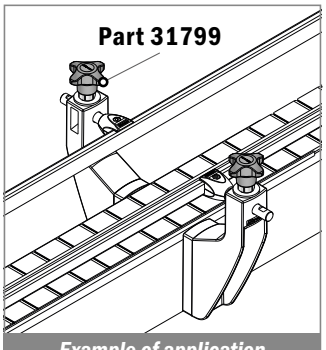

Example of application

Core product range
Available from stock in Leicester
Available from stock in Italy
Produced to order in Italy

Movex

318 Volantino
Star knob / Sterngriff

RANGE EXTENSION

Delivery: Easy Standard

Part	Article-Nr.	A
318	31802	M8
318	31801	M10
318	31803	M12

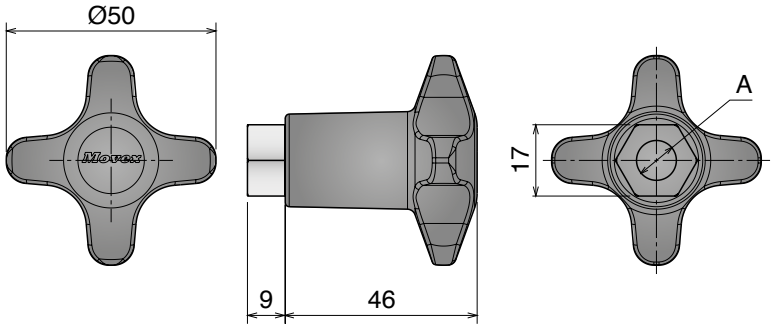

319 Volantino
Star knob / Sterngriff

RANGE EXTENSION

Delivery: Easy Standard

Part	Article-Nr.	A
319	31903	M8
319	31901	M10
319	31904	M12

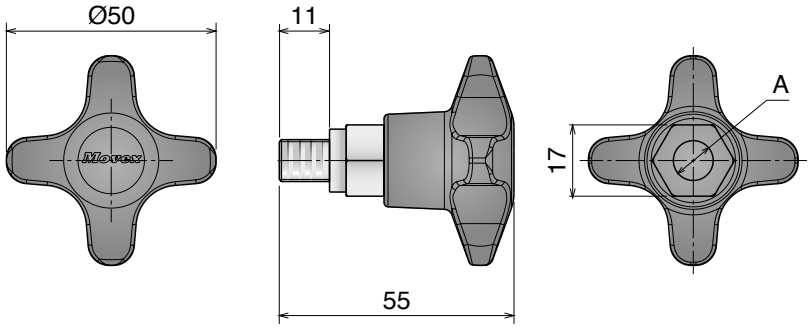

3001 Volantino a croce con boccola filettata
Star knob with threaded bush/ Sterngriff mit Innengewinde

RANGE EXTENSION

Part	Article-Nr.	ØA	Threaded bush
3001	300103	M8	Stainless steel
3001	300101	M10	Stainless steel
3001	300105	M12	Stainless steel
3001	300104	M8	Brass
3001	300102	M10	Brass
3001	300106	M12	Brass

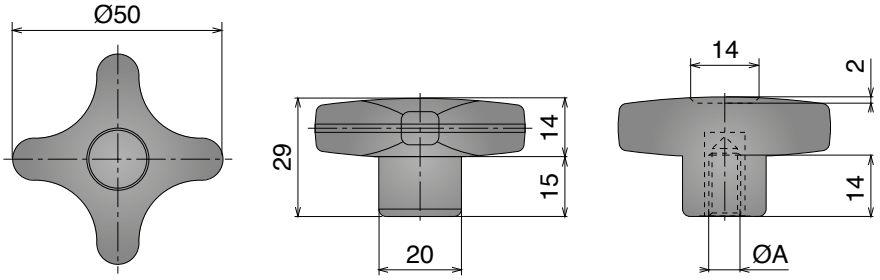

Materiale / *Material / Materialien:*
Part. 317: Acciaio inox /Stainless steel/Edelstahl
Part. 320: Poliammide + ottone nichelato/Polyamide + nickel plated brass/Polyamid + messing vernickelt
Part.3007: Poliammide + ottone / Polyamide + brass / Polyamid + messing

NEW

317

Volantino Acciaio inox
Star knob stainless steel / Sterngriff Edelstahl

Stainless Steel | AISI 304

Delivery: Easy Standard

Part	Article-Nr.	ØA
317	31721	M10

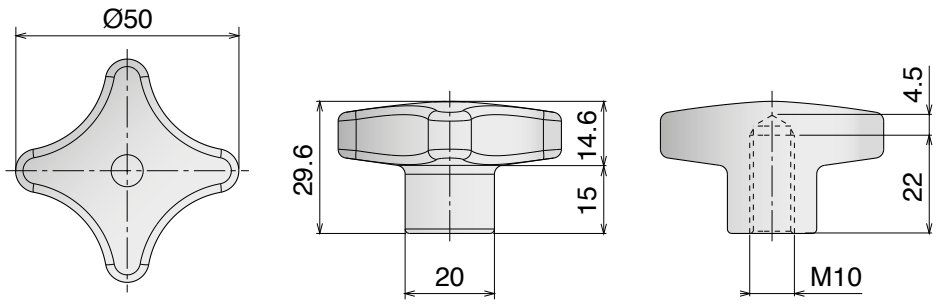

320

Volantino Ø80
Star knob Ø80 / Sterngriff Ø80

Delivery: Easy Standard

Part	Article-Nr.	ØA	H
320	32001	M12	12
320	32002KN	M16	15

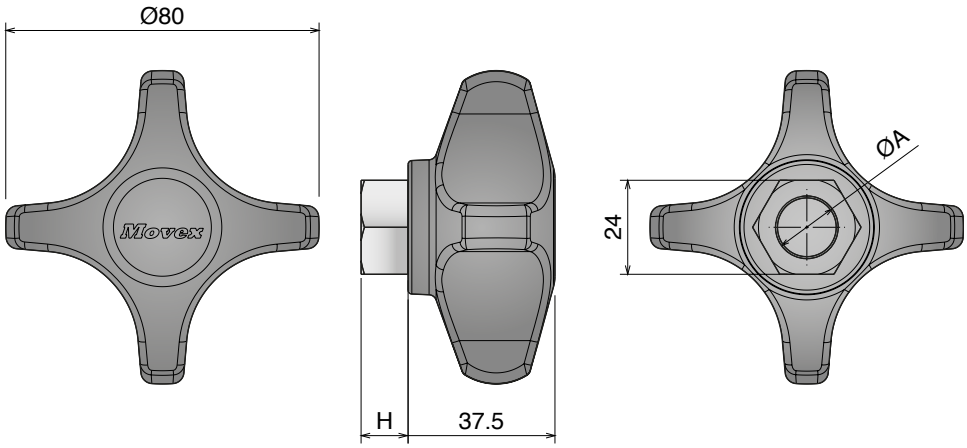

NEW

3007

Impugnatura con boccola filettata
Knob with threaded bushing/Drehgriff mit Gewindebuchse

Part	Article-Nr.	ØA	B
3007	300701	M8	15
3007	300702	M10	14
3007	300703	M12	18

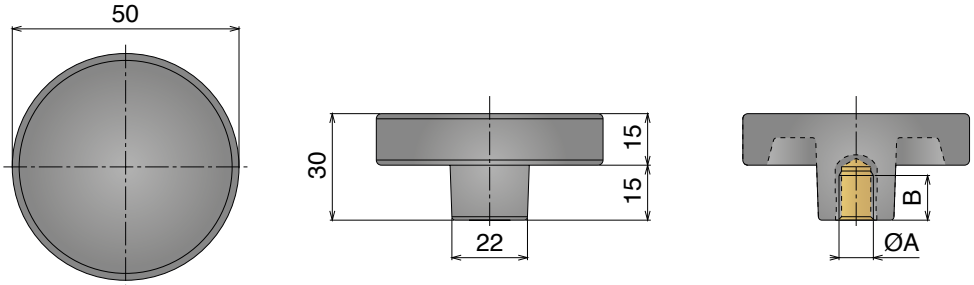

Oadby Core product range
Oadby Available from stock in Leicester
Easy Available from stock in Italy
Standard Produced to order in Italy

Movex

Materiale / *Material / Materialien:*
Part. 3008: Poliammide + acciaio zincato/Polyamide + galvanised steel
Polyamid + verzinktem stahl
Part. 3002: Poliammide + ottone / Polyamide + brass / Polyamid + messing

NEW

3008

Impugnatura con perno filettato
Knob with threaded pin/Drehgriffschraube

Part	Article-Nr.	ØA	B
3008	300801	M8	25
3008	300802	M10	25
3008	300803	M12	30

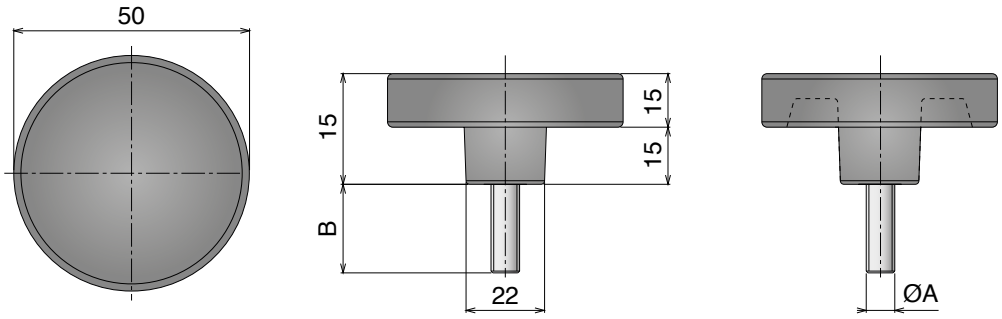

3002

Tirante con boccola filettata
Handle with threaded insert / T-Griff mit Innengewinde

Delivery: Easy Standard

Part	Article-Nr.	A	B	C	ØD	E	F	G	H
3002	300201	50	15	5	M6	14	17	10	24
3002	300202	50	15	5	M8	14	17	14	24
3002	300203	60	18	6	M10	16.5	24	21	33

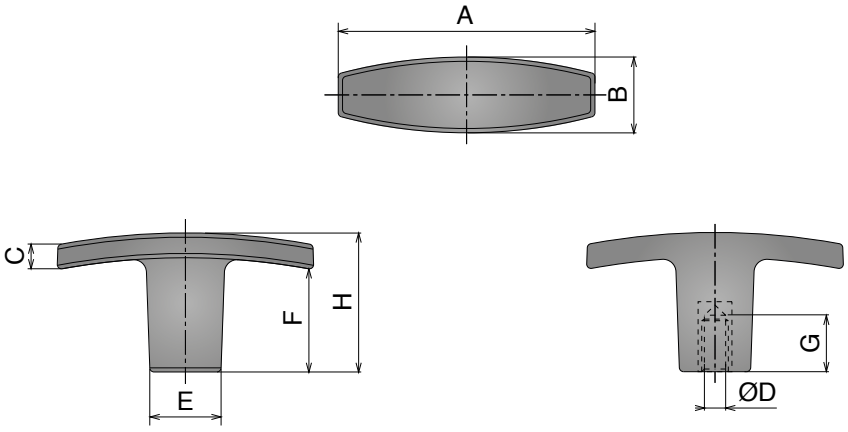

Materiale / *Material* / *Materialien:* Morsetti: PA/Clamp: PA/Klemme: PA
Vite, perno e rondella: Acciaio inox/Screw, pin and washer: Stainless steel
Schraube, Bolzen und Scheibe: Edelstahl
Dado: ottone nichelato/Nut: nickel plated brass/Mutter: Messing vernickelt

324 Morsetto singolo per guida laterale conica
Single clamp for conical side guide / Einfachklemme für konische Seitenführung

NOW ALSO IN HYGIENIC BLUE

Delivery: Easy Standard — Used with Part 349/350 Pag 478 and Part 356 Pag 481

Part	Article-Nr.	ØA	Colour
324	32401	without pin	Black
324	32451	without pin	Hygienic blue

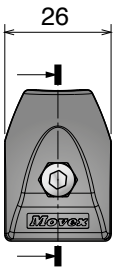

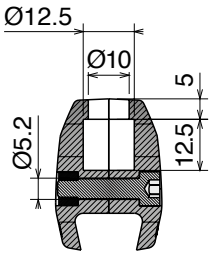

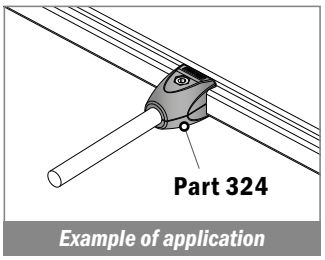

Example of application

Used with **Guide rail** Pag 348

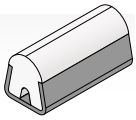

325 Morsetto singolo per guida laterale conica
Single clamp for conical side guide / Einfachklemme für konische Seitenführung

NOW ALSO IN HYGIENIC BLUE

Delivery: Easy Standard

Part	Article-Nr.	ØA	Colour
325	32501	without pin	Black
325	32551	without pin	Hygienic blue

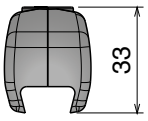

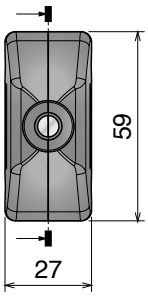

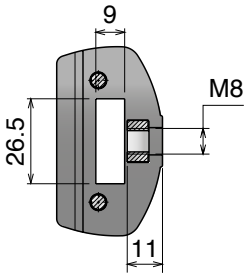

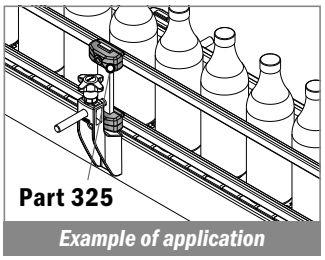

Example of application

Used with **Guide rail** Pag 348

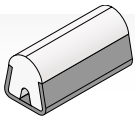

NEW 3009 Morsetto singolo per guida laterale
Single clamp for side guide / Einfachklemme für Seitenführung

NOW ALSO IN HYGIENIC BLUE

Part	Article-Nr.	ØA	Colour
3009	300901	without pin	Black
3009	300902	without pin	Hygienic blue

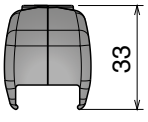

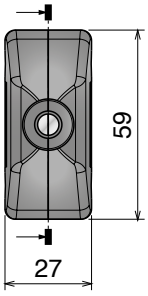

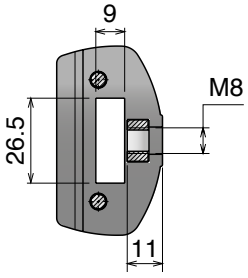

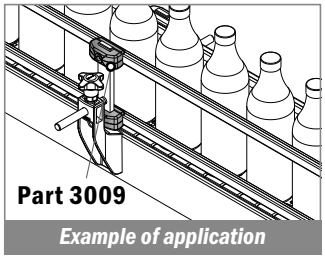

Example of application

Used with **PART 134** Pag 383

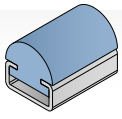

Core product range
Available from stock in Leicester
Available from stock in Italy
Produced to order in Italy

Movex

326

Morsetto singolo per guida laterale conica
Single clamp for conical side guide / Einfachklemme für konische Seitenführung

NOW ALSO IN HYGIENIC BLUE

Delivery: Easy | Standard

Part	Article-Nr.	Colour
326	32601	Black
326	32651	Hygienic blue

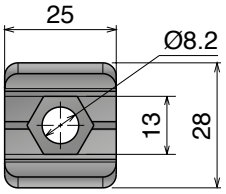

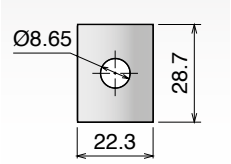

Reinforced plate 33201
3 mm thickness

Used with **Guide rail**
Pag 348

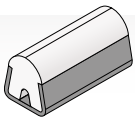

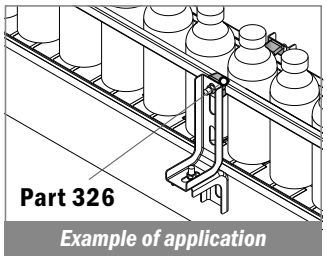

Example of application

NEW 3013

Morsetto singolo per guida laterale conica
Single clamp for conical side guide / Einfachklemme für konische Seitenführung

Stainless Steel | AISI 304

Delivery: Easy | Standard — Screws supplied not assembled

Part	Article-Nr.	Suitable for
3013	301301	● 12/14/15/16 ■ 25x6/25x8

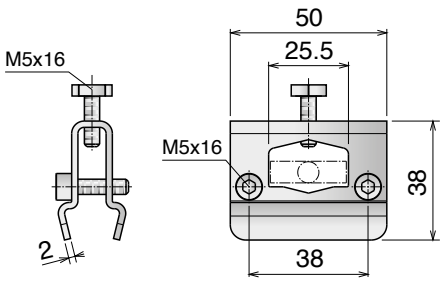

Used with **Guide rail**
Pag 348

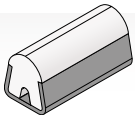

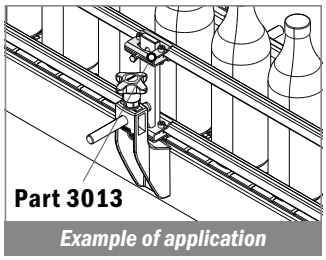

Example of application

NEW 3010

Morsetto doppio regolabile
Adjustable double clamp / Einstellbare Doppelklemme

Stainless Steel | AISI 304

Delivery: Easy | Standard

Part	Article-Nr.	ØA
3010	301001	without pin

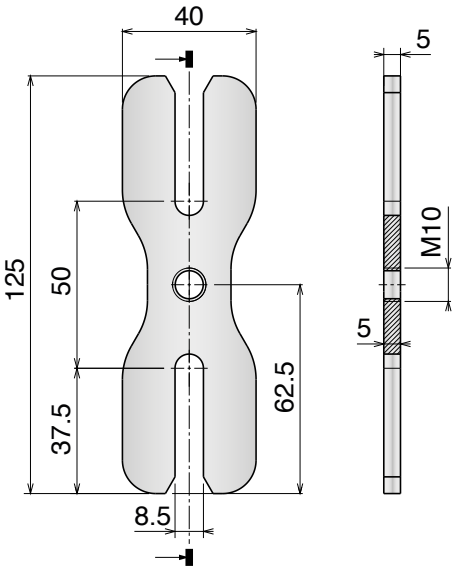

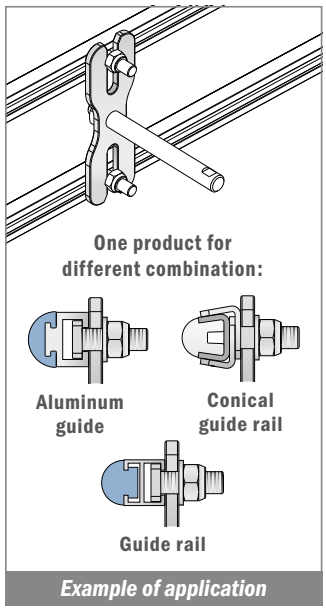

Example of application

Materiale / *Material* / *Materialien:*
Morsetto: PA/Clamp: PA/Klemme: PA
Perno e rondella: Acciaio inox/Pin and washer: Stainless steel/Bolzen und Scheibe: Edelstahl
Dado: ottone nichelato/Nut: nickel plate brass/Mutter: Messing vernickelt

327 Morsetto doppio per guida laterale conica
Double clamp for conical side guide / Doppelklemme für konische Seitenführung

Delivery: Easy Standard

Part	Article-Nr.	ØA
327	32701	without pin
327	32702	12
327	32703	16

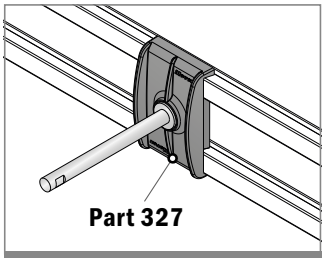

Example of application

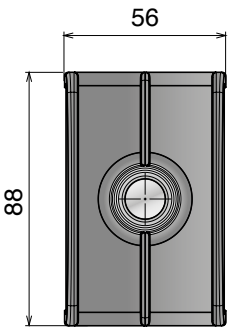

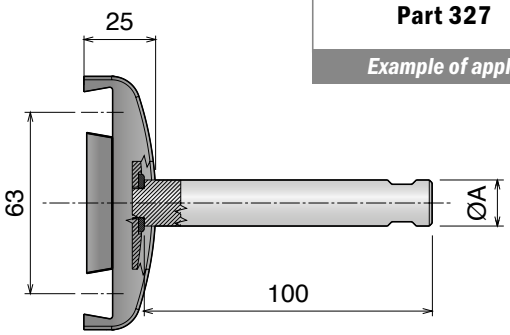

Used with
Guide rail
Pag 348

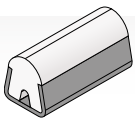

NEW 3012 Morsetto doppio per guida laterale
Double clamp for side guide / Doppelklemme für Seitenführung

Part	Article-Nr.	ØA
3012	301201	without pin
3012	301202	12
3012	301203	16

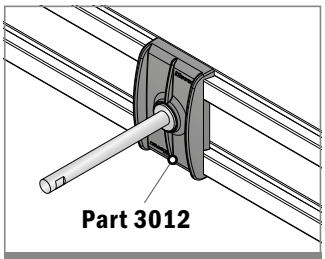

Example of application

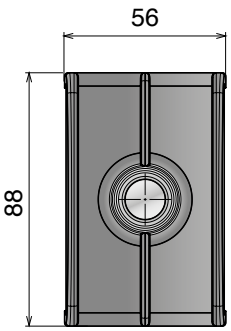

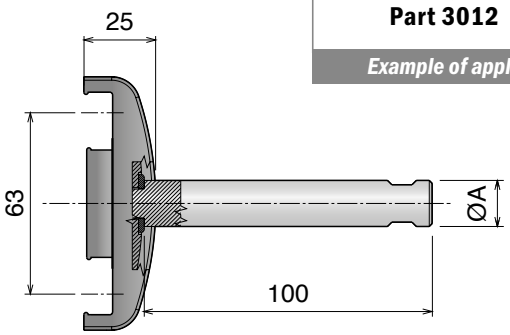

Used with
PART 134
Pag 383

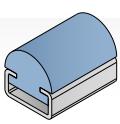

Oadby Core product range
Oadby Available from stock in Leicester
Easy Available from stock in Italy
Standard Produced to order in Italy

Movex

337 Morsetto singolo per tondino
Single clamp for round bar / Einfachklemme für Rund Profil

NOW ALSO IN HYGIENIC BLUE

Delivery: Easy Standard — Used with Part 349/350 Pag 478 and Part 356 Pag 481

Part	Article-Nr.	ØA	Colour
337	33701	10	Black
337	33702	12	Black
337	33751	10	Hygienic blue
337	33752	12	Hygienic blue

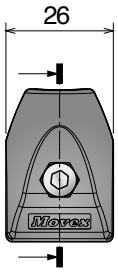

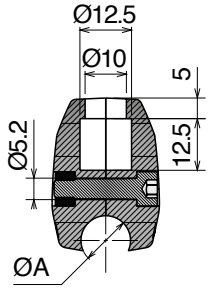

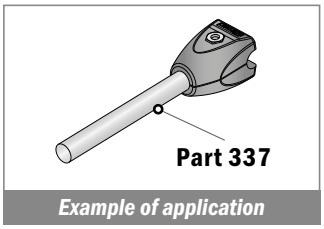

Example of application

338 Morsetto singolo per tondino
Single clamp for round bar / Einfachklemme für Rund Profil

NOW ALSO IN HYGIENIC BLUE

Delivery: Easy Standard

Part	Article-Nr.	ØA	Colour
338	33801	10	Black
338	33802	12	Black
338	33851	10	Hygienic blue
338	33852	12	Hygienic blue

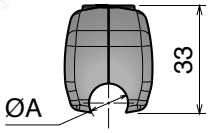

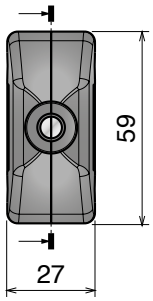

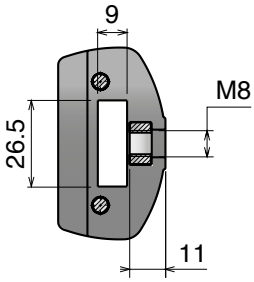

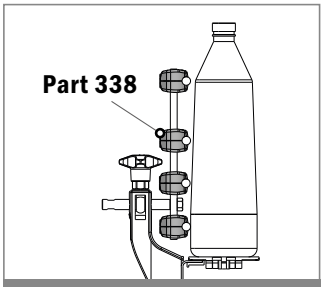

Example of application

339 Morsetto doppio per tondino
Double clamp for round bar / Doppelklemme für Rund Profil

NOW ALSO IN HYGIENIC BLUE

Delivery: Easy Standard

Part	Article-Nr.	ØA	Colour
339	33901	without pin	Black
339	33902	12	Black
339	33904	14	Black
339	33903	16	Black
339	33951	without pin	Hygienic blue
339	33952	12	Hygienic blue
339	33954	14	Hygienic blue
339	33953	16	Hygienic blue

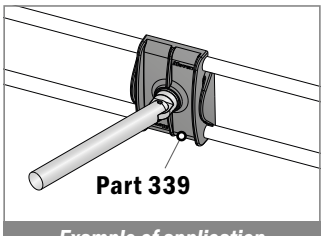

Example of application

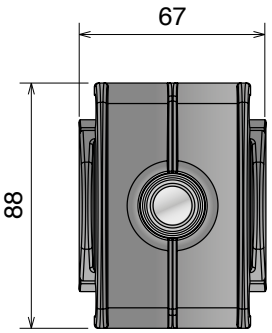

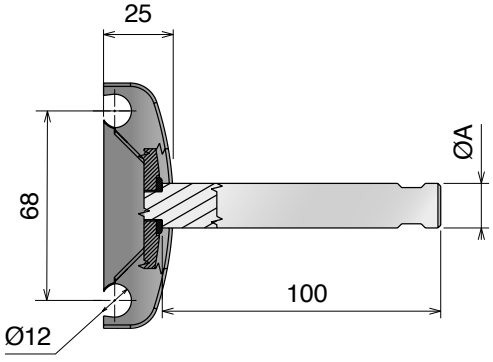

Materiale / *Material* / *Materialien:*
Acciaio inox / Stainless steel / Edelstahl

328 Morsetto singolo per guida laterale conica
Single clamp for conical side guide / Einfachklemme für konische Seitenführung

Delivery: Easy Standard — Used with Guide rail Pag 348

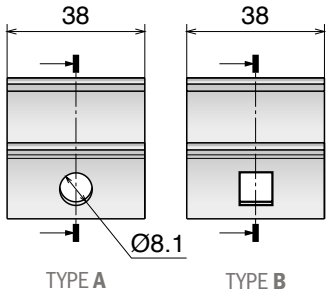

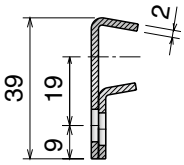

Part	Article-Nr.	Material	Type
328	32801	AISI 304	A
328	32802	AISI 304	B
328	32811	AISI 316	A

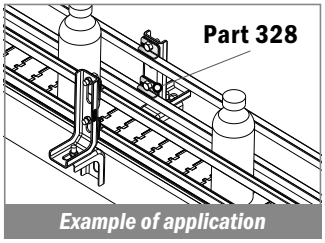

Example of application

329 Morsetto doppio per guida laterale conica
Double clamp for conical side guide / Doppelklemme für konische Seitenführung

Delivery: Easy Standard — Used with Guide rail Pag 348

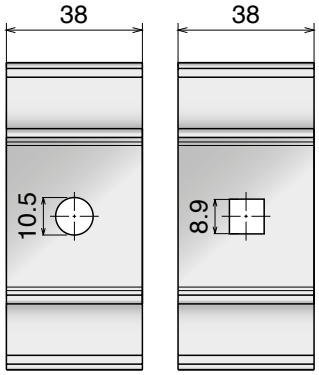

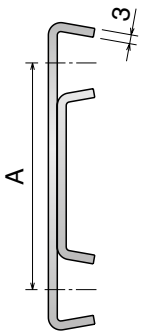

Part	Article-Nr.	A	Type
329	32904	50,0	A
329	32901	63,5	A
329	32902	82,55	A
329	32903	95,25	A
329	32911	63,5	B
329	32912	82,55	B
329	32913	95,25	B

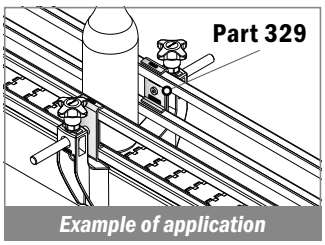

Example of application

330 Morsetto singolo per guida laterale conica
Single clamp for conical side guide / Einfachklemme für konische Seitenführung

Delivery: Easy Standard — Used with Guide rail Pag 348

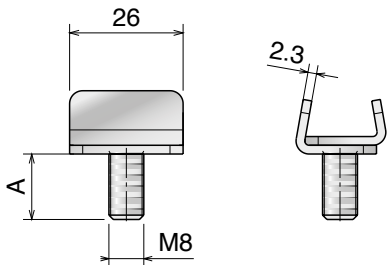

Part	Article-Nr.	A
330	33001	15
330	33003	20
330	33002	25
330	33004	30

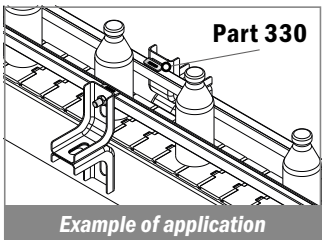

Example of application

390 Elemento di giunzione
Connecting element / Verbinder

Delivery: Easy Standard — Used with Guide rail Pag 348

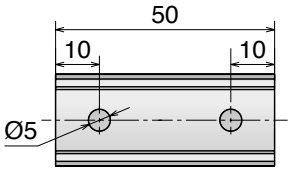

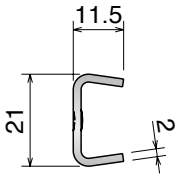

Part	Article-Nr.
390	39001

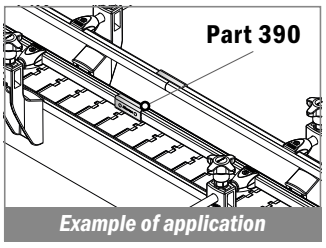

Example of application

Oadby Core product range
Oadby Available from stock in Leicester — Easy Available from stock in Italy — Standard Produced to order in Italy

Movex

392 Elemento di connessione
Connecting clamp / Verbindungsklemme

Delivery: Easy Standard Used with Guide rail Pag 348

Part	Article-Nr.	A
392	39201	75
392	39202	100
392	39203	150

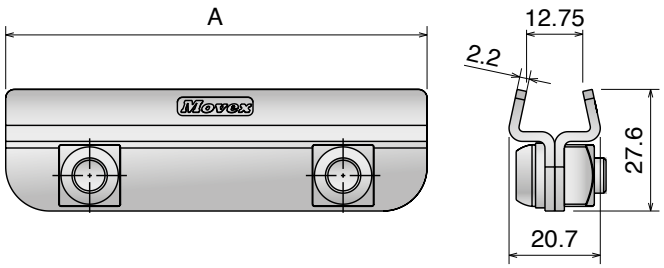

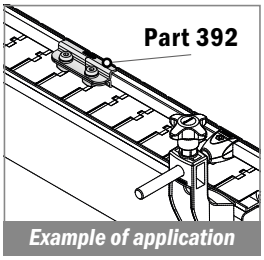

393 Elemento di connessione
Connecting clamp / Verbindungsklemme

Delivery: Easy Standard Used with Guide rail Pag 348

Part	Article-Nr.
393	39302

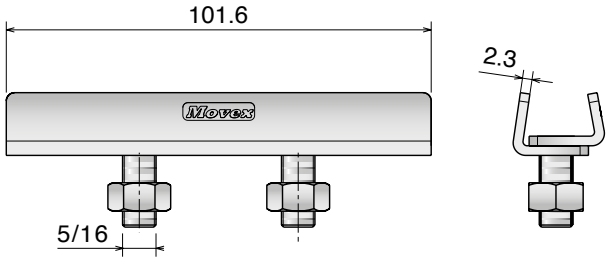

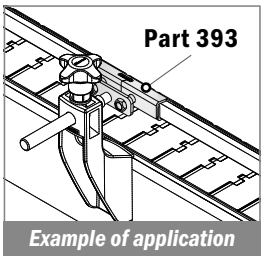

336 Morsetto regolabile guide coniche
Adjustable clamp for conical guide / verstellbare Klemme für konische Führungen

Delivery: Easy Standard Used with Guide rail Pag 348

Part	Article-Nr.
336	33601

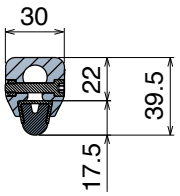

CLOSE

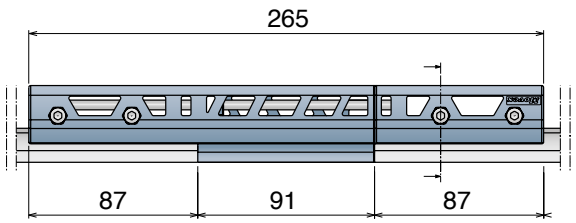

OPEN

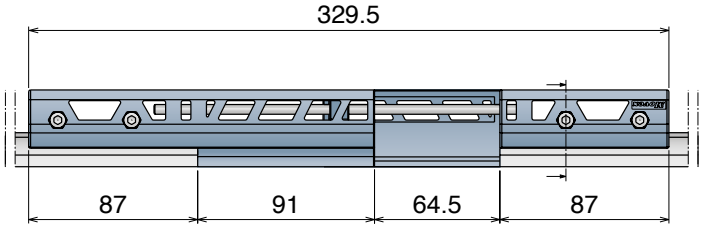

Materiale / *Material* / *Materialien:* Acciaio inox/*Stainless steel/Edelstahl*
Morsetto: PA/*Clamp: PA/Klemme: PA*
Vite, perno e rondella: Acciaio inox/*Screw, pin and washer: Stainless steel/Schraube, Bolzen und Scheibe: Edelstahl*
Dado: ottone nichelato/Nut: nickel plated brass/Mutter: Messing vernickelt

394 Morsetto di giunzione
Joint clamp / Verbindungsplatte

Delivery: Easy | Standard — **Used with Part 135/136** Pag 400

Part	Article-Nr.	A	B	C
394	39401	81,5	9	18
394	39402	90	8	17

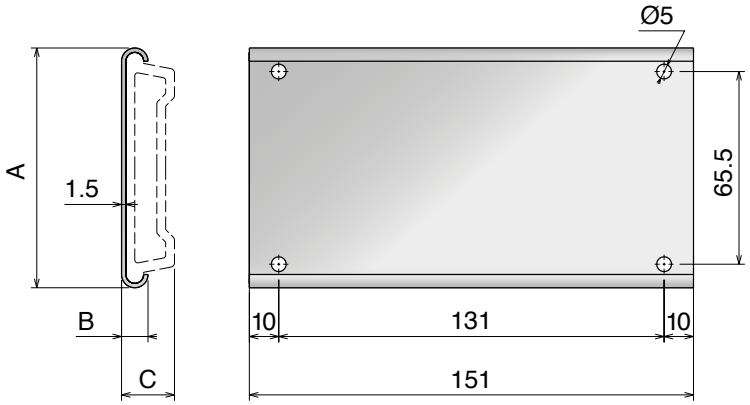

341 Morsetto
Clamp / Klemme

NOW ALSO IN HYGIENIC BLUE

Delivery: Easy | Standard — **Versions without pins don't include nuts and washer too**

Part	Article-Nr.	ØA	Colour
341	34101	without pin	Black
341	34102	12	Black
341	34103	16	Black
341	34151	without pin	Hygienic blue
341	34152	12	Hygienic blue
341	34153	16	Hygienic blue

TYPE **A**

Used with Part 136 Pag 400

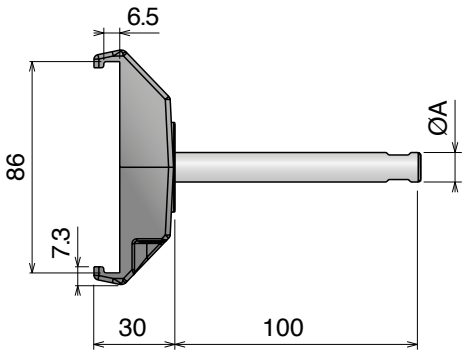

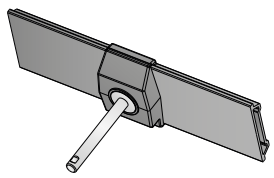

Suitable pins
Part 351/352 Pag 478-479

For straight application

NOW ALSO IN HYGIENIC BLUE

Part	Article-Nr.	ØA	Colour
341	34111	without pin	Black
341	34112	12	Black
341	34113	16	Black
341	34161	without pin	Hygienic blue
341	34162	12	Hygienic blue
341	34163	16	Hygienic blue

TYPE **B**

Used with Part 135 Pag 400

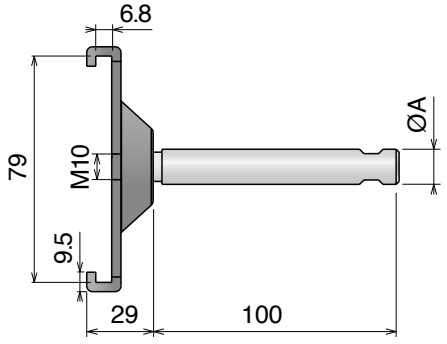

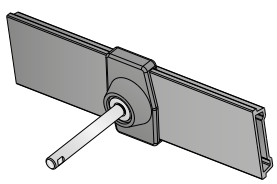

Suitable pins
Part 351/352 Pag 478-479

For straight application

Oadby Core product range
Oadby Available from stock in Leicester | Easy Available from stock in Italy | Standard Produced to order in Italy

Movex

3310 Morsetto acciaio inox
Clamp, stainless steel / Klemme, Edelstahl

Delivery: Easy **Standard** **Used with Part 135** Pag 400 - **Suitable pins Part 351/352** Pag 478-479

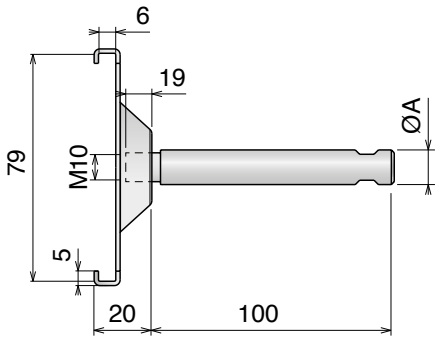

For straight application

Part	Article-Nr.	ØA
3310	33101	without pin
3310	33102	12
3310	33103	16

For curved application

Part	Article-Nr.	ØA
3310	33105	without pin
3310	33106	12
3310	33107	16

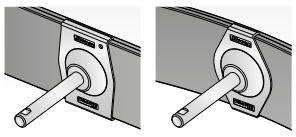

Used with Part 135 Pag 400

Example of application

3311 Morsetto acciaio inox
Clamp, stainless steel / Klemme, Edelstahl

Delivery: Easy **Standard** **Suitable pins Part 3004/3005** Pag 479

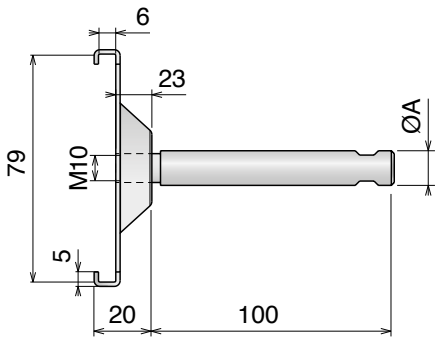

For straight application

Part	Article-Nr.	ØA
3311	33112	12
3311	33113	16

For curved application

Part	Article-Nr.	ØA
3311	33116	12
3311	33117	16

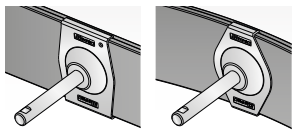

Used with Part:
187 Pag 409 - **189** Pag 407
193 Pag 405 - **1057** Pag 403
1075 Pag 408 - **1077** Pag 404
1078 Pag 404

Example of application

345 Morsetto acciaio inox
Clamp, stainless steel / Klemme, Edelstahl

Delivery: Easy **Standard** **Suitable pins Part 351/352** Pag 478-479

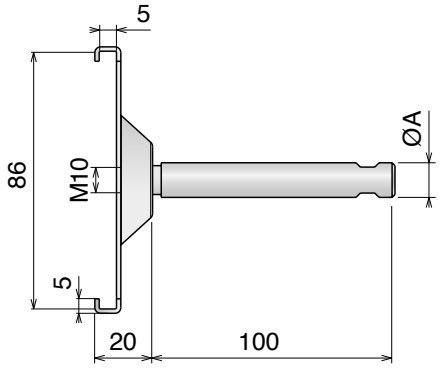

Part	Article-Nr.	ØA
345	34501	without pin
345	34502	12
345	34503	16

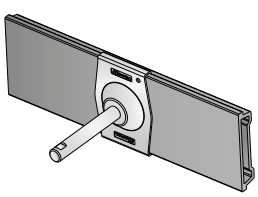

Used with Part 136 Pag 400

For straight application

Materiale / *Material / Materialien:*
Acciaio inox / Stainless steel / Edelstahl

349 Perno
Rod / Bolzen

Delivery: Easy Standard

Part	Article-Nr.	A
349	34901	80
349	34902	100
349	34903	150

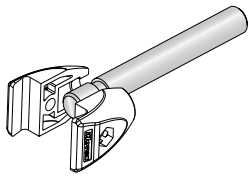

Used with Part:
324 Pag 470 - **337** Pag 473

Example of application

350 Perno
Rod / Bolzen

Delivery: Easy Standard

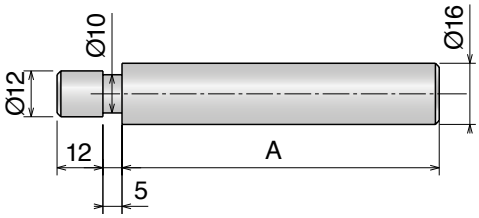

Part	Article-Nr.	A
350	35001	80
350	35002	100
350	35003	150

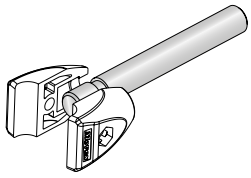

Used with Part:
324 Pag 470 - **337** Pag 473

Example of application

351 Perno
Rod / Bolzen

Delivery: Easy Standard

Part	Article-Nr.	A	B
351	35101	80	M10
351	35102	100	M10
351	35103	150	M10
351	35151	80	M8
351	35152	100	M8
351	35153	150	M8

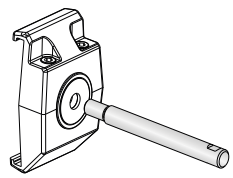

Used with Part:
341 Pag 476 - **345** Pag 477
3310 Pag 477

Example of application

Core product range
Available from stock in Leicester
Easy Available from stock in Italy
Standard Produced to order in Italy

Movex

NEW

3004 Perno
Rod / Bolzen

Delivery: Easy Standard

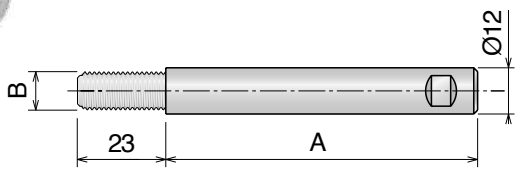

Part	Article-Nr.	A	B
3004	300401	80	M10
3004	300402	100	M10
3004	300403	150	M10
3004	300451	80	M8
3004	300452	100	M8
3004	300453	150	M8

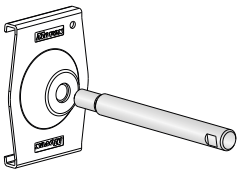

Used with Part:
3311 Pag 477

Example of application

352 Perno
Rod / Bolzen

Delivery: Easy Standard

Part	Article-Nr.	A	B
352	35201	80	M10
352	35202	100	M10
352	35203	150	M10
352	35251	80	M8
352	35252	100	M8
352	35253	150	M8

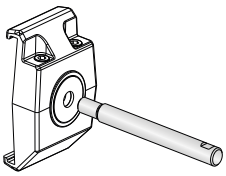

Used with Part:
341 Pag 476 **345** Pag 477
3310 Pag 477

Example of application

NEW

3005 Perno
Rod / Bolzen

Delivery: Easy Standard

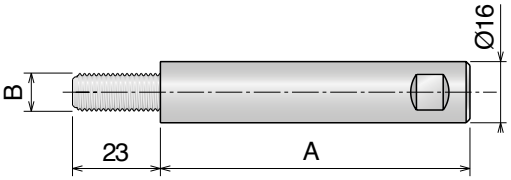

Part	Article-Nr.	A	B
3005	300501	80	M10
3005	300502	100	M10
3005	300503	150	M10
3005	300551	80	M8
3005	300552	100	M8
3005	300553	150	M8

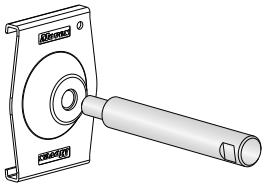

Used with Part:
3311 Pag 477

Example of application

Materiale / *Material / Materialien:*
Acciaio inox / Stainless steel / Edelstahl

347 Perno filettato femmina
Rod / Bolzen

Delivery: Easy Standard

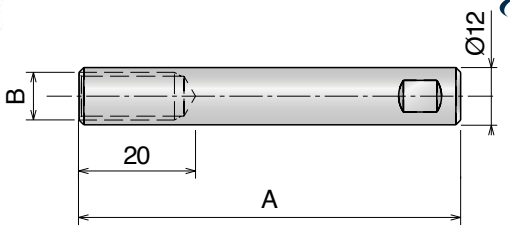

Part	Article-Nr.	A	B
347	34701	80	M10
347	34702	100	M10
347	34703	150	M10
347	34751	80	M8
Oadby 347	34752	100	M8
Oadby 347	34753	150	M8

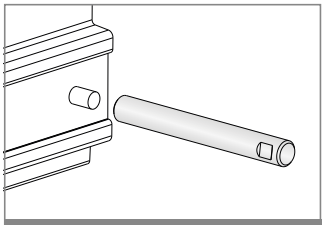
Example of application

348 Perno filettato femmina
Rod / Bolzen

Delivery: Easy Standard

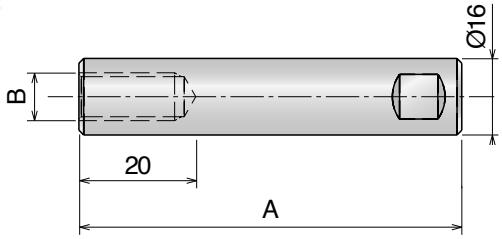

Part	Article-Nr.	A	B
348	34801	80	M10
348	34802	100	M10
348	34803	150	M10
348	34851	80	M8
348	34852	100	M8
348	34853	150	M8

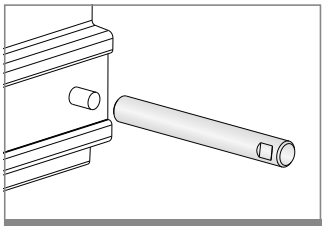
Example of application

346 Snodo
Joint rod adapter / Gelenk

Delivery: Easy Standard

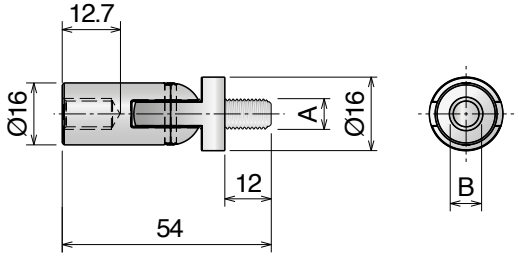

Part	Article-Nr.	A	B
346	34699	M8	M8
346	34602	M8	M10
346	34603	M10	M10

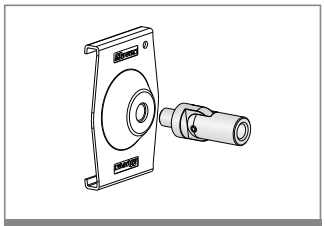
Example of application

Oadby Core product range
Oadby Available from stock in Leicester
Easy Available from stock in Italy
Standard Produced to order in Italy

Movex

356 Perno snodato
Jointed rods / Gelenkbolzen

Delivery: Easy Standard

Part	Article-Nr.	A
356	35601	80
356	35602	100
356	35603	150

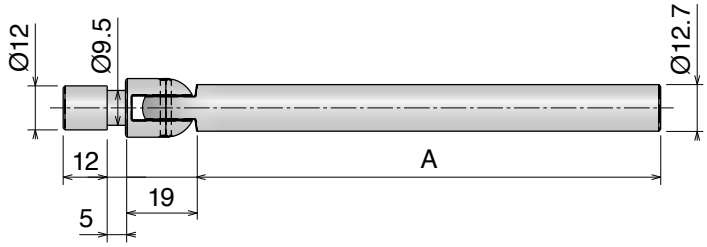

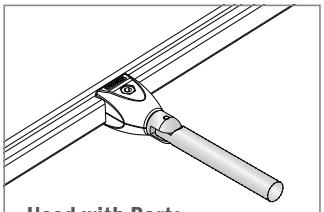

Used with Part:
324 Pag 470
337 Pag 473

Example of application

357 Perno snodato
Jointed rods / Gelenkbolzen

Delivery: Easy Standard

Part	Article-Nr.	A
357	35701	80
357	35702	100
357	35703	150

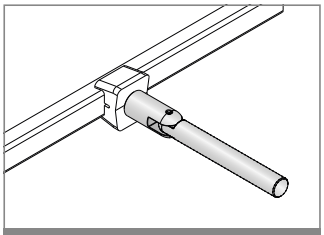

Example of application

NEW 3011 Cappucci terminali
End caps / Abdeckstopfen

Delivery: Easy Standard

Part	Article-Nr.	ØA	B	Colour	Type
3011	301101A	Ø12	12,3	Black	A
3011	301102A	Ø14	12,8	Black	A
3011	301103A	Ø16	16,4	Black	A
3011	301104A	Ø20	20,1	Black	A
3011	301101B	Ø12	20	Yellow	B
3011	301102B	Ø14	20	Yellow	B
3011	301103B	Ø16	20	Yellow	B
3011	301104B	Ø20	20	Yellow	B
3011	301101C	Ø12	20	Hygienic blue	C
3011	301102C	Ø14	20	Hygienic blue	C
3011	301103C	Ø16	20	Hygienic blue	C
3011	301104C	Ø20	20	Hygienic blue	C

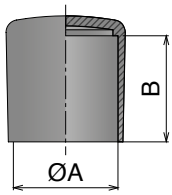

TYPE **A**

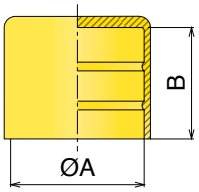

TYPE **B**

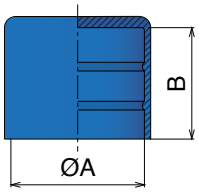

TYPE **C**

Materiale / *Material / Materialien:*
Polietilene HMW-PE/*Polyethylene HMW-PE/Polyethylen HMW-PE*
Rulli: resina acetalica o gomma SEBS/Rollers: Acetal Resin or SEBS rubber/Röllchen: Azetal oder SEBS gummi

335 Guide a rulli laterale
Roller guides / Röllchenführung

PATENTED

Max fixing load M8 screw: 15 N/m | **Minimum internal and external radius:** R305

TYPE **A**

Part	Article-Nr.	Type
335	33502	A

TYPE **B**

Part	Article-Nr.	Type
335	33504	B

TYPE **B1**

Part	Article-Nr.	Type
335	33506	B1

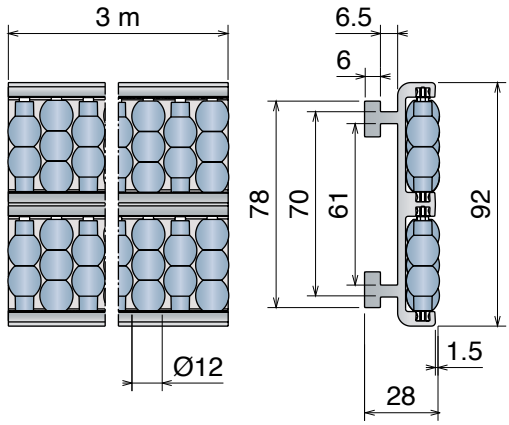

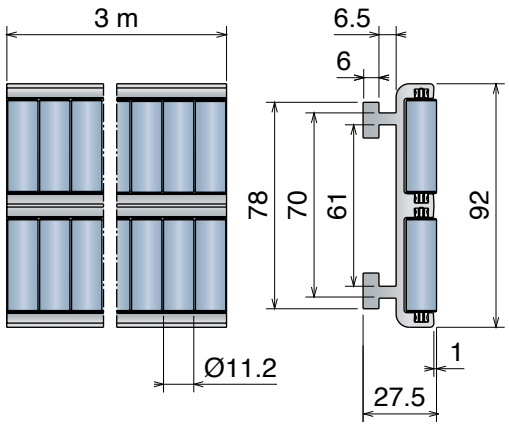

TYPE **B1**
Soft roller
SEBS rubber

Advantages:

- Noise reduction
- Improved product stability

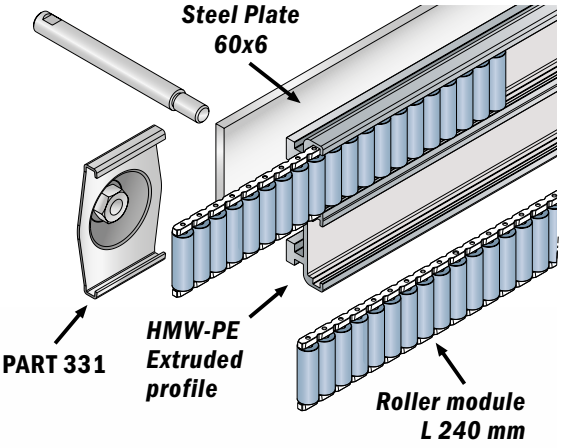

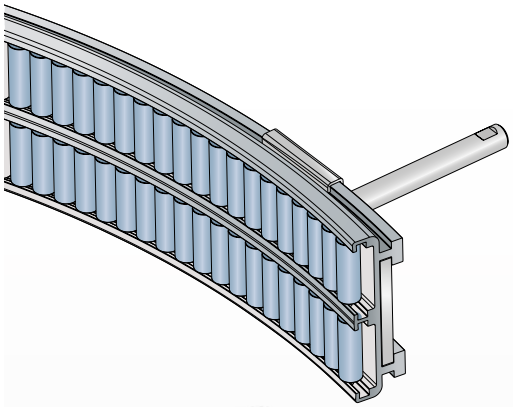

Available rollers for bending machine

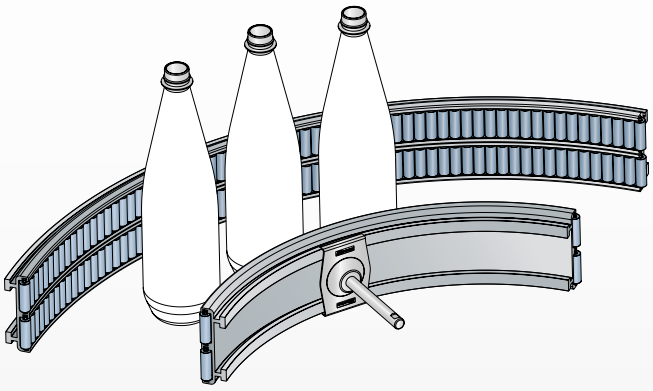

Oadby Core product range
Oadby Available from stock in Leicester
Easy Available from stock in Italy
Standard Produced to order in Italy

Movex

358 Guide a rulli laterale
Roller guides / Röllchenführung

Delivery: Easy | Standard **Max fixing load M8 screw:** 15 N/m

TYPE **A**

Part	Article-Nr.	Type
358	35802	A

TYPE **B**

Part	Article-Nr.	Type
358	35804	B

TYPE **B1**

Part	Article-Nr.	Type
358	35806	B1

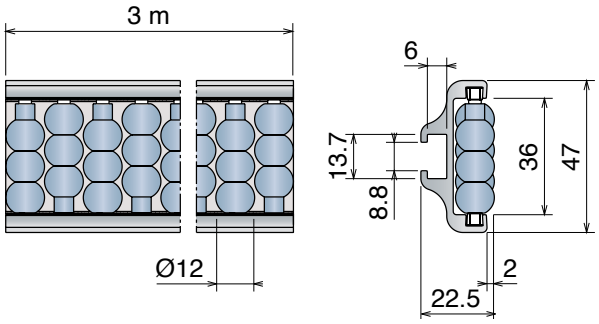

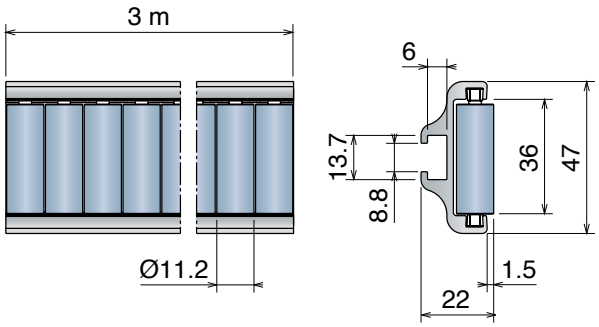

TYPE **B1**
Soft roller
SEBS rubber

Roller
Pag 425

Fixing screw:
M8 hex.head
or **PART 362**
Pag 493

Puntale / *Shoe / Einlaufschuh*

Part	Article-Nr.	Type
364	36401	fresato/machined/gefräst

Discover more options:
Pag 489/490

Materiale / *Material / Materialien:*
Guida: alluminio anodizzato/*Guide: anodized aluminum/Führung: eloxiertem Aluminium*
Rulli: resina acetalica o gomma SEBS/*Rollers: Acetal Resin or SEBS rubber/Röllchen: Azetal oder SEBS gummi*
Vite: Acciaio inox/Screw: Stainless steel/Schrauben: Edelstahl

359 Guide a rulli laterale
Roller guides / Röllchenführung

Delivery: Easy Standard **Max fixing load M8 screw:** 15 N/m

TYPE **A**

Part	Article-Nr.	Type
359	35902	A

TYPE **B**

Part	Article-Nr.	Type
359	35904	B

TYPE **B1**

Part	Article-Nr.	Type
359	35906	B1

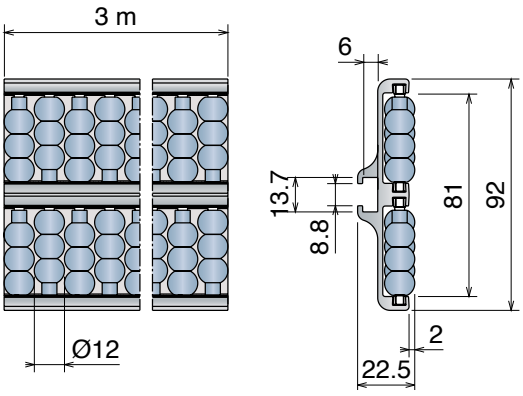

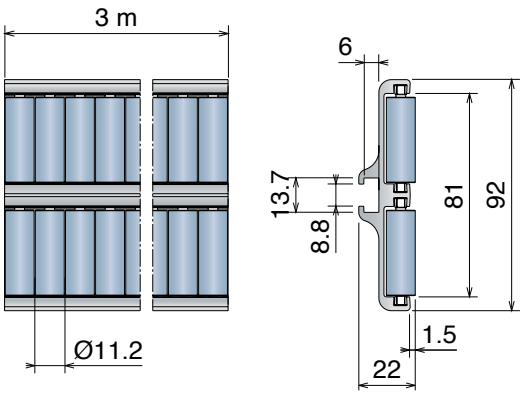

TYPE **B1**
Soft roller
SEBS rubber

Roller
Pag 425

Fixing screw:
M8 hex.head
or **PART 362**
Pag 493

Puntale / *Shoe / Einlaufschuh*

Part	Article-Nr.	Type
365	36501	fresato/machined/gefräst

Discover more options:
Pag 489/490

Oadby Core product range
Oadby Available from stock in Leicester
Easy Available from stock in Italy
Standard Produced to order in Italy

Movex

360 Guide a rulli intermedia
Roller guides / Röllchenführung

Delivery: Easy | Standard **Max fixing load M8 screw:** 15 N/m

TYPE **A**

Part	Article-Nr.	Type
360	36002	A

TYPE **B**

Part	Article-Nr.	Type
360	36004	B

TYPE **B1**

Part	Article-Nr.	Type
360	36006	B1

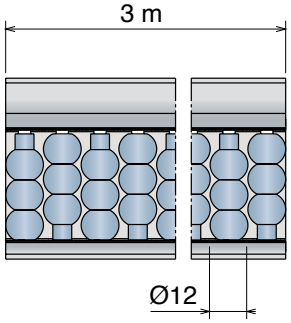

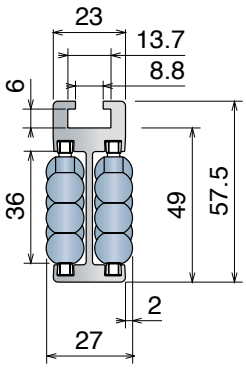

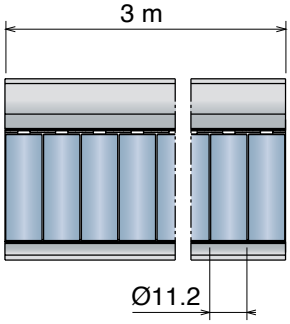

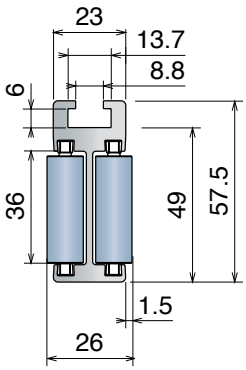

TYPE **B1**
Soft roller
SEBS rubber

Roller
Pag 425

Fixing screw:
M8 hex.head
or **PART 362**
Pag 493

Puntale / *Shoe / Einlaufschuh*

Part	Article-Nr.	Type
366	36601	fresato/machined/gefräst

Discover more options:
Pag 489/490

Materiale / *Material / Materialien:*
Guida: alluminio anodizzato/*Guide: anodized aluminum/Führung: eloxiertem Aluminium*
Rulli: resina acetalica o gomma SEBS/*Rollers: Acetal Resin or SEBS rubber /Röllchen: Azetal oder SEBS gummi*

360 Guide a rulli intermedia
Roller guides / Röllchenführung

REINFORCED VERSION

Max fixing load M8 screw: 15 N/m

TYPE **A**

Part	Article-Nr.	Type
360	36012	A

TYPE **B**

Part	Article-Nr.	Type
360	36014	B

TYPE **B1**

Part	Article-Nr.	Type
360	36016	B1

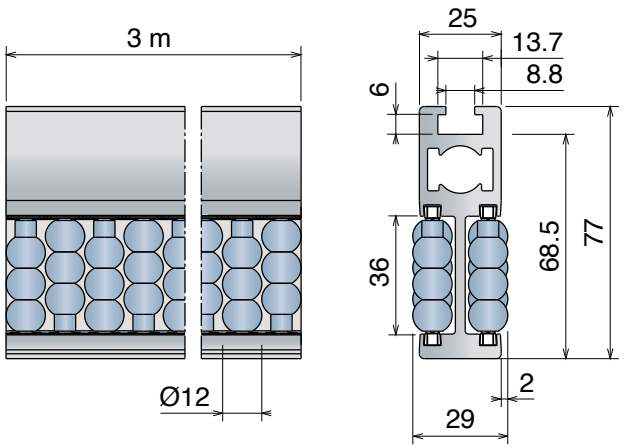

TYPE **B1**
Soft roller
SEBS rubber

Roller
Pag 425

Fixing screw:
M8 hex.head
or **PART 362**
Pag 493

Puntale / *Shoe / Einlaufschuh*

Part	Article-Nr.	Type
366	36601	fresato/machined/gefräst

Discover more options: Pag 489/490

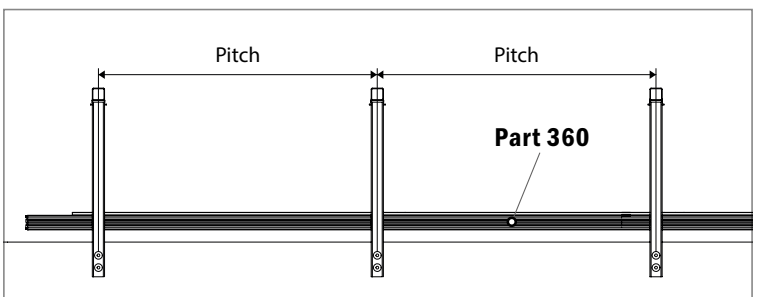

Part 360 Reinforced version is a reliable roller guides solution, the new robust design permits less support elements and allows higher pitches.

Example of application

Oadby Core product range
Oadby Available from stock in Leicester
Easy Available from stock in Italy
Standard Produced to order in Italy

Movex

361 Guide a rulli intermedia
Roller guides / Röllchenführung

Delivery: Easy | Standard **Max fixing load M8 screw:** 15 N/m

TYPE **A**

Part	Article-Nr.	Type
361	36102	A

TYPE **B**

Part	Article-Nr.	Type
361	36104	B

TYPE **B1**

Part	Article-Nr.	Type
361	36106	B1

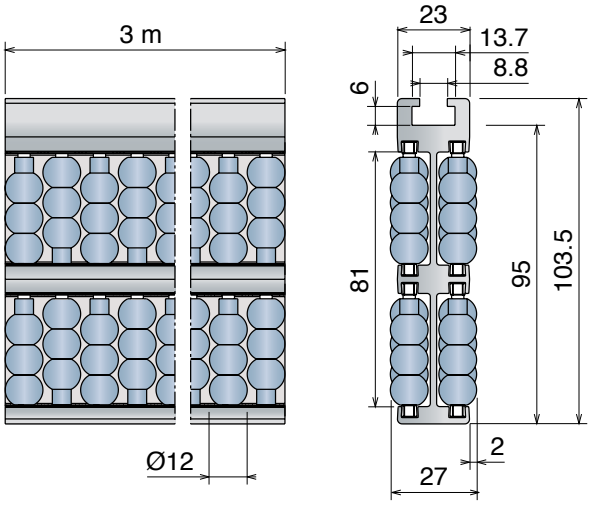

TYPE **B1**
Soft roller
SEBS rubber

Roller
Pag 425

Fixing screw:
M8 hex.head
or **PART 362**
Pag 493

Puntale / *Shoe / Einlaufschuh*

Part	Article-Nr.	Type
367	36701	fresato/machined/gefräst

Discover more options:
Pag 489/490

Materiale / *Material / Materialien:*
Guida: alluminio anodizzato/*Guide: anodized aluminum/Führung: eloxiertem Aluminium*
Rulli: resina acetalica o gomma SEBS/*Rollers: Acetal Resin or SEBS rubber /Röllchen: Azetal oder SEBS gummi*

361 Guide a rulli intermedia
Roller guides / Röllchenführung

REINFORCED VERSION

Delivery: Easy | Standard **Max fixing load M8 screw:** 15 N/m

TYPE **A**

Part	Article-Nr.	Type
361	36112	A

TYPE **B**

Part	Article-Nr.	Type
361	36114	B

TYPE **B1**

Part	Article-Nr.	Type
361	36116	B1

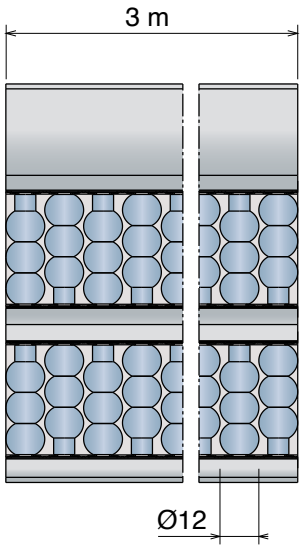

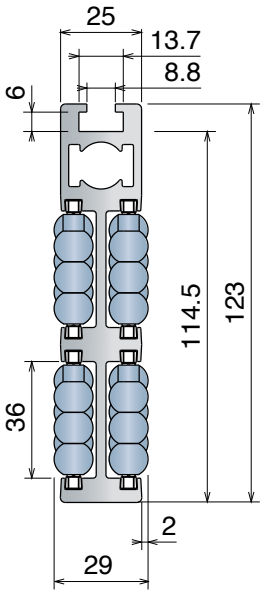

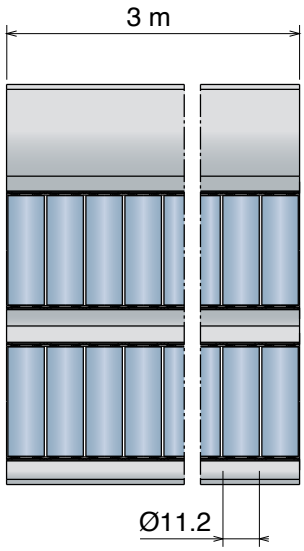

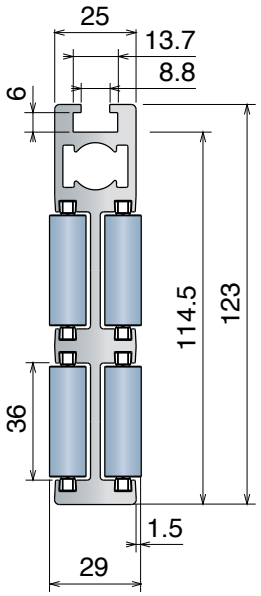

TYPE **B1**
Soft roller
SEBS rubber

Roller
Pag 425

Fixing screw:
M8 hex.head
or **PART 362**
Pag 493

Puntale / *Shoe / Einlaufschuh*

Part	Article-Nr.	Type
367	36701	fresato/machined/gefräst

Discover more options: Pag 489/490

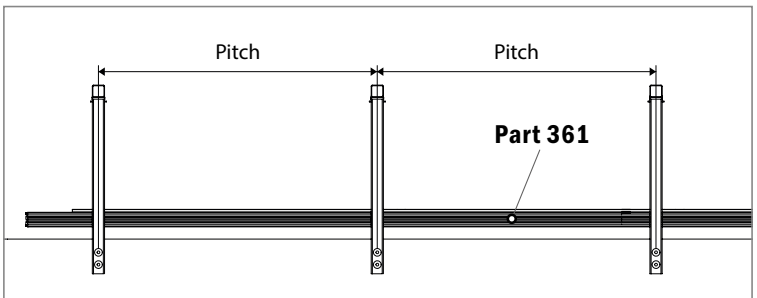

Part 361 Reinforced version is a reliable roller guides solution, the new robust design allows less support elements and wider pitches.

Example of application

Oadby Core product range
Oadby Available from stock in Leicester
Easy Available from stock in Italy
Standard Produced to order in Italy

Movex

Materiale / *Material / Materialien:*
Rulli: Resina acetalica / *Rollers: Acetal Resin / Röllchen: Azetal*
Grano: Acciaio inox/Grub Screws: Stainless steel/Gewindestift: Edelstahl
Dadi: ottone nichelato/Nuts: nickel plated brass/Mutter: Messing vernickelt

364 Puntale
Shoe / Einlaufschuh

Delivery: Easy | Standard — Part 364 it is designed to allow the possibility to shorten it, if necessary.

Part	Article-Nr.	Grub screw
364	36411	M6

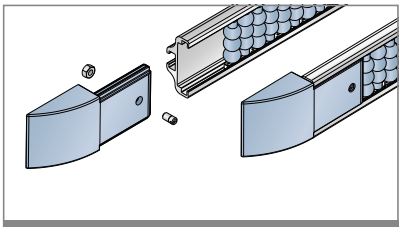

Example of application

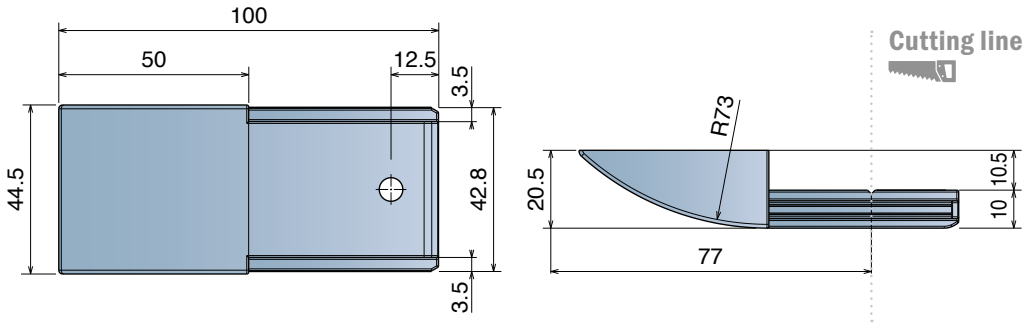

365 Puntale
Shoe / Einlaufschuh

Delivery: Easy | Standard — Part 365 it is designed to allow the possibility to shorten it, if necessary.

Part	Article-Nr.	Grub screw
365	36511	M6

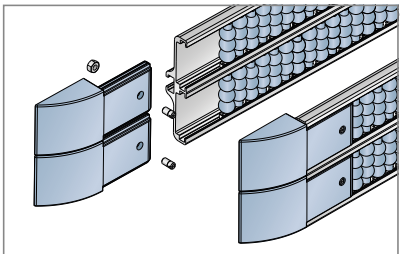

Example of application

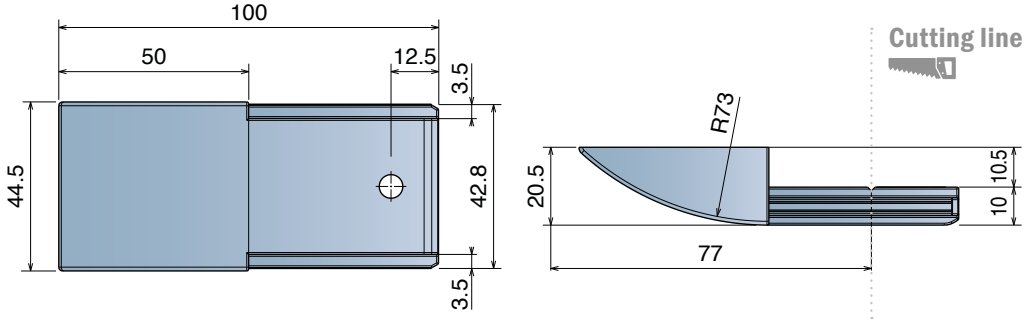

Materiale / *Material / Materialien:*
Rulli: Resina acetalica / *Rollers: Acetal Resin / Röllchen: Azetal*
Grano: Acciaio inox/Grub Screws: Stainless steel/Gewindestift: Edelstahl
Dadi: ottone nichelato/Nuts: nickel plated brass/Mutter: Messing vernickelt

366 Puntale
Shoe / Einlaufschuh

Delivery: **Easy** **Standard** Part 366 it is designed to allow the possibility to shorten it, if necessary.

Part	Article-Nr.	Grub screw
366	36611	M6

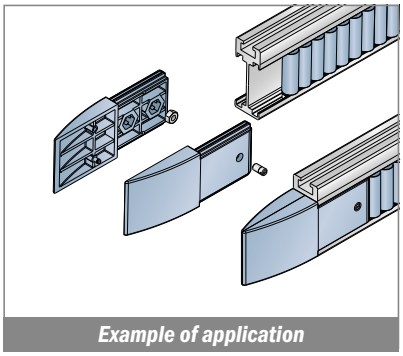

Example of application

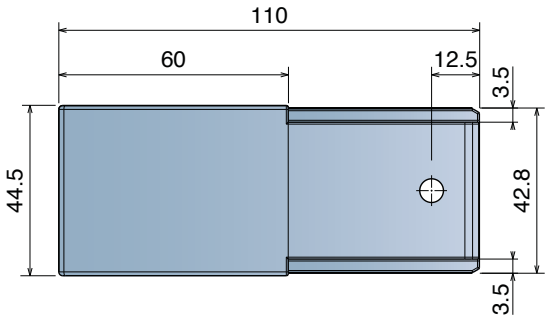

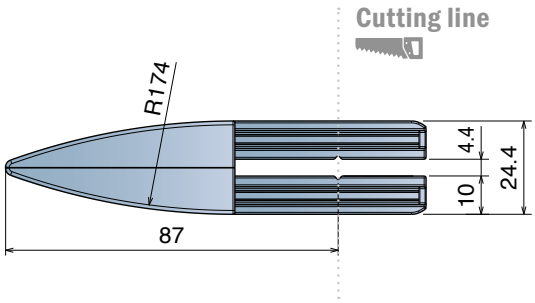

367 Puntale
Shoe / Einlaufschuh

Delivery: **Easy** **Standard** Part 367 it is designed to allow the possibility to shorten it, if necessary.

Part	Article-Nr.	Grub screw
367	36711	M6

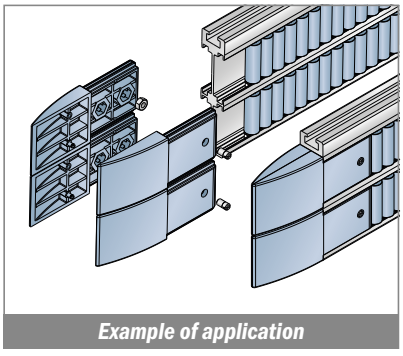

Example of application

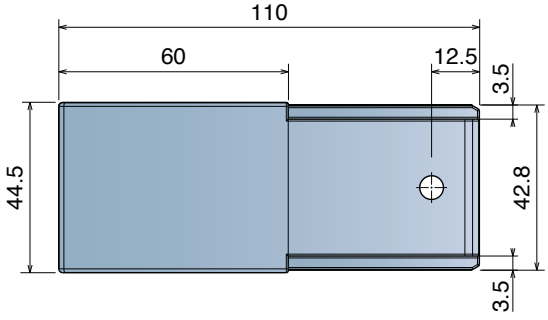

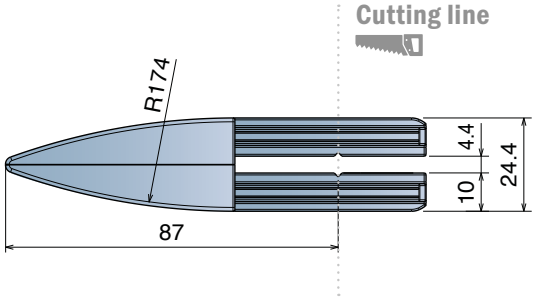

Oadby Core product range
Oadby Available from stock in Leicester
Easy Available from stock in Italy
Standard Produced to order in Italy

Movex

Materiale / *Material* / *Materialien:* Puntale: PE HD/*Shoe: PE HD/Corpus: PE HD*
Perni: acciaio inox/*Pins: SS/Bolzen: Edelstahl*
Rulli: resina acetalica o gomma SEBS/*Rollers: Acetal Resin or SEBS rubber*
Röllchen: Azetal oder SEBS gummi

366 Puntale centrale a rulli
Central roller shoe / Einlaufschuh

PATENTED

Part	Article-Nr.	Type
366	36621	A - Acetal resin roller
366	36622	B - Acetal resin roller
366	36623	B1 - Soft roller SEBS

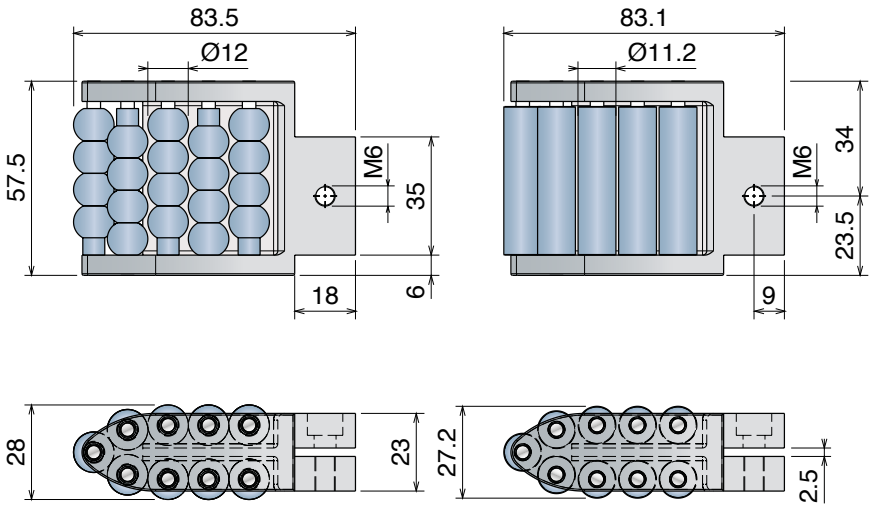

TYPE **A** TYPE **B** and **B1**

367 Puntale centrale a rulli
Central roller shoe / Einlaufschuh

PATENTED

Part	Article-Nr.	Type
367	36721	A - Acetal resin roller
367	36722	B - Acetal resin roller
367	36723	B1 - Soft roller SEBS

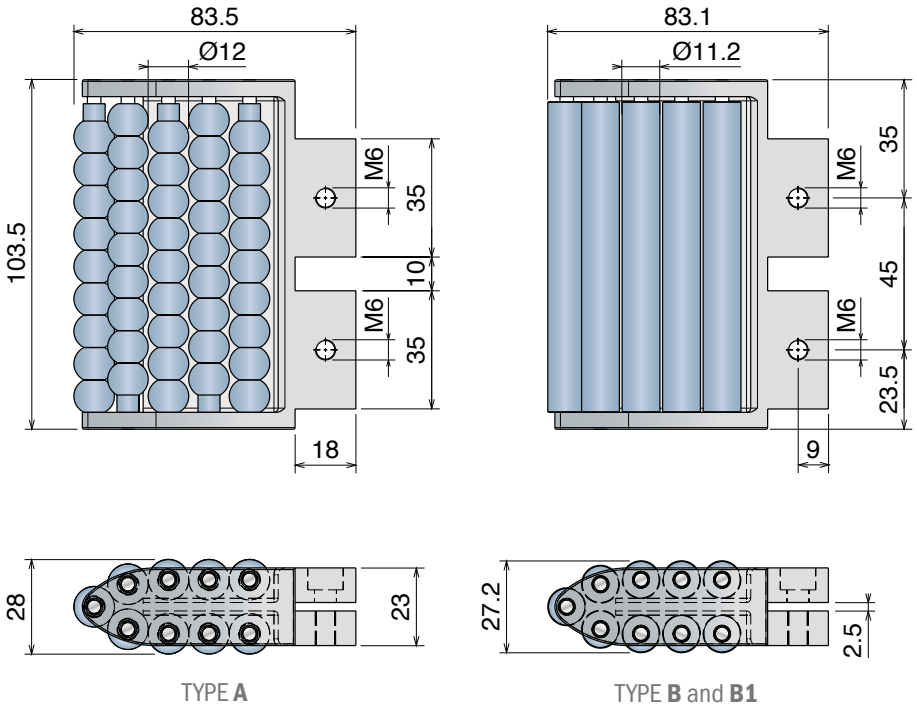

TYPE **A** TYPE **B** and **B1**

Materiale / *Material* / *Materialien:* Puntale: PE HD/*Shoe: PE HD/Corpus: PE HD*
Perni: acciaio inox/*Pins: SS/Bolzen: Edelstahl*
Rulli: resina acetalica o gomma SEBS/*Rollers: Acetal Resin or SEBS rubber*
Röllchen: Azetal oder SEBS gummi

364 Puntale laterale a rulli
Side roller shoe / Einlaufschuh

PATENTED

Part	Article-Nr.	Type
364	36421	A - Acetal resin roller
364	36422	B - Acetal resin roller
364	36423	B1 - Soft roller SEBS

TYPE **B1**
Soft roller
SEBS rubber

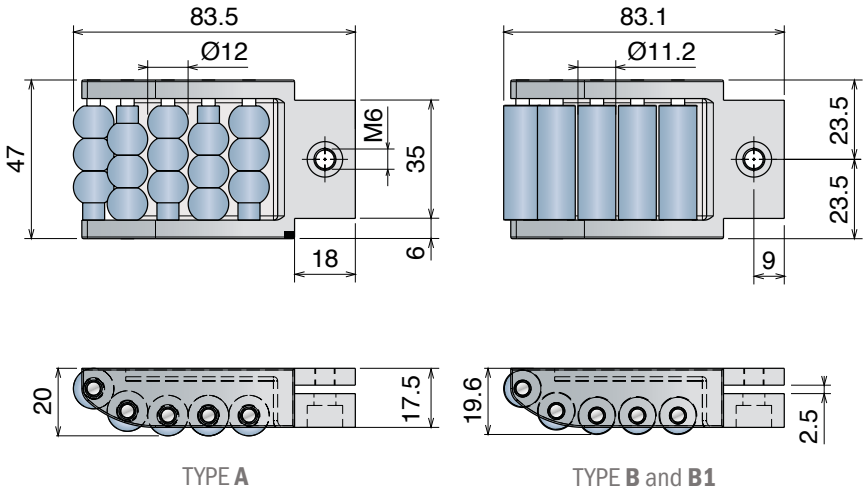

365 Puntale laterale a rulli
Side roller shoe / Einlaufschuh

PATENTED

Part	Article-Nr.	Type
365	36521	A - Acetal resin roller
365	36522	B - Acetal resin roller
365	36523	B1 - Soft roller SEBS

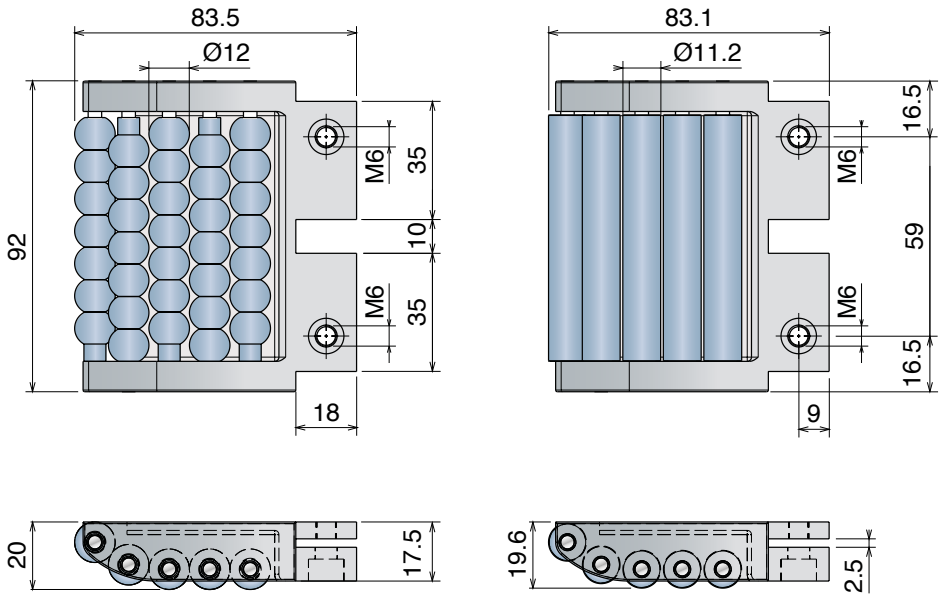

Oadby Core product range
Oadby Available from stock in Leicester
Easy Available from stock in Italy
Standard Produced to order in Italy

Movex

395 Guida laterale in PE
PE side guides / Seitenführung in PE

Part	Article-Nr.	L
395	39501	3 m

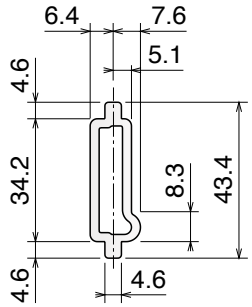

Example of application

362 Vite a "T"
T-bolt / T-Schraube

Delivery: Easy Standard — Used with Part 154/155/159/164/165/358/359/360/361/1055/1088/1089

Part	Article-Nr.	A
362	36201	16
362	36202	19
362	36203	25

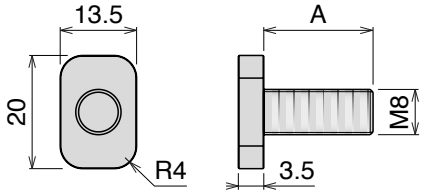

333 Elemento di giunzione
Connecting elements / Verbindungselement

Part	Article-Nr.
333	33301

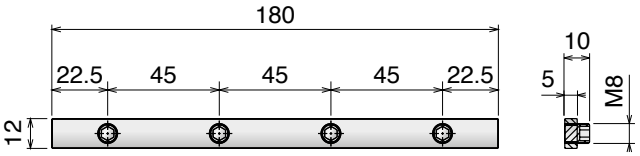

NEW

358/359/360/361 Guide in alluminio
Aluminum guides / Aluminiumführung

Part	Article-Nr.	Version	Min. radius	Supply	Profile cover
358	35800	Single-lateral	250	3 m	301405
359	35900	Double-lateral	500	3 m	301406
360	36000	Single-central	500	3 m	301407
361	36100	Double-central	750	3 m	301408

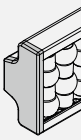

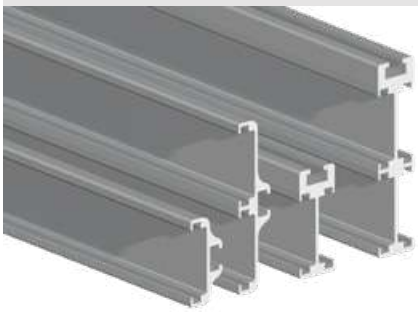

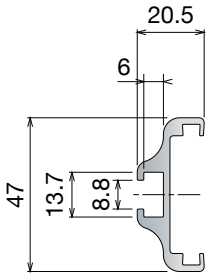

35800

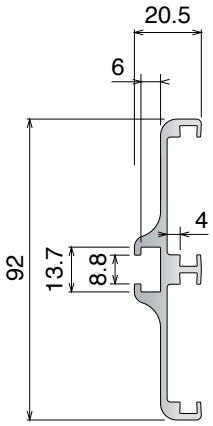

35900

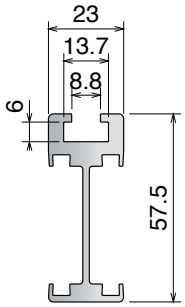

36000

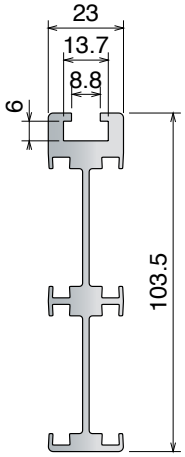

36100

Materiale / *Material* / *Materialien:* Rulli: resina acetalica/Rollers: Acetal Resin Röllchen: Azetal
Modulo di connessine: PA/Connection module: PA/Module: PA
Profilo metallico e viti: Acciaio inox/Metal Profile and screws: Stainless steel/U-Schiene und Schrauben: Edelstahl

353 Guide a rulli di accumulo
Accumulation roller guides / Stauröllchenführung

Delivery: Easy Standard

Part	Article-Nr.	A	Pin	Pin Ø
353	35301	1 m	PA	6 mm
353	35302	2 m	PA	6 mm
353	35303	3 m	PA	6 mm

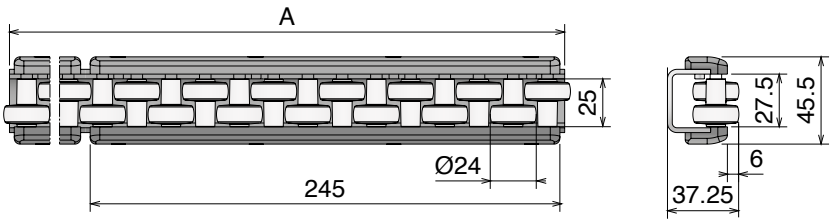

354 Guide a rulli di accumulo
Accumulation roller guides / Stauröllchenführung

Delivery: Easy Standard

Part	Article-Nr.	A	Pin	Pin Ø
354	35401	1 m	PA	6 mm
354	35402	2 m	PA	6 mm
354	35403	3 m	PA	6 mm

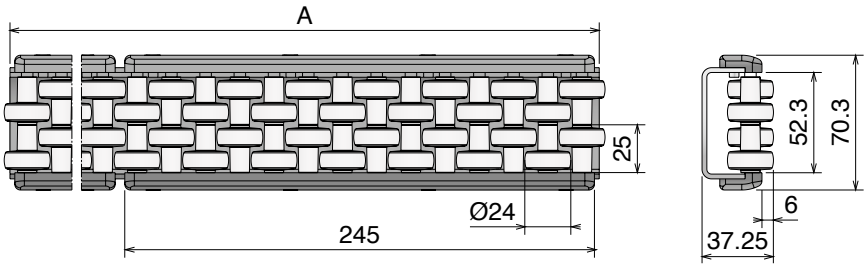

355 Guide a rulli di accumulo
Accumulation roller guides / Stauröllchenführung

Delivery: Easy Standard

Part	Article-Nr.	A	Pin	Pin Ø
355	35501	1 m	SS	6 mm
355	35502	2 m	SS	6 mm
355	35503	3 m	SS	6 mm

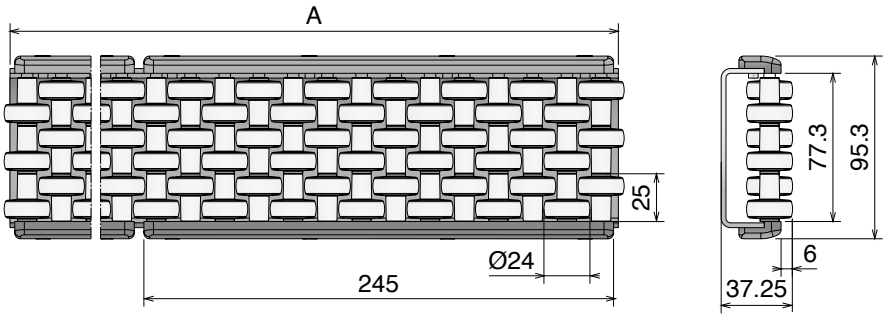

Core product range
Available from stock in Leicester
Easy Available from stock in Italy
Standard Produced to order in Italy

Material: Resina acetalica / *Acetal Resin / Azetal or* **BluLub**®
Polyethylene UHMW-PE *with reduced coefficient of friction and higher wear resistence.*
BluLub complies with the code of Federal Regulations of FDA. Linear expansion coefficient:
1.1x10⁻⁴ °F⁻¹ (2x10⁻⁴ °C⁻¹) Operating temperature: -40 to 176°F (-40 to +80°C)

363 Guida a rulli flessibile
Flexible roller guide / Flexible Röllchenführung

RANGE EXTENSION

Delivery: Easy Standard

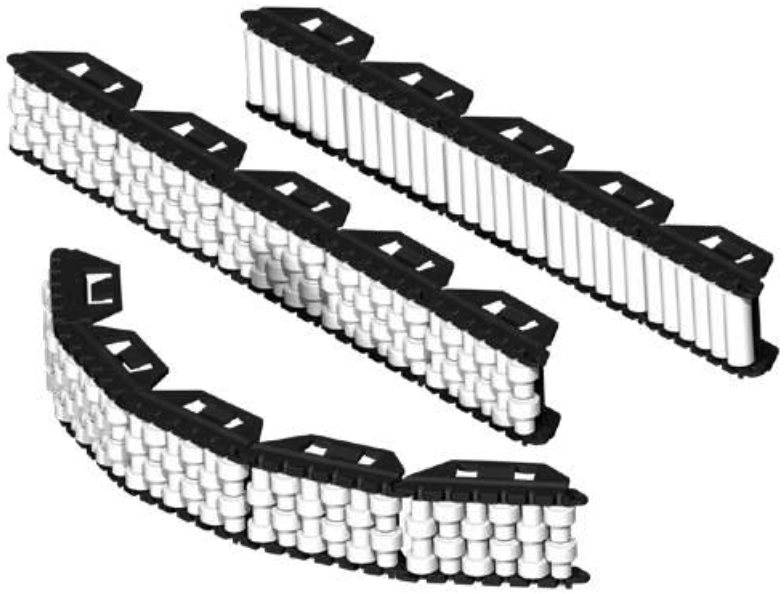

Part	Article-Nr.	Type	A	Colour
363	36301	A	8	White
363	36302	B	8	White
363	36303	A	10	White
363	36304	B	10	White
363	36305	A	8	BluLub
363	36306	A	10	BluLub

Try with...
BluLub® Rollers!

- Lower wear
- Noise reduction
- Improved product stability
- Lower coefficent of friction
- Less energy consumption

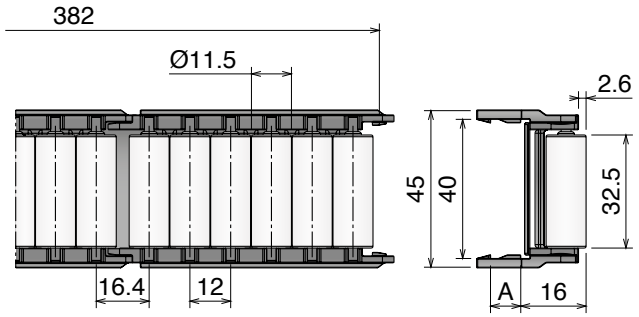

TYPE **A**

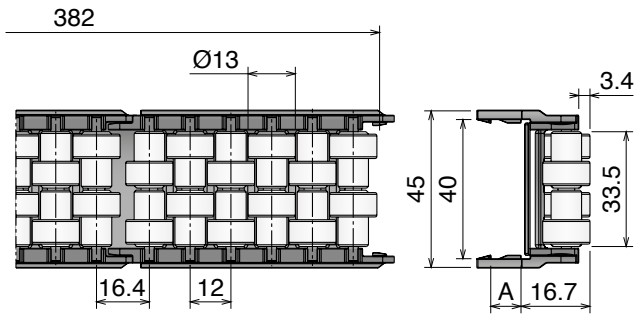

TYPE **B**

Curvature radius

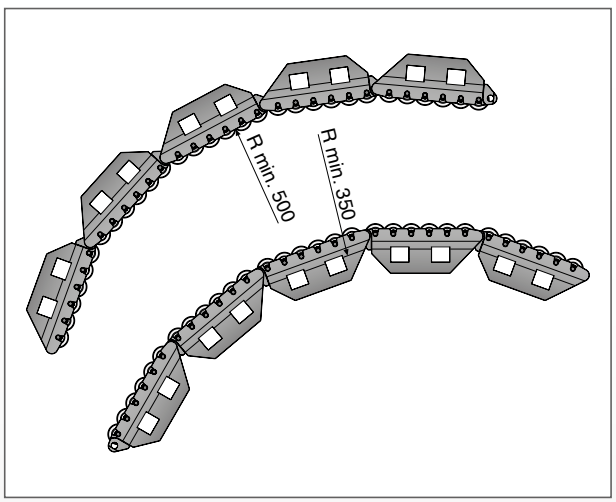

Fixing with plate and metal profile

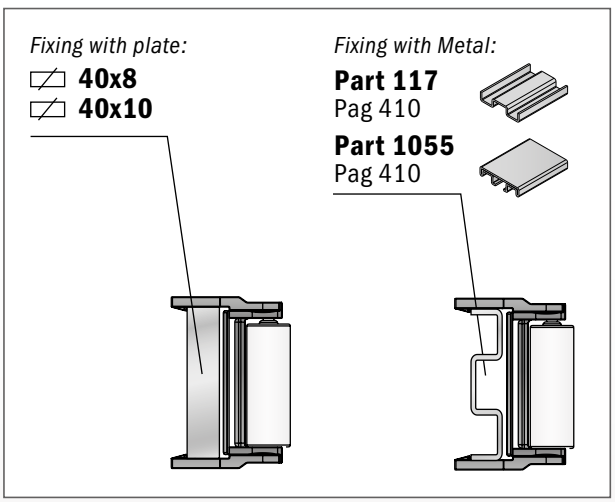

Material: *Resina acetalica / Acetal Resin / Azetal or* **BluLub**®
Polyethylene UHMW-PE with reduced coefficient of friction and higher wear resistence. BluLub complies with the code of Federal Regulations of FDA. Linear expansion coefficient: 1.1x10⁻⁴ °F⁻¹ (2x10⁻⁴ °C⁻¹) Operating temperature: -40 to 176°F (-40 to +80°C)

396 Guida a rulli flessibile
Flexible roller guide / Flexible Röllchenführung

RANGE EXTENSION

Delivery: Easy Standard

Part	Article-Nr.	Type	Colour
396	39601	A	White
396	39602	B	White
396	39603	A	BluLub

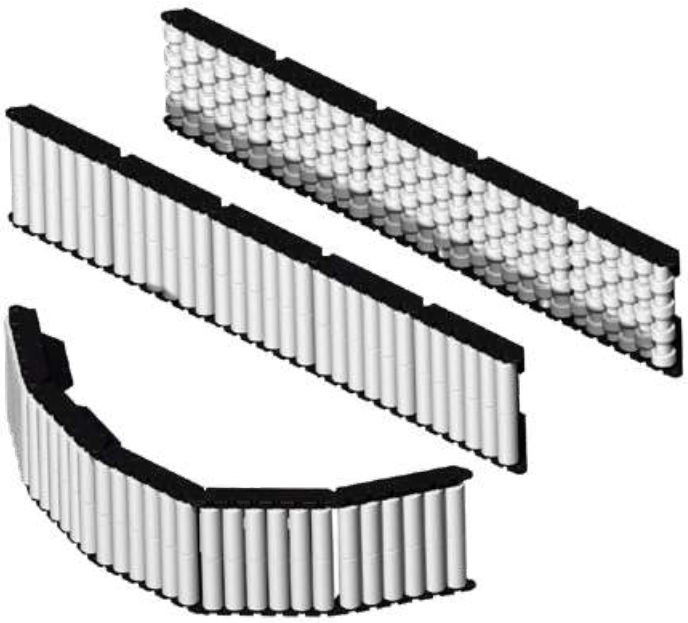

Try with...
BluLub® Rollers!

- Lower wear
- Noise reduction
- Improved product stability
- Lower coefficent of friction
- Less energy consumption

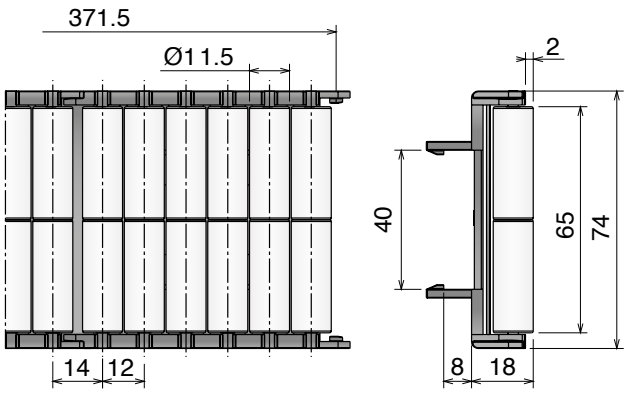

TYPE **A**

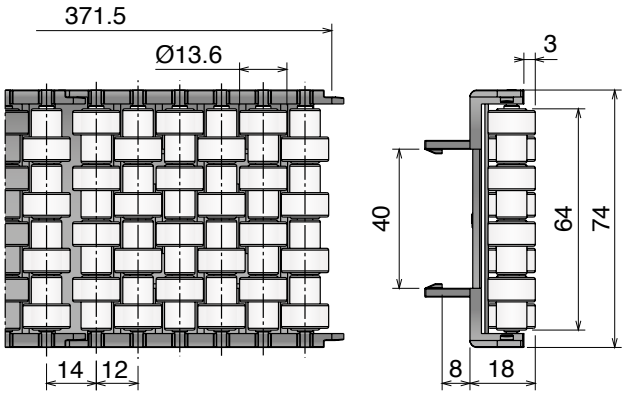

TYPE **B**

Curvature radius

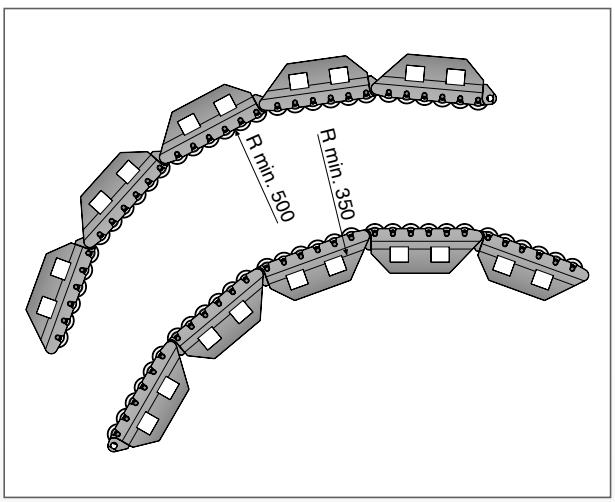

Fixing with plate and metal profile

Fixing with plate:
40x8

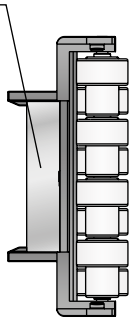

Fixing with Metal:
Part 117
Pag 410

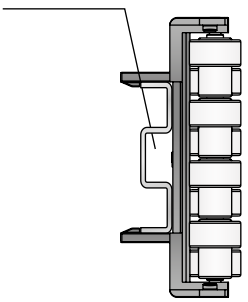

Core product range
Available from stock in Leicester
Easy Available from stock in Italy
Standard Produced to order in Italy

Movex®

Material: Resina acetalica / *Acetal Resin / Azetal or* **BluLub**®
Polyethylene UHMW-PE *with reduced coefficient of friction and higher wear resistence. BluLub complies with the code of Federal Regulations of FDA. Linear expansion coefficient: 1.1x10⁻⁴ °F⁻¹ (2x10⁻⁴ °C⁻¹) Operating temperature: -40 to 176 °F (-40 to +80 °C)*

363 Guida a rulli flessibile (centrale)
Flexible roller guide (Centre) / Flexible Röllchenführung (Zentral)

Delivery: Easy | Standard — **Can also be used with Part 117** Pag 410 - **Part 1055** Pag 410

Part	Article-Nr.	Type	For plate	Colour
363	36313	A	40x8	White
363	36311	B	40x10	White
363	36314	A	40x8	White
363	36312	B	40x10	White

TYPE **A**

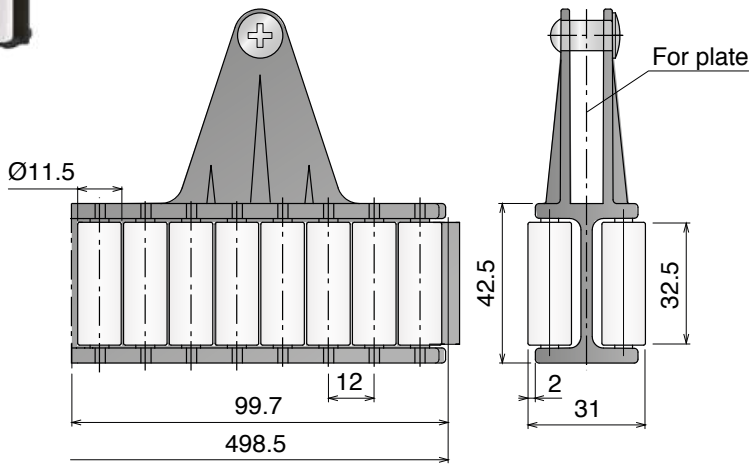

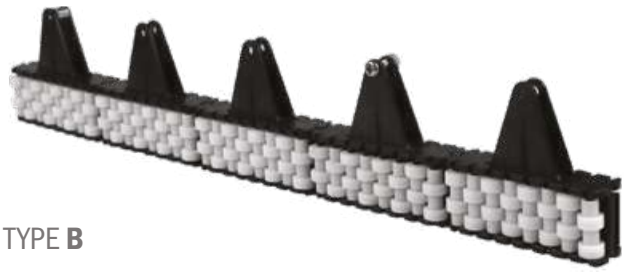

TYPE **B**

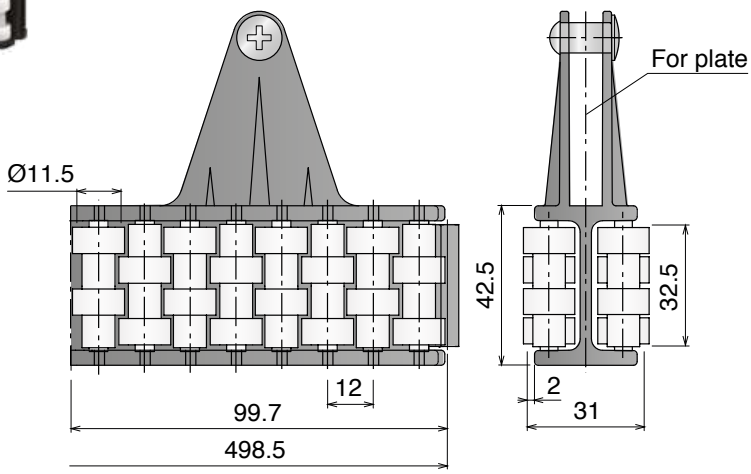

Puntale / *Shoe / Einlaufschuh*

Part	Article-Nr.	For Type
363	36399	A & B

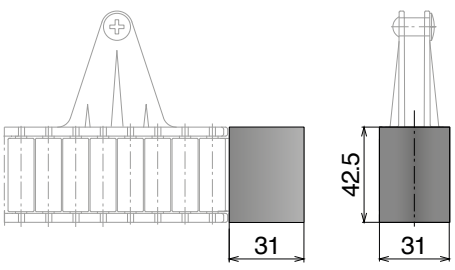

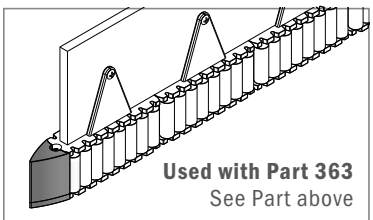

Example of application

Materiale / *Material / Materialien:*
Base: Alluminio/*Base: Aluminum/Grundplatte: Aluminium*
Parti di adattamento: Acciaio inox/*adapter parts: stainless steel*
Adaptertelle: Edelstahl

199/299

Blocco di montaggio catena
Chain mounting block / Kettenmontageblock

Delivery: Easy Standard

Part	Article-Nr.
199	19980

For steel chain:
812/815 (GT)
881 M (GT)
and plastic chain:
820 (GT)
831

Part	Article-Nr.
199	19981

For steel chain:
8157 (GT)
8857 M (GT/LBP)
and plastic chain:
8257 (GT/LBP)
8857 (GT/LBP)
882 Bevel

Part	Article-Nr.
199	19982

For steel chain:
812/815 (GT)
881 M (GT)
and plastic chain:
828 (GT/LBP)
880 M
880 Bevel
879 M
879 Bevel

Part	Article-Nr.
299	29978

For sideflexing belt/ chain:
260 M (FT/FG)
261 M (FT)

Disassembling mode:

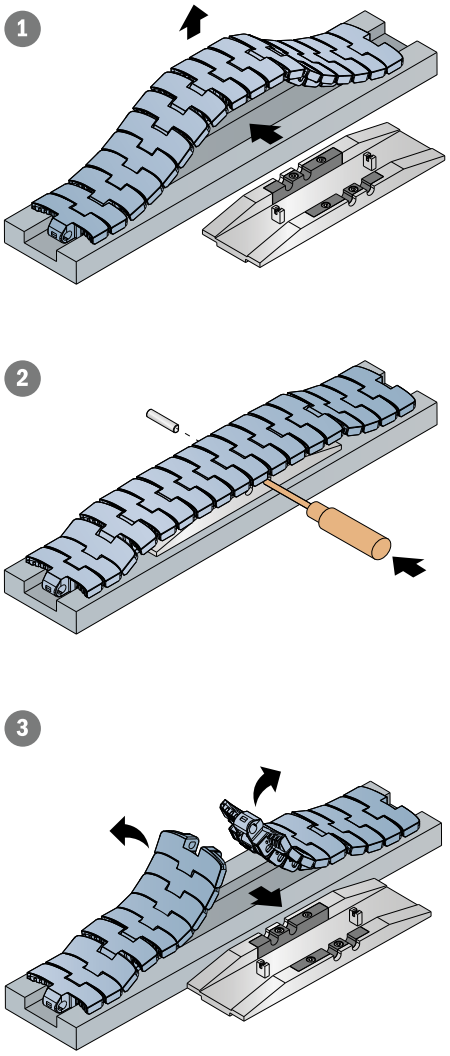

Assembling mode:

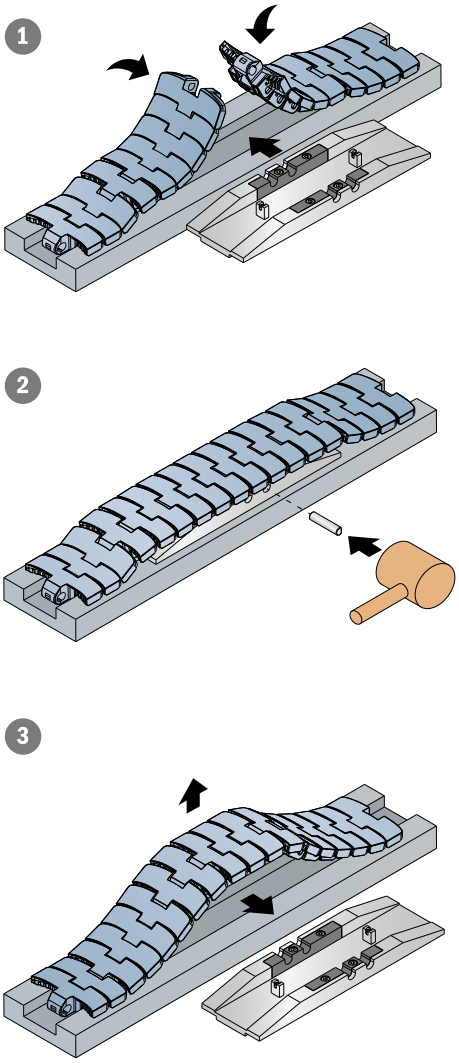

Oadby Core product range
Oadby Available from stock in Leicester
Easy Available from stock in Italy
Standard Produced to order in Italy

Movex®

Materiale / *Material / Materialien:*
Modulo: resina acetalica/*Module: acetal resin/Module: Azetal*
Perni, viti e dadi: Acciaio inox/*Pins, screws and nuts: Stainless steel/Bolzen, Schraube und Mutter: Edelstahl*
Rulli: resina acetalica o acciaio inox/*Rollers: acetal resin or stainless steel/Röllchen: Azetal oder Edelstahl*

368 Moduli di trasferimento L=85 mm
Transfer modules L=85 mm / Überschubmodul L=85 mm

NOW ALSO WITH PFX ROLLERS

Delivery: Easy Standard

Part	Article-Nr.	Type	Roller material
368	36801	A	Acetal resin
368	36802	B	Acetal resin
368	36803	C	Acetal resin
368	36801PFX	A	PFX
368	36802PFX	B	PFX
368	36803PFX	C	PFX
368	36801SS	A	Stainless steel
368	36802SS	B	Stainless steel
368	36803SS	C	Stainless steel

Smart roller
with mini bearings
in stainless steel

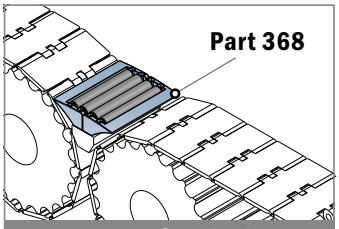

Example of application

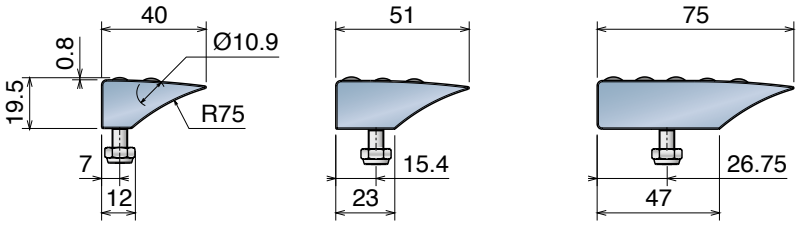

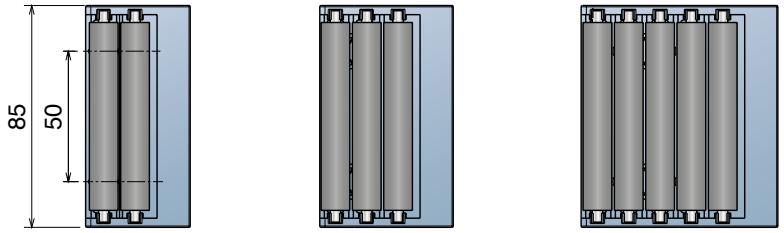

TYPE **A** TYPE **B** TYPE **C**

369 Moduli di trasferimento L=115 mm
Transfer modules L=115 mm / Überschubmodul L=115 mm

NOW ALSO WITH PFX ROLLERS

Delivery: Easy Standard

Part	Article-Nr.	Type	Roller material
369	36901	A	Acetal resin
369	36902	B	Acetal resin
369	36903	C	Acetal resin
369	36901PFX	A	PFX
369	36902PFX	B	PFX
369	36903PFX	C	PFX
369	36901SS	A	Stainless steel
369	36902SS	B	Stainless steel
369	36903SS	C	Stainless steel

Smart roller
with mini bearings
in stainless steel

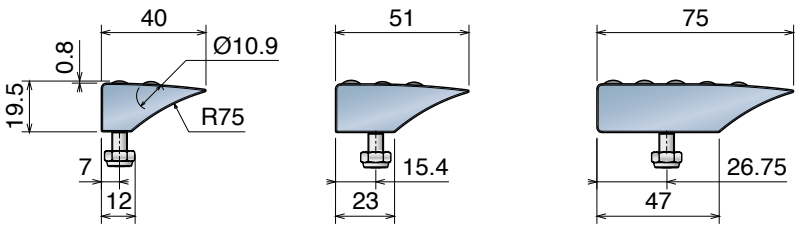

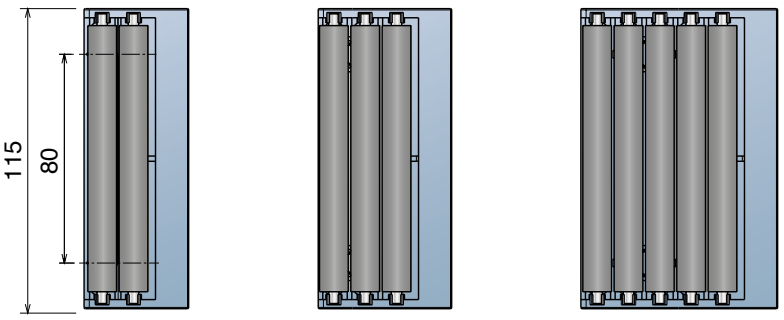

TYPE **A** TYPE **B** TYPE **C**

Materiale / *Material / Materialien:*
Modulo: resina acetalica/*Module: acetal resin/Module: Azetal*
Perni, viti e dadi: Acciaio inox/*Pins, screws and nuts: Stainless steel/Bolzen, Schraube und Mutter: Edelstahl*
Rulli: resina acetalica o acciaio inox/*Rollers: acetal resin or stainless steel/Rollen: Azetal oder Edelstahl*

370

Moduli di trasferimento L=85 mm
Transfer modules L=85 mm / Überschubmodul L=85 mm

NOW ALSO WITH PFX ROLLERS

Delivery: Easy Standard

Part	Article-Nr.	Type	Roller material
370	37001	A	Acetal resin
370	37002	B	Acetal resin
370	37003	C	Acetal resin
370	37001PFX	A	PFX
370	37002PFX	B	PFX
370	37003PFX	C	PFX

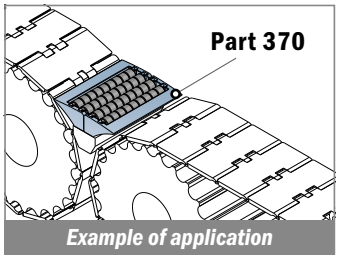

Example of application

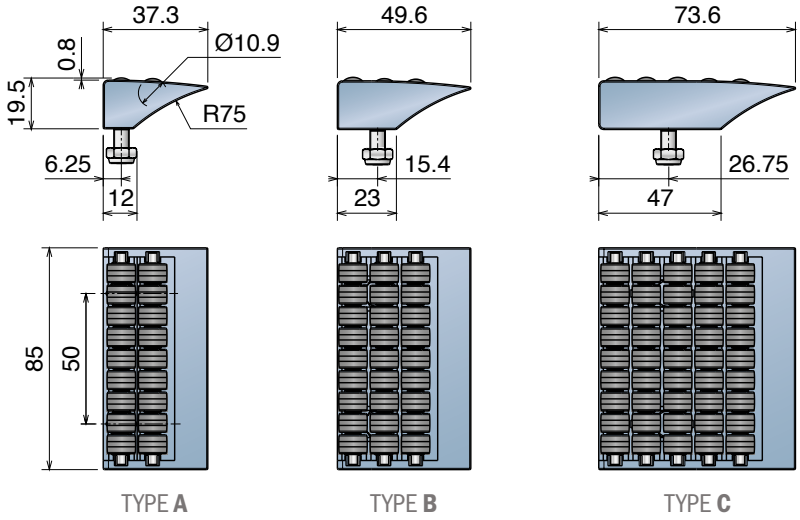

TYPE **A** TYPE **B** TYPE **C**

371

Moduli di trasferimento L=115 mm
Transfer modules L=115 mm / Überschubmodul L=115 mm

NOW ALSO WITH PFX ROLLERS

Delivery: Easy Standard

Part	Article-Nr.	Type	Roller material
371	37101	A	Acetal resin
371	37102	B	Acetal resin
371	37103	C	Acetal resin
371	37101PFX	A	PFX
371	37102PFX	B	PFX
371	37103PFX	C	PFX

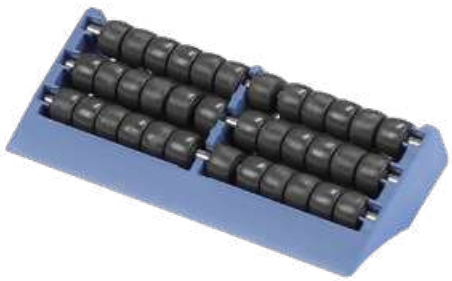

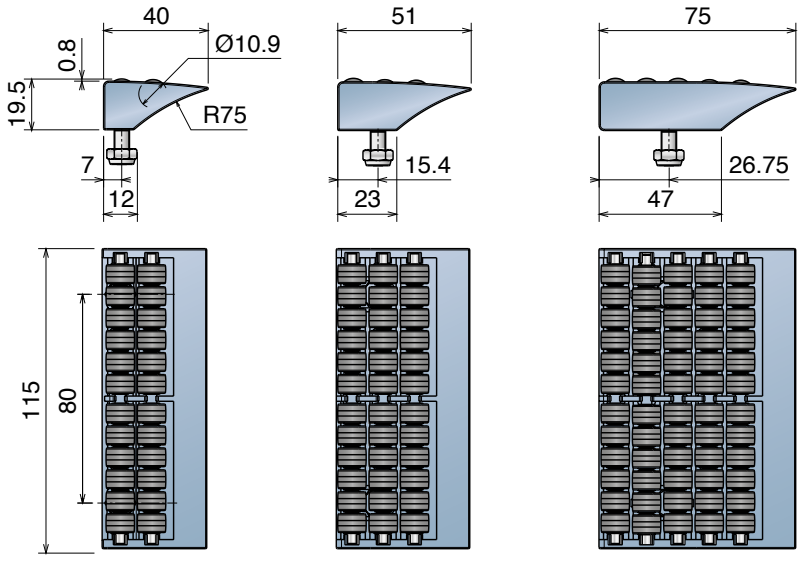

TYPE **A** TYPE **B** TYPE **C**

Core product range
Available from stock in Leicester
Easy Available from stock in Italy
Standard Produced to order in Italy

Movex®

342 Moduli di trasferimento L=200 mm
Transfer modules L=200 mm / Überschubmodul L=200 mm

RANGE EXTENSION

Part	Article-Nr.	Type	Material
370	34201	A	BluLub
370	34201N	B	BluLub
370	34201NL	C	BluLub
370	34201S	A	PE Black
370	34201NS	B	PE Black
370	34201NLS	C	PE Black

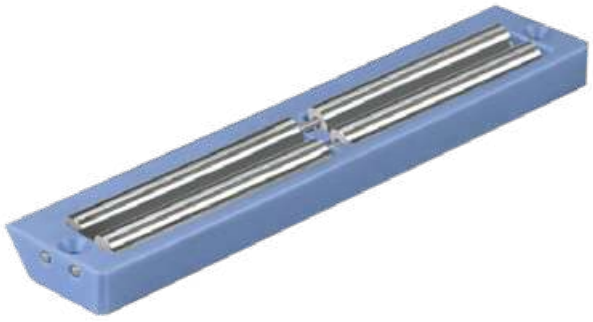

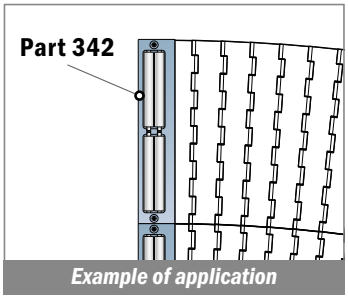

Example of application

Smart roller
with mini bearings
in stainless steel

Advantages:
- Machined transfer
- High precision
- Solid structure
- Easy to install

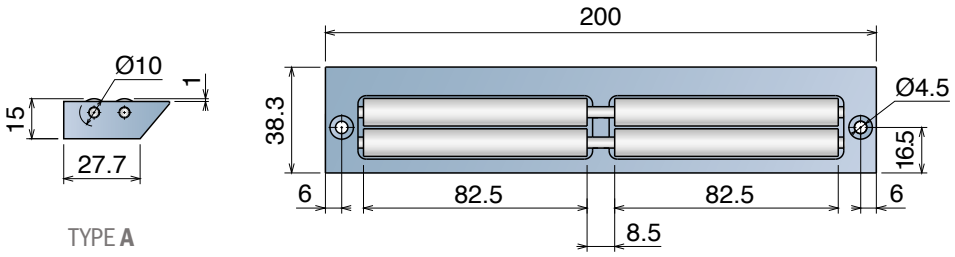

TYPE **A**

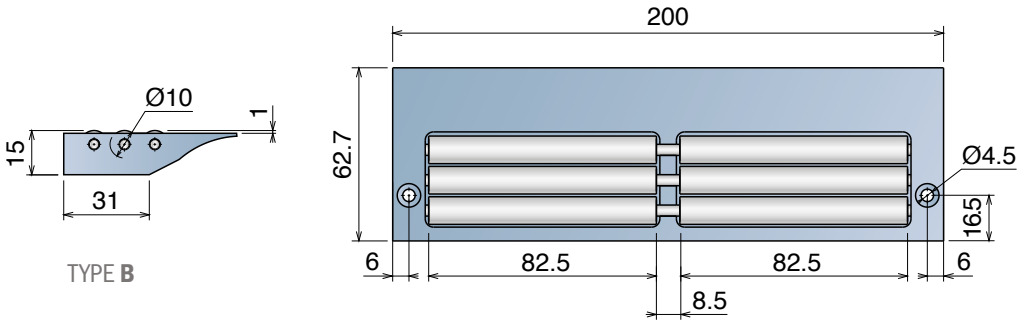

TYPE **B**

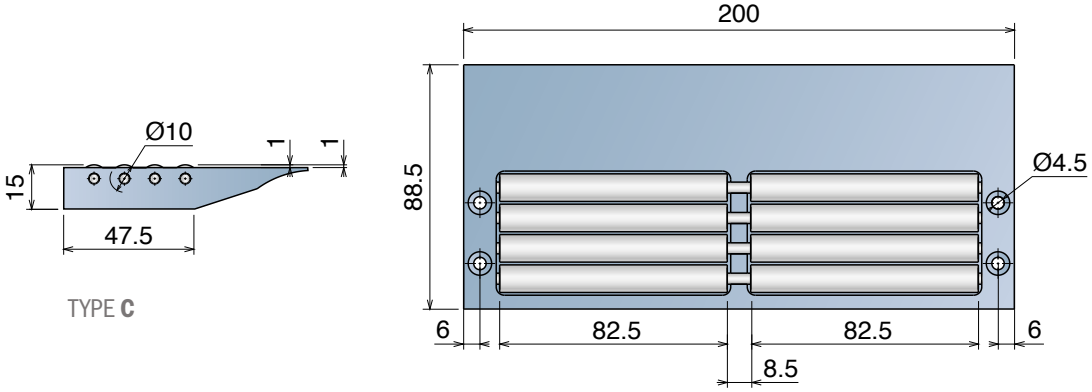

TYPE **C**

Materiale / *Material* / *Materialien:*
Part. 372-373 Cerniera: Poliammide/Hinges: Polyamide/Scharnier: Polyamid
Perni: Acciaio inox/Pins: Stainless steel/Bolzen: Edelstahl
Part. 383 Cerniera: Poliammide/*Hinges: Polyamide/Scharnier: Polyamid*

372 Cerniera
Hinge / Scharnier

NOW ALSO IN HYGIENIC BLUE

Delivery: Easy Standard

Part	Article-Nr.	A	B	C	D	E	Colour
372	37201	11	14	10,5	6,5	6	Black
372	37202	11	14	13,5	8,5	8	Black
372	37203	18	21	13,5	8,5	8	Black
372	37211	11	14	10,5	6,5	6	Hygienic blue
372	37212	11	14	13,5	8,5	8	Hygienic blue
372	37213	18	21	13,5	8,5	8	Hygienic blue

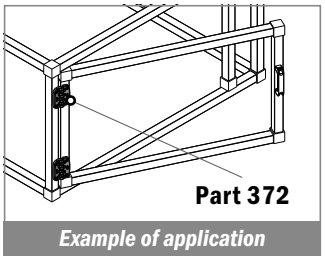

Example of application

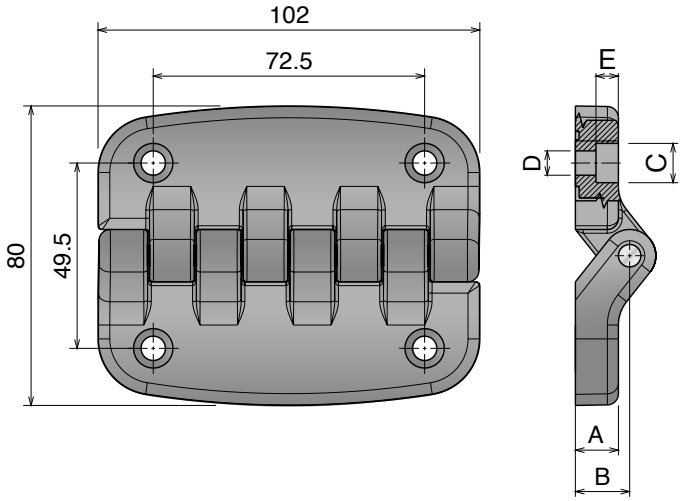

373 Cerniera
Hinge / Scharnier

Delivery: Easy Standard

Part	Article-Nr.	C	D	E
373	37301	10,5	6,5	6
373	37302	13,5	8,5	4

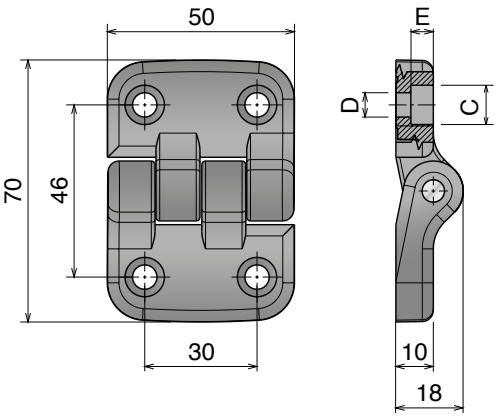

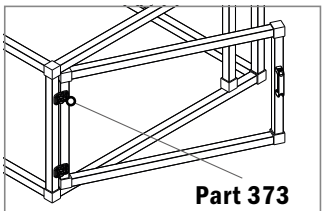

Example of application

383 Cerniera
Hinge / Scharnier

Delivery: Easy Standard

Part	Article-Nr.	A	B	C	ØD	ØE	F	G
383	38301	24	25	14,5	4,5	14	44,6	41
383	38302	36	36	20,8	6,5	20	62,5	58

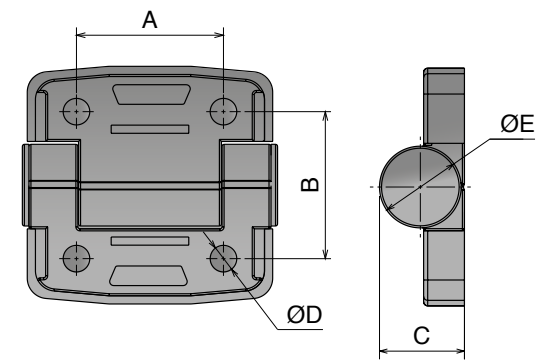

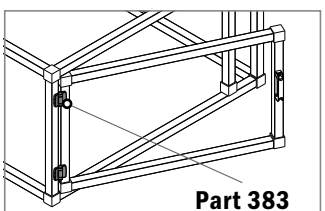

Example of application

Oadby Core product range
Oadby Available from stock in Leicester
Easy Available from stock in Italy
Standard Produced to order in Italy

384 Cerniera Acciaio Inox
SS Hinge / Edelstahl Scharnier

Stainless Steel | AISI 304

Delivery: Easy Standard

Part	Article-Nr.	A	B	C	ØD	ØE	F	G
384	38401	20	32,5	4,3	5,5	10,5	40	51
384	38402	30	41	5	6,5	12,5	60	71

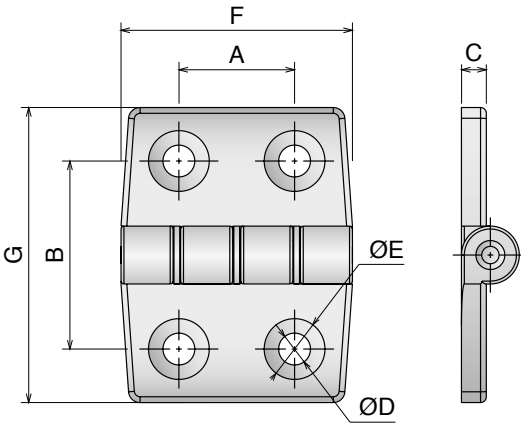

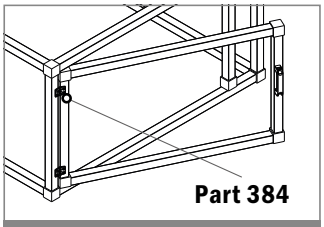

Example of application

386 Maniglia
Handle / Handgriff

Delivery: Easy Standard

Part	Article-Nr.	A	B	C	Ød	ØD	E	F
386	38603	120	140	40	7	11	24	15
386	38601	120	140	40	8,5	13	24,5	16
386	38602	160	185	48	8,5	15	29	16

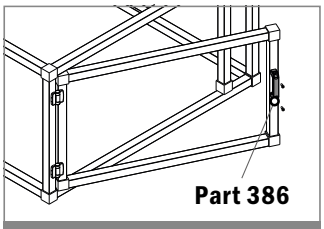

Example of application

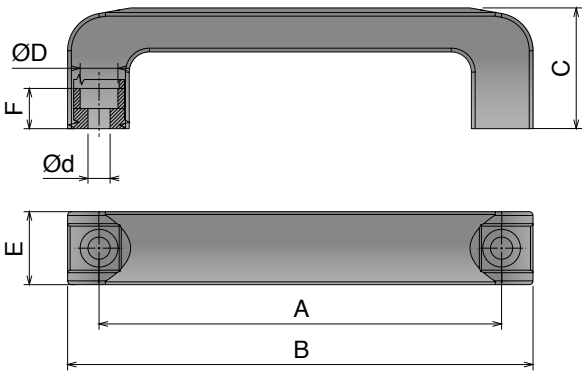

Materiale / *Material / Materialien:*
Part. 3003: Maniglia: Poliammide/*Handle: Polyamide/Griff: Polyamid*
Inserto femmina: Ottone/*Female insert: Brass/Einsatz: Messing*
Part. 397: Acciaio inox /*Stainless steel /Edelstahl*

3003 Maniglia piena con boccola
Solid handle with threaded insert / Handgriff mit Innengewinde

Delivery: Easy Standard

Part	Article-Nr.	A	B	C	ØD	E	F	G	H
3003	300301	120	134	34	M6	9	50	16	25
3003	300302	120	134	34	M8	14	50	16	25

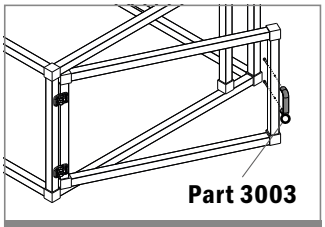

Example of application

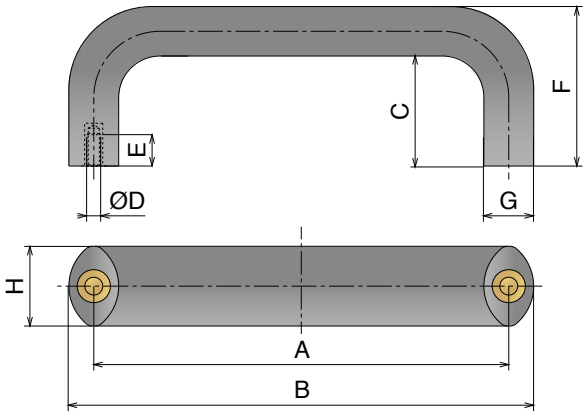

397 Maniglia acciaio inox
Stainless Steel handle / Handgriffe Edelstahl

Stainless Steel | AISI 304

Delivery: Easy Standard

Part	Article-Nr.	A
397	39701	95
397	39702	100
397	39703	110

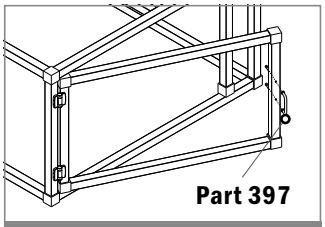

Example of application

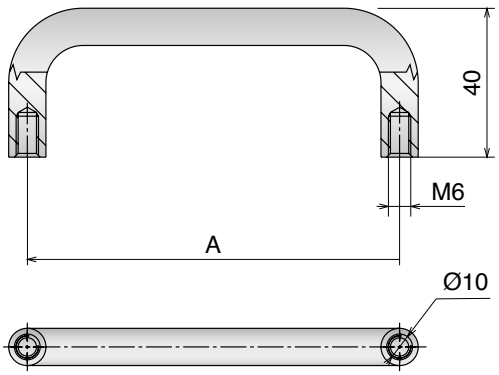

Oadby Core product range
Oadby Available from stock in Leicester
Easy Available from stock in Italy
Standard Produced to order in Italy

Movex®

Materiale / *Material / Materialien:*
Maniglia: Poliammide/*Handle: Polyamide/Griff: Polyamid*
Inserto femmina: Ottone nichelato/*Female insert: Nichel plated brass /Einsatz: Messing vernickelt*
Inserto maschio: Acciaio inox /*Male insert: Stainless steel /Aussengewinde: Edelstahl*

374 Maniglia a ripresa
Adjustable handle / Ratschenhebel

NEW DESIGN

Delivery: Easy Standard

	Part	Article-Nr.	A	B	C	D	E
	374	37403	51	33	9	M5	12
	374	37404	51	33	9	M6	12
	374	37405	63	41	12	M6	18
	374	37406	63	41	12	M8	18
	374	37407	63	41	12	M10	18
Oadby	374	37401	76.5	43	13	M8	18
	374	37409	76.5	43	13	M10	18
	374	37402	93.5	54	15.5	M10	22
	374	37408	93.5	54	15.5	M12	22

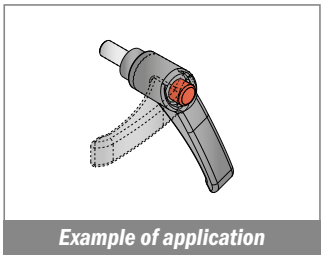

Example of application

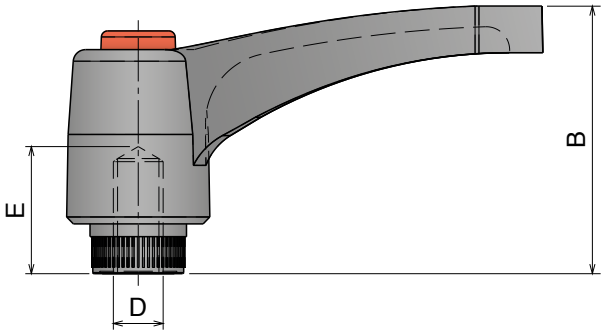

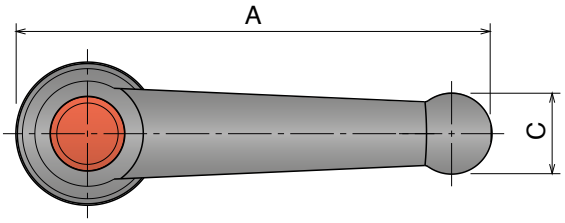

375 Maniglia a ripresa
Adjustable handle / Ratschenhebel

Delivery: Easy Standard

	Part	Article-Nr.	A	B	C	D	E
	375	37508	51.5	33	9	M5	15
	375	37509	51.5	33	9	M6	15
	375	37510	63	41	12	M8	15
	375	37511	63	41	12	M8	20
	375	37515	63	41	12	M8	55
Oadby	375	37501	76.5	43	13	M8	20
	375	37512	76.5	43	13	M8	25
Oadby	375	37502	76.5	43	13	M10	25
	375	37513	93.5	54	15.5	M10	20
	375	37514	93.5	54	15.5	M10	25

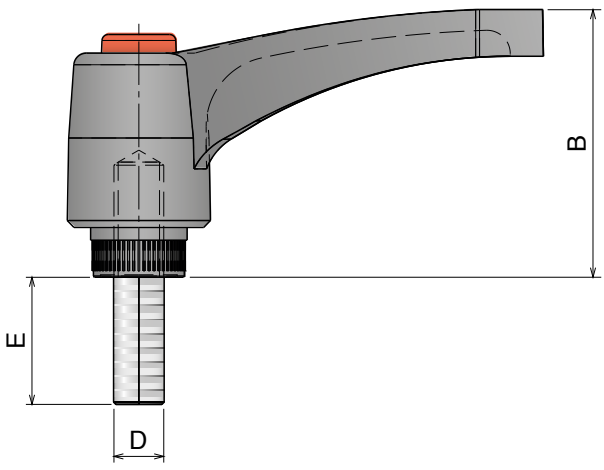

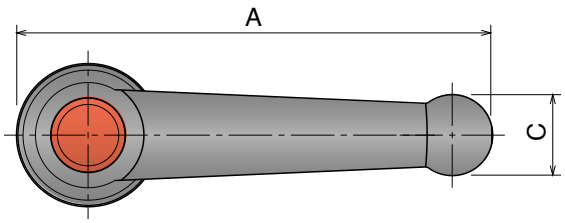

Materiale / *Material* / *Materialien:*
Morsetto: Poliammide/*Clamp: Polyamide/Klemme: Polyamid*
Viti e dadi: Acciaio inox /*Screws and nuts: Stainless steel /Schraube und Mutter: Edelstahl*

377 Morsetto standard per fotocellula o riflettore
Clamp for photocells or reflector / Klemme für Fotozelle oder Reflektor

Delivery: Easy Standard

Part	Article-Nr.	ØA
377	37701	14
377	37702	16
377	37703	20

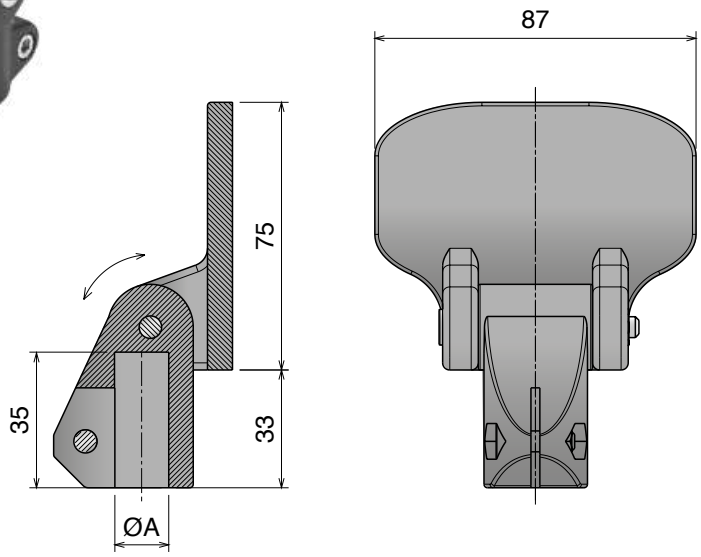

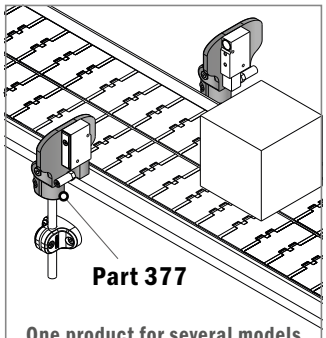

One product for several models of photocells reflectors:

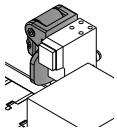
Omron E3A2

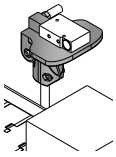
Leuze/RK18

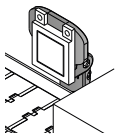
Sicest/RF-230

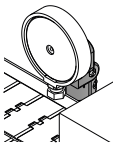
Diell/RL110

and many other types:
Sick/WL36 - Datalogic/RT7
Omron/E35-R - Datalogic/R2

Example of application

378 Morsetto a "T"
T-clamp / T-Klemme

Delivery: Easy Standard

Part	Article-Nr.	A	B
378	37801	10	8
378	37802	12	10
378	37803	14	12

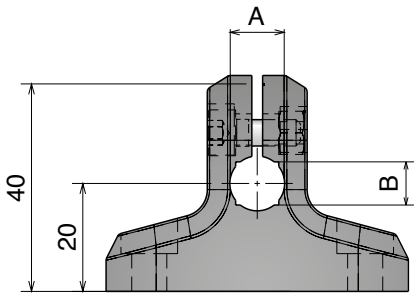

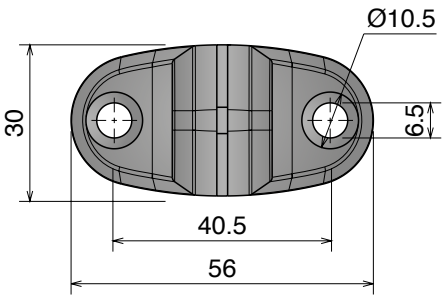

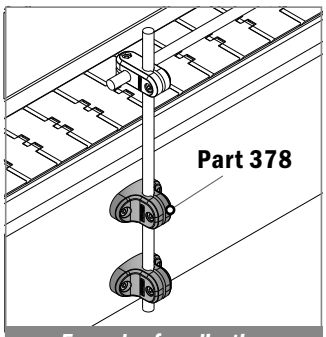

Example of application

Oadby Core product range
Oadby Available from stock in Leicester
Easy Available from stock in Italy
Standard Produced to order in Italy

Movex

379 Morsetto per riflettore
Clamp for reflector / Reflektorklemme

Delivery: Easy Standard

Part	Article-Nr.	A	B
379	37901	10	8
379	37902	12	10
379	37903	14	12

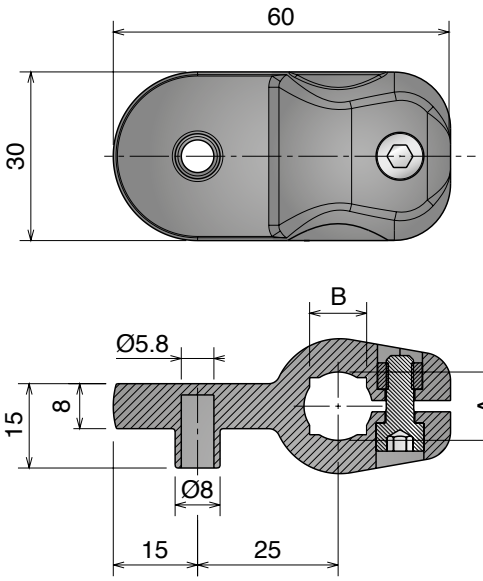

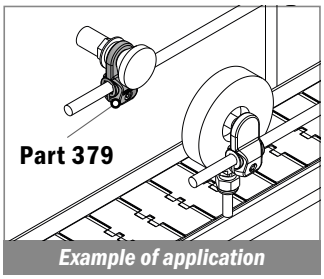

Example of application

380 Morsetto per fotocellule o sensori
Clamp for photocells or sensors / Klemme für Lichtschranke oder Sensoren

Delivery: Easy Standard

Part	Article-Nr.	A	B
380	38001	10	8
380	38002	12	10
380	38003	14	12

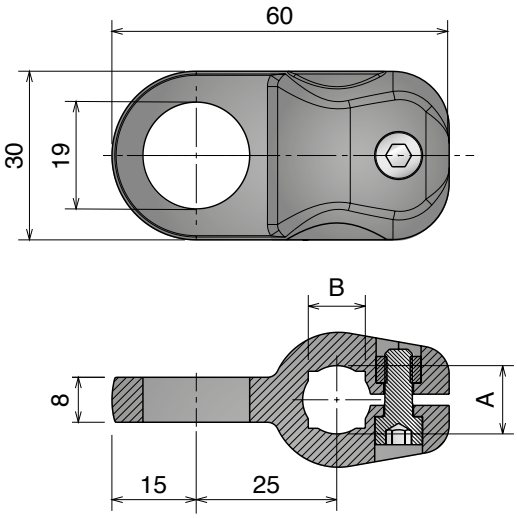

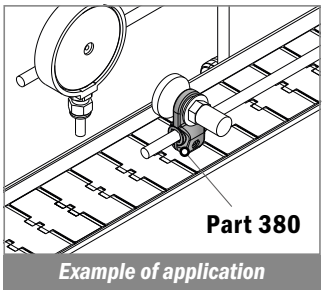

Example of application

Materiale / *Material / Materialien:*
Morsetto: Poliammide/*Clamp: Polyamide/Klemme: Polyamid*
Viti e dadi: Acciaio inox /*Screws and nuts: Stainless steel /Schraube und Mutter: Edelstahl*

381 Morsetto a croce
Cross clamp / Kreuzklemmee

NOW ALSO IN HYGIENIC BLUE

Delivery: Easy Standard

Part	Article-Nr.	ØA	⍁B	ØC	⍁D	Colour
381	38101	14	12	14	12	Black
381	38102	16	14	16	14	Black
381	38103	18	-	18	-	Black
381	38104	20	16	20	16	Black
381	38111	14	12	14	12	Hygienic blue
381	38112	16	14	16	14	Hygienic blue
381	38113	18	-	18	-	Hygienic blue
381	38114	20	16	20	16	Hygienic blue
381	38121	16	-	16	-	Stainless steel
381	38122	16	-	20	-	Stainless steel
381	38123	20	-	20	-	Stainless steel

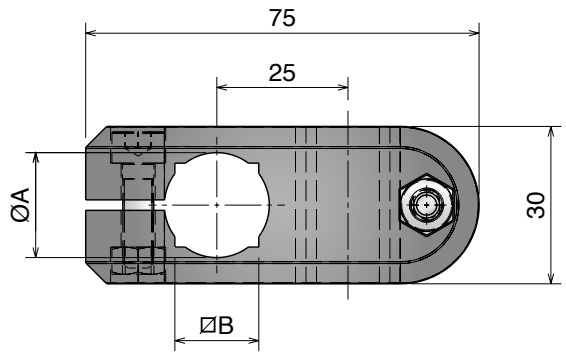

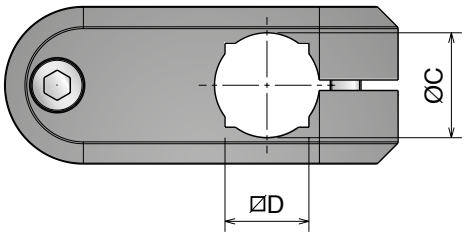

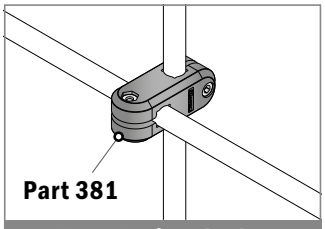

Example of application

382 Morsetto a croce
Cross clamp / Kreuzklemmee

NOW ALSO IN HYGIENIC BLUE

Delivery: Easy Standard

Part	Article-Nr.	ØA	⍁B	C	D	Colour
382	38201	10	8	10	8	Black
382	38202	12	10	12	10	Black
382	38203	14	12	14	12	Black
382	38211	10	8	10	8	Hygienic blue
382	38212	12	10	12	10	Hygienic blue
382	38213	14	12	14	12	Hygienic blue

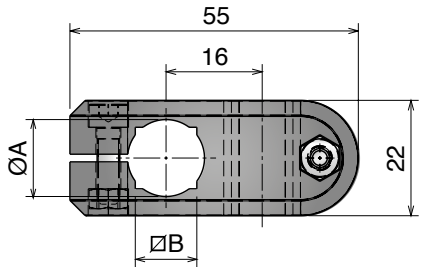

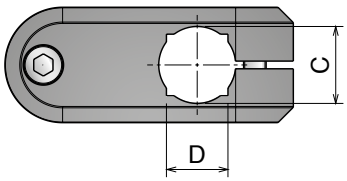

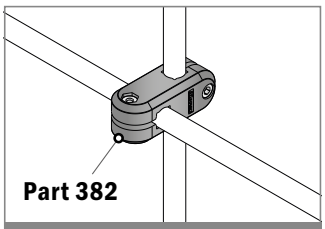

Example of application

Oadby Core product range
Oadby Available from stock in Leicester
Easy Available from stock in Italy
Standard Produced to order in Italy

Movex®

376 Morsetto a croce "extra"
Extra Cross Block / Kreuzklemme "Extra"

NEW DESIGN

Delivery: Easy Standard

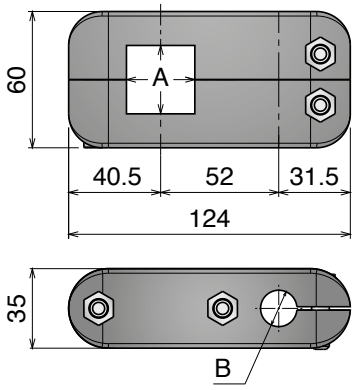

Part	Article-Nr.	A	B
376	37601	30x30	16
376	37604	30x30	20
376	37602	40x40	16
376	37603	40x40	20

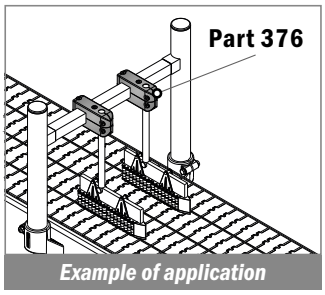

Morsetto a croce "extra" con maniglia
Extra Cross Block with handle / Kreuzklemme "Extra" m. Ratschenhebel

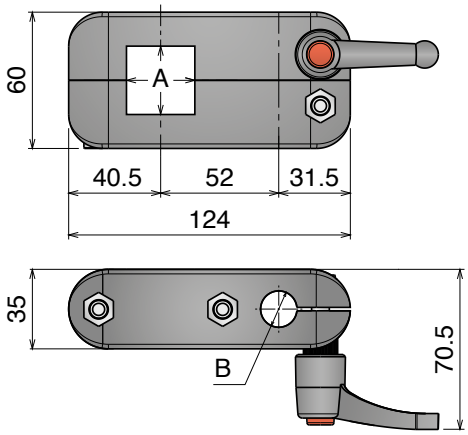

Part	Article-Nr.	A	B
376	37611	30x30	16
376	37614	30x30	20
376	37612	40x40	16
376	37613	40x40	20

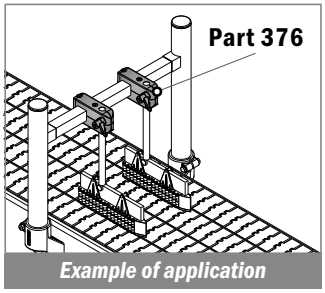

Morsetto a croce "extra" con maniglie
Extra Cross Block with handles / Kreuzklemme "Extra" m. Ratschenhebel

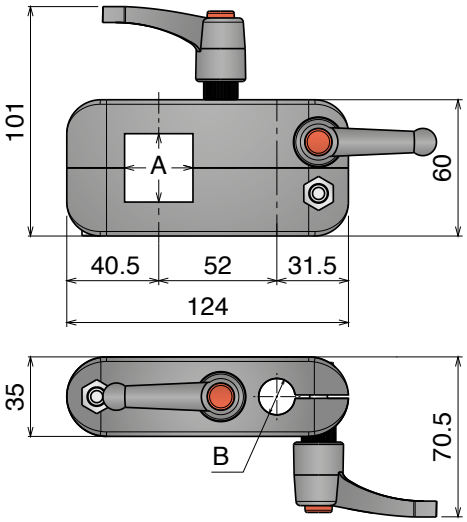

Part	Article-Nr.	A	B
376	37621	30x30	16
376	37624	30x30	20
376	37622	40x40	16
376	37623	40x40	20

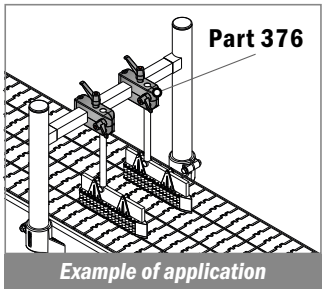

Materiale / *Material* / *Materialien:* Corpo: PA/*Body: PA/Korpus: PA*
Volantino: PA+ ottone nichelato/*Knob: PA+ nickel plated bross/Stengriff: PA+ messing vernickelt*
Tirante e rondella: Acciaio inox/*Eyebolt and washer: Stainless steel/ Augenschraube und Unterlegs: Edelstahl*

391 Morsetto a croce
Cross clamp / Kreuzklemme

Delivery: Easy Standard

Part	Article-Nr.	ØA	ØB
391	39101	12	12
391	39103	14	14
391	39102	16	16
391	39104	12	16

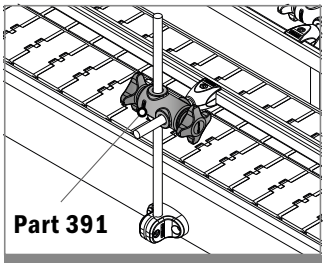

Example of application

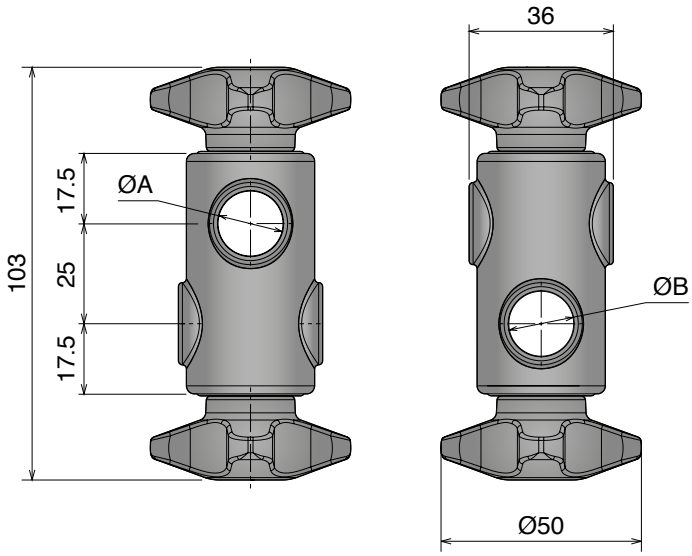

NEW 1097 Profilo di chiusura
Closing profile / Abdeckprofil

Delivery: Easy Standard

Article-Nr.	Material	Availability	Supply
109701-30	Grey PVC	Stock item	30 m coils

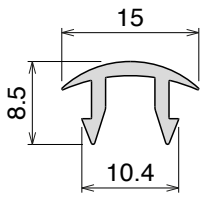

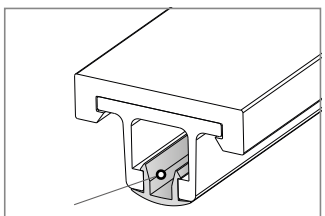

Example of application

Used with Part:
154 - 155 - 159 - 164 - 165 - 188
358 - 359 - 360 - 361 - 1055 - 1088 - 1089

Oadby Core product range
Oadby Available from stock in Leicester
Easy Available from stock in Italy
Standard Produced to order in Italy
Movex

387 Sostegno per Sgocciolatoio
Drip Tray Supports / Tropfblechhalter

Delivery: Easy | Standard — Max load capacity 20 Kg

Part	Article-Nr.	L	Type
387	38701	180	A
387	38702	250	A
387	38703	180	B
387	38704	250	B
387	38705	280	B
387	38706	246	C
Oadby 387	38707	396	C
387	38708	180	D
387	38709	250	D

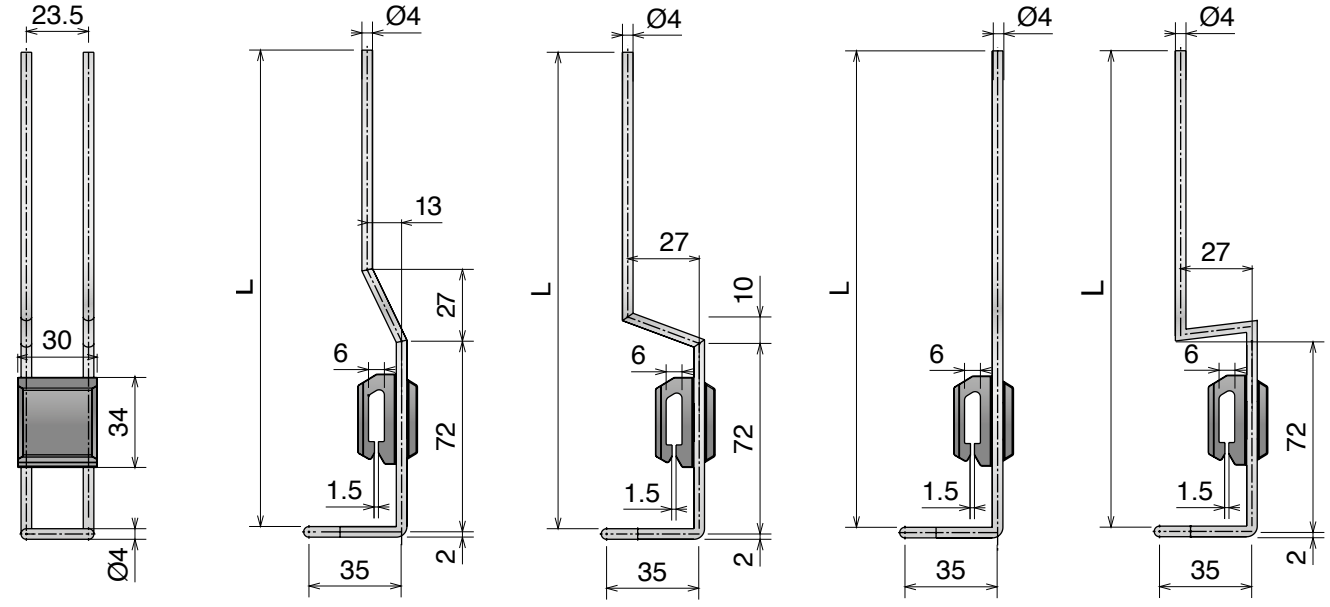

TYPE **A** TYPE **B** TYPE **C** TYPE **D**

388 Rondella di fissaggio
Fixing washer / Fixierscheibe

Delivery: Easy | Standard

Part	Article-Nr.	Type
Oadby 388	38801	A
388	38802	B

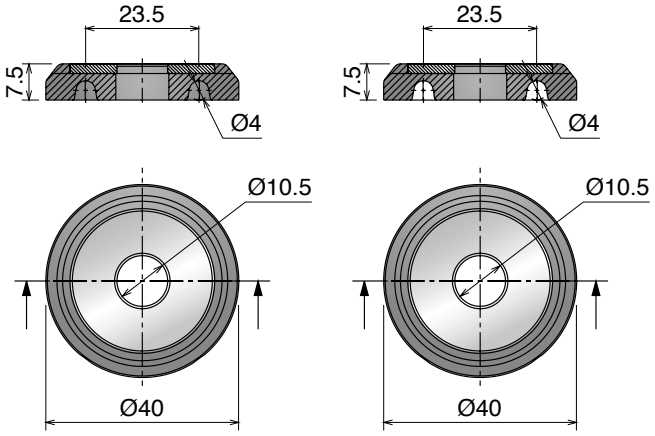

TYPE **A** TYPE **B**

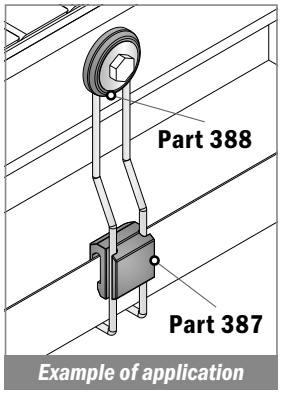

Example of application

NEW

903

Vite igienica cerficata ed igienica
Certified hygienic screw / Zertifiziert hygienische Schraube

Delivery: Easy Standard

Main features:
- Stainless steel AISI 304
- Blue seal for hermetic closure

Art-Nr.	Sp	D	TH	L		Box
903255	M8	16	58	45	13	10 pcs
903253	M10	20	60	45	16	10 pcs
903251	M12	24,5	78	60	18	10 pcs

CERTIFIED PRODUCTS
ASK FOR CERTIFICATION:
certificate@movexii.com

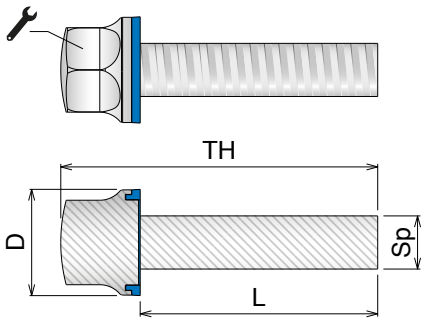

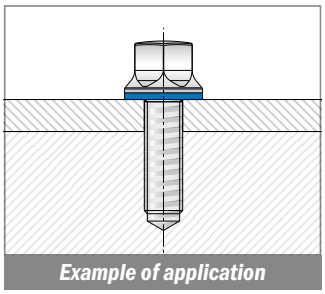
Example of application

NEW

903

Dado cerficato ed igienico
Certified hygienic nut / Zertifiziert hygienische Hutmutter

Delivery: Easy Standard

Main features:
- Stainless steel AISI 304
- Blue seal for hermetic closure

Art-Nr.	Sp	D	TH	L		Box
903235	M6	13	14	10	10	10 pcs
903236	M8	16	17	12	13	10 pcs
903237	M10	20	20,5	15	16	10 pcs
903238	M12	24,5	25	18	18	10 pcs
903239	M16	32	32	23	24	10 pcs
903240	M20	39	38	27	30	10 pcs

CERTIFIED PRODUCTS
ASK FOR CERTIFICATION:
certificate@movexii.com

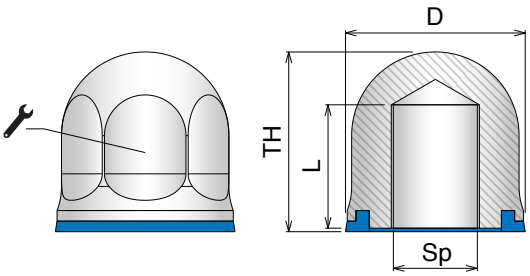

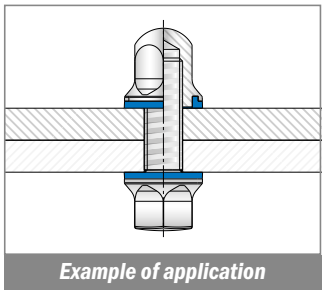
Example of application

998

Dado
Nut / Sechskantmutter

Delivery: Easy Standard

Main features:
- Stainless steel (SS) or Zinc plated steel (FeZn)
- UNI 5588 - ISO 4032 - DIN 934

Art-Nr. SS	Art-Nr. FeZn	Sp	Box
99801	99801Z	M10	50 pcs
99802	99802Z	M12	50 pcs
99804	99804Z	M16	10 pcs
99805	99805Z	M20	10 pcs
99806	99806Z	M24	5 pcs
99807	99807Z	M30	5 pcs
99808	99808Z	M36	5 pcs

Oadby Core product range
Oadby Available from stock in Leicester
Easy Available from stock in Italy
Standard Produced to order in Italy
Movex

513

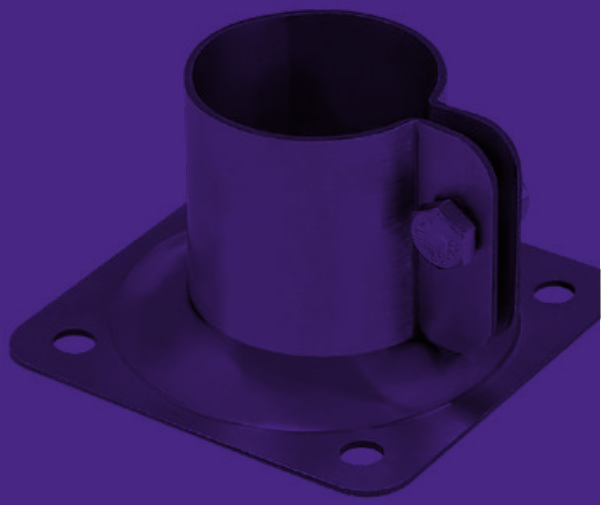

401 Pag 514
402 Pag 514
403 Pag 515
404 Pag 515
407 Pag 516
408 Pag 516
409 Pag 517
499 Pag 517
410 Pag 518
411 Pag 518
426 Pag 519
432 Pag 519
427 Pag 520
343 Pag 520
425 Pag 521
413 Pag 521
433 Pag 522
414 Pag 522
419 Pag 523
420 Pag 523
415 Pag 524
416 Pag 525
428 Pag 526
429 Pag 526
430 Pag 526
418 Pag 527
421 Pag 527
422 Pag 528
423 Pag 528
424 Pag 528

Conveyor support components

Materiale / *Material / Materialien:*
Basi: Poliammide/*Base: Polyamide/Halter: Polyamid*
Viti e rondelle: Acciaio inox/*Screws and washers: Stainless steel/ Schrauben und Scheibe: Edelstahl*
Inserti e dadi: ottone nichelato/Inserts nuts: nickel plated brass /Mutter: Messing vernickelt

401 Base a due braccia
Bipod / Zweibeinhalter

Delivery: **Easy** **Standard** Fasteners included

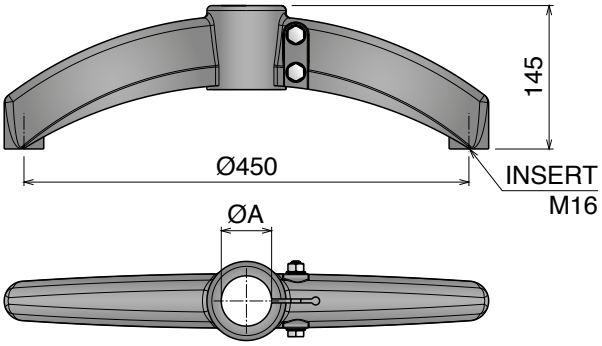

	Part	Article-Nr.	ØA
Oadby	401	40101	48,3
Oadby	401	40105	50,9
	401	40102	60,3

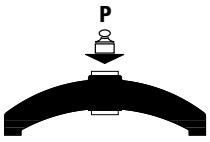

Tube sliding load resistance
P= 8000 N
Max applicable load
P= 9600 N
Bolts tightening torque
25 N.m

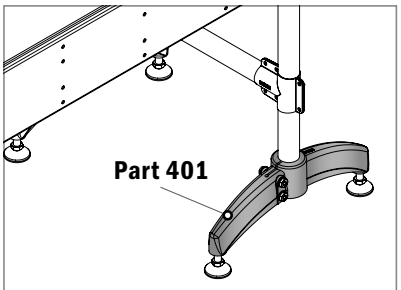

Example of application

402 Base a due braccia 180° con giunto
Bipod 180° with connector / Zweibeinhalter 180° m. Verbinder

Delivery: **Easy** **Standard** Fasteners included

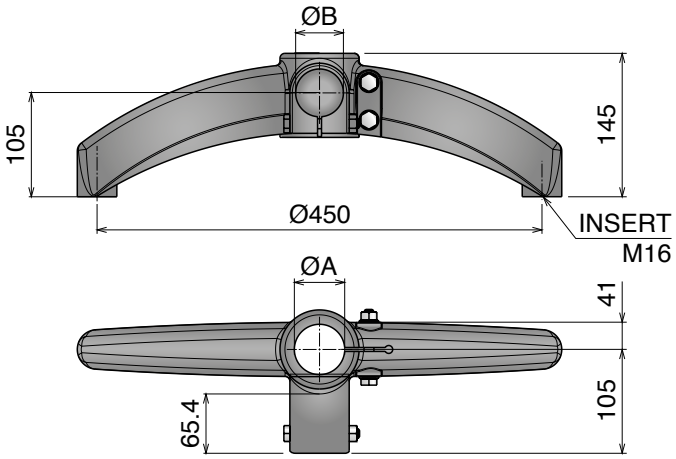

	Part	Article-Nr.	ØA	ØB
Oadby	402	40201	48,3	48,3
	402	40205	50,9	48,3
Oadby	402	40202	60,3	48,3
Oadby	402	40203	48,3	42,4
Oadby	402	40206	50,9	42,4
	402	40204	60,3	42,4

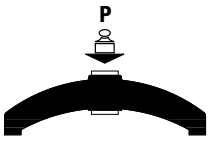

Tube sliding load resistance
P= 8000 N
Max applicable load
P= 8000 N
Bolts tightening torque
25 N.m

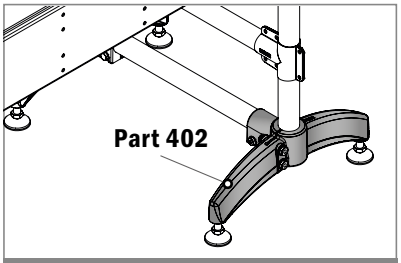

Example of application

Oadby Core product range
Oadby Available from stock in Leicester
Easy Available from stock in Italy
Standard Produced to order in Italy

Movex

Materiale / *Material / Materialien:*
Basi: Poliammide/*Base: Polyamide/Halter: Polyamid*
Viti e rondelle: Acciaio inox/*Screws and washers: Stainless steel/ Schrauben und Scheibe: Edelstahl*
Inserti e dadi: ottone nichelato/Inserts nuts: nickel plated brass /Mutter: Messing vernickelt

403 Base a due braccia 120° con giunto
Bipod 120° with connector / Zweibeinhalter 120° m. Verbinder

Delivery: Easy Standard Fasteners included

Part	Article-Nr.	ØA	ØB
403	40301	48,3	48,3
403	40305	50,9	48,3
403	40302	60,3	48,3
403	40303	48,3	42,4
403	40306	50,9	42,4
403	40304	60,3	42,4

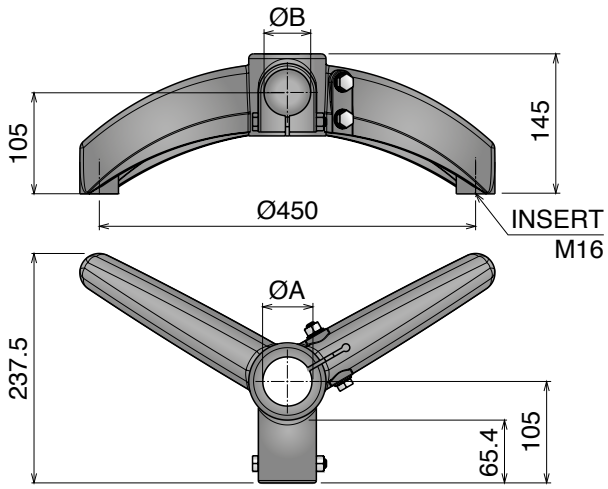

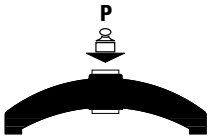

Tube sliding load resistance
P= 8000 N
Max applicable load
P= 8000 N
Bolts tightening torque
25 N.m

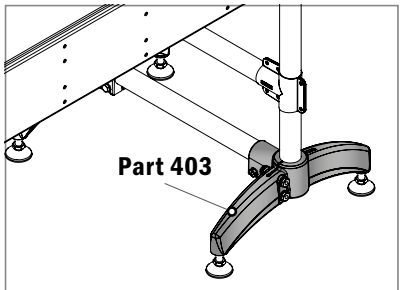

Example of application

404 Base a tre braccia
Tripod / Dreibeinhalter

Delivery: Easy Standard Fasteners included

Part	Article-Nr.	ØA
404	40401	48,3
404	40405	50,9
404	40402	60,3

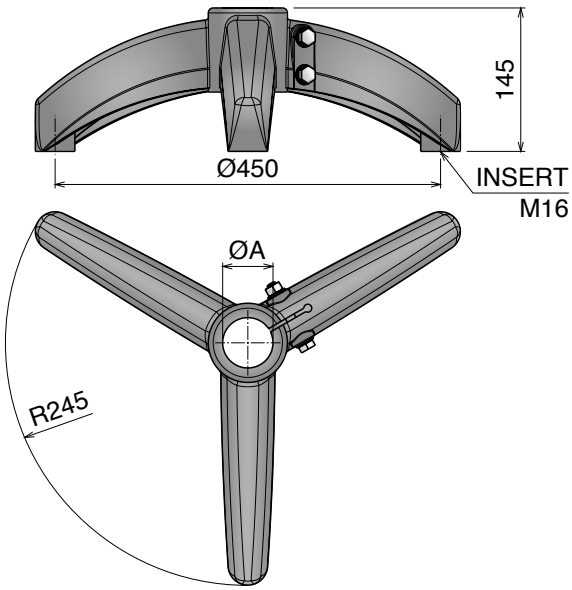

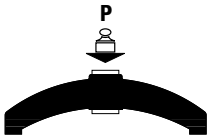

Tube sliding load resistance
P= 8000 N
Max applicable load
P= 10000 N
Bolts tightening torque
25 N.m

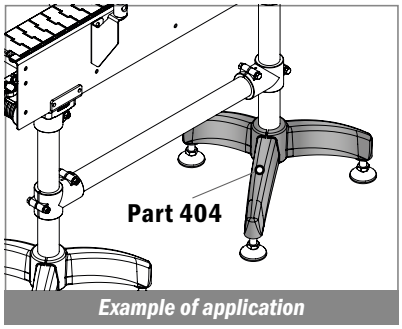

Example of application

Materiale / *Material / Materialien:*
Testata: Poliammide/Side bracket: Polyamide/Halter: Polyamid
Viti e rondelle: Acciaio inox/Screws and washers: Stainless steel/Schrauben und Scheibe: Edelstahl
Dadi: ottone nichelato/Nuts: nickel plated brass/Mutter: Messing vernickelt

407 Testata laterale
Side mounting top bracket / seitlicher Stützkopf

Delivery: Easy | Standard — Max recommended tightening torque 2 kgm

Part	Article-Nr.	ØA
407	40701	48,3
407	40702	50,9

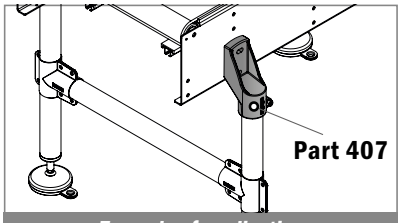

Example of application

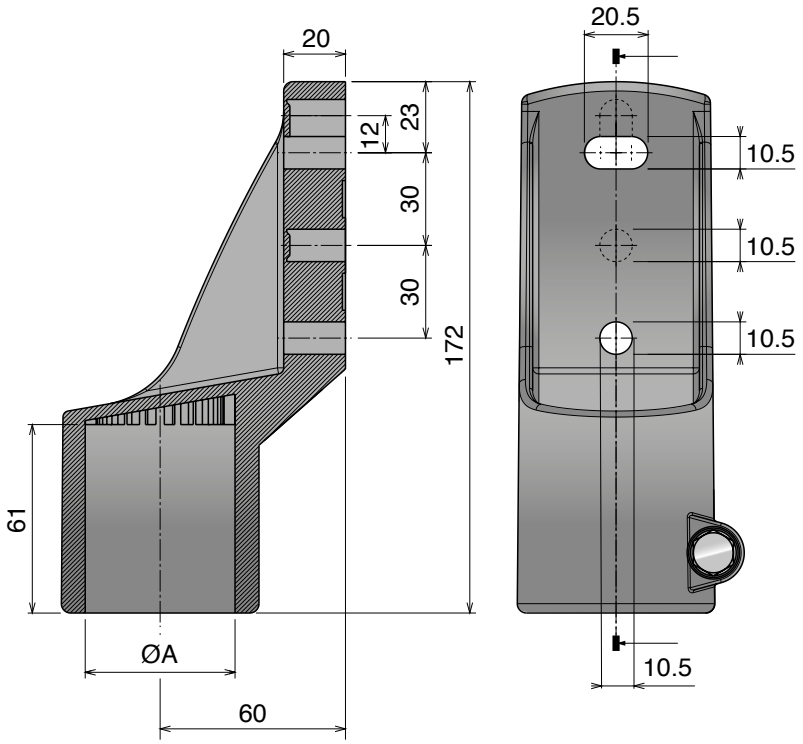

408 Testata laterale
Side mounting top bracket / seitlicher Stützkopf

RANGE EXTENSION

Delivery: Easy | Standard — Max recommended tightening torque 2,5 kg/m | Fasteners not included

Part	Article-Nr.	ØA	B	C
408	40801	48,3	84	72,5
408	40802	50,9	94	83,5
408	40803	60,3	94	83,5

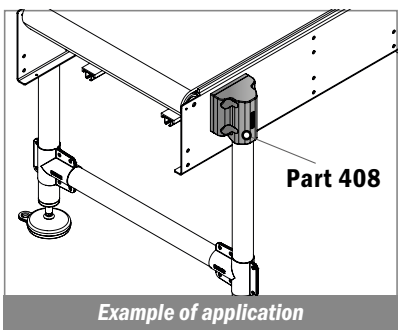

Example of application

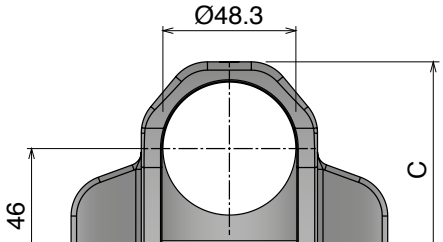

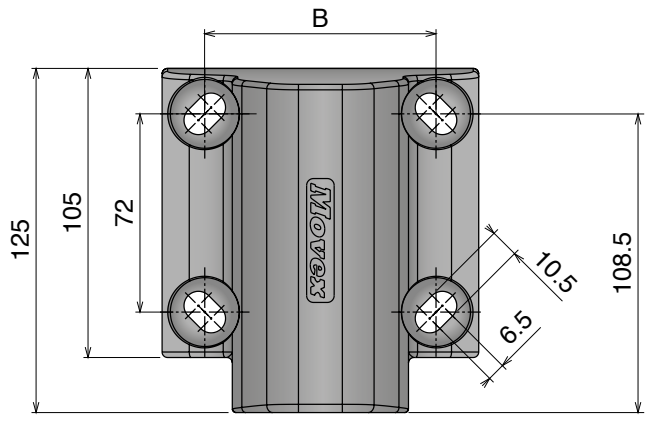

Core product range
Available from stock in Leicester
Easy Available from stock in Italy
Standard Produced to order in Italy

Materiale / *Material / Materialien:*
Testata: Acciaio inox/*Support head: stainless steel/Halter: Edelstahl*
Viti e rondelle: Acciaio inox /Screws and washers: Stainless steel / Mutter: Edelstahl

409 Testata laterale
Side mounting top bracket / seitlicher Stützkopf

Stainless Steel | AISI 304

Delivery: **Easy** **Standard** Fasteners not included

Part	Article-Nr.	ØA
409	40901	48,3

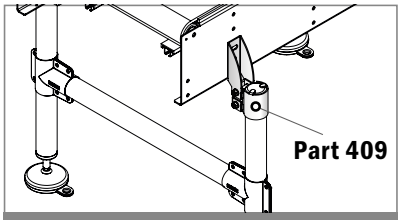

Example of application

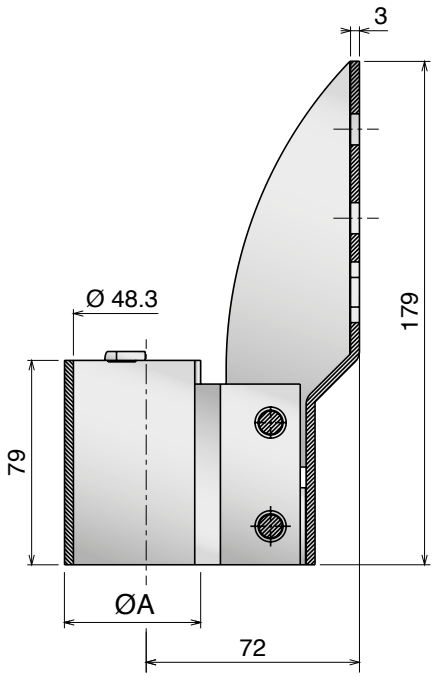

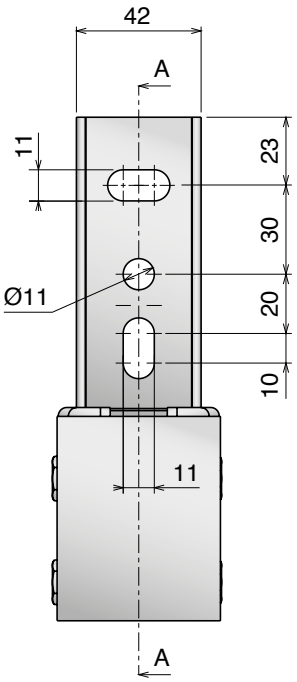

499 Testata laterale
Side mounting top bracket / seitlicher Stützkopf

Stainless Steel | AISI 304

Delivery: **Easy** **Standard** Fasteners not included

Part	Article-Nr.	ØA
499	49995	48,3

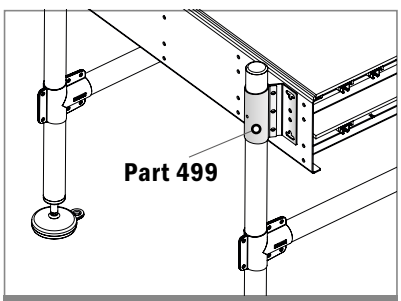

Example of application

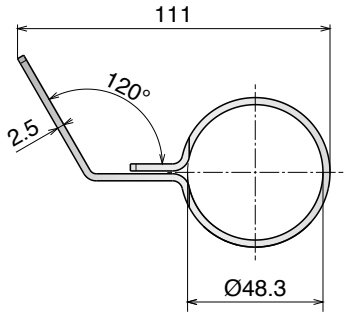

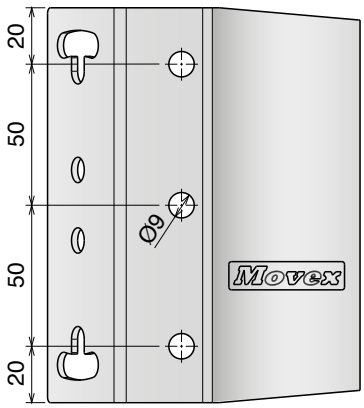

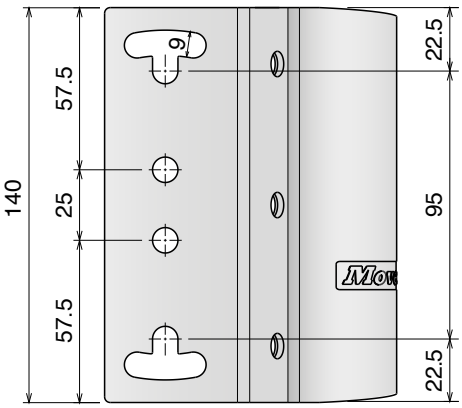

Materiale / *Material / Materialien:*
Testata: Poliammide/Support head: Polyamide/Halter: Polyamid
Viti e rondelle e dado: Acciaio inox /Screws, washers and nut: Stainless steel /Schrauben, Scheibe umd Mutter: Edelstahl

410 Testata d'appoggio
Support head / Stützkopf

Delivery: Easy | Standard — Max recommended tightening torque 3,5 kgm

Part	Article-Nr.	ØA
410	41001	48,3
410	41002	60,3

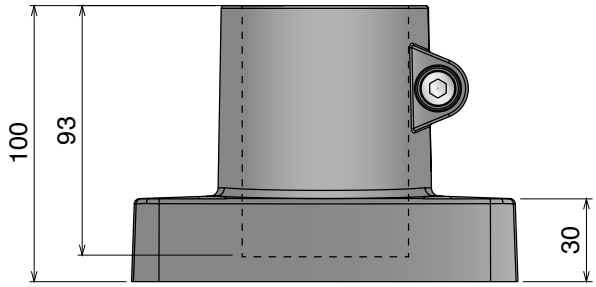

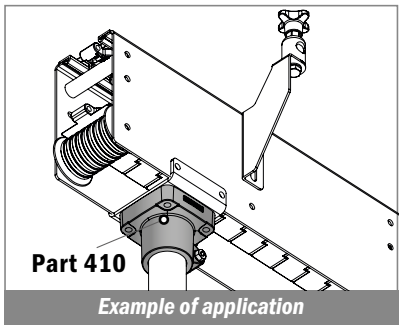

Example of application

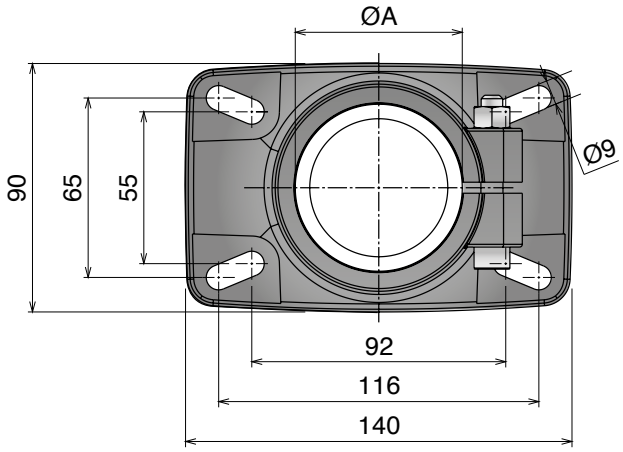

411 Testata d'appoggio
Support head / Stützkopf

Delivery: Easy | Standard — Max recommended tightening torque 1,5 kgm

Part	Article-Nr.	ØA
411	41101	48,3
411	41102	50,9

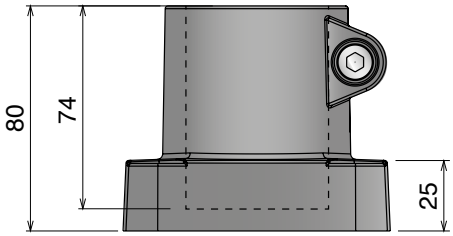

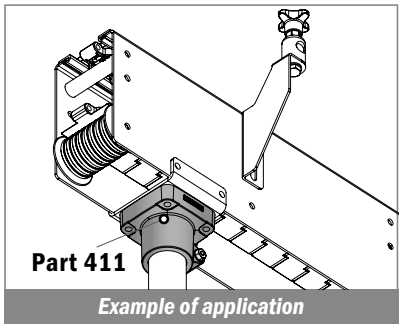

Example of application

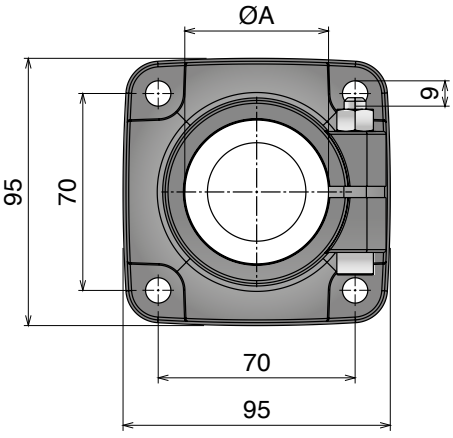

Core product range
Available from stock in Leicester
Easy Available from stock in Italy
Standard Produced to order in Italy

Movex

426 Testata d'appoggio
Support head / Stützkopf

Stainless Steel | AISI 304

Screw included

Part	Article-Nr.
426	42601

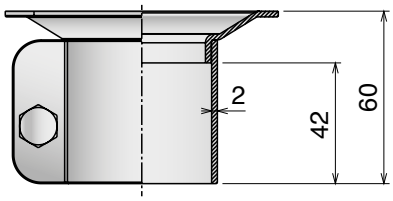

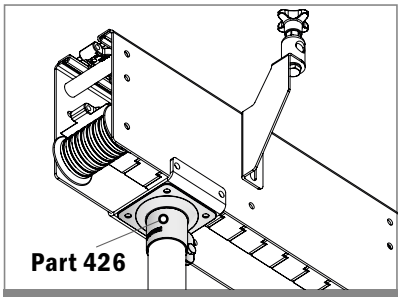

Example of application

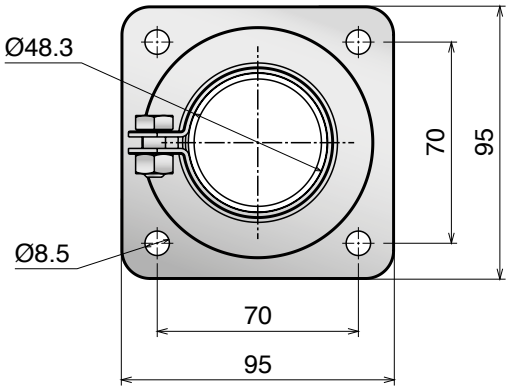

432 Tappo per tubo metrico tondo e quadro
Plug for round and square metric tube / Runde und Quadratische Lamellenstopfen für metrische Rohre

RANGE EXTENSION

Delivery: Easy | Standard

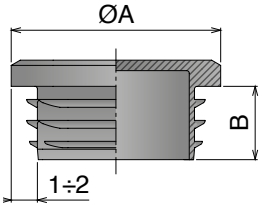

TYPE **A** - Rounded

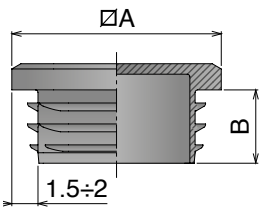

TYPE **B** - Square

Part	Article-Nr.	ØA	B	Type
432	43202	20	11	A
432	43203	25	14	A
432	43204	30	14	A
432	43205	35	14	A
432	43206	40	14	A
432	43201	48	14	A
432	43207	50	17	A

Part	Article-Nr.	⍁A	B	Type
432	43252	20 x 20	11	B
432	43253	25 x 25	14	B
432	43254	30 x 30	14	B
432	43255	35 x 35	14	B
432	43256	40 x 40	14	B
432	43251	50 x 50	14	B
432	43257	60 x 60	14	B

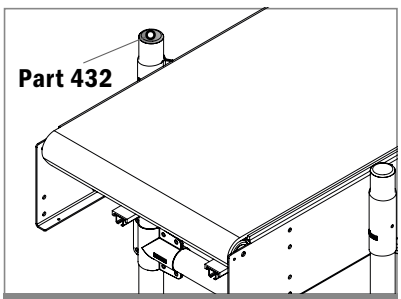

Example of application

Materiale / *Material / Materialien:*
Acciaio inox / *Stainless steel / Edelstahl*

427 Supporto laterale
Side bracket / Seitenhalter

Stainless Steel | AISI 304

Delivery: Easy Standard

Part	Article-Nr.	ØA
427	42701	16
427	42702	20

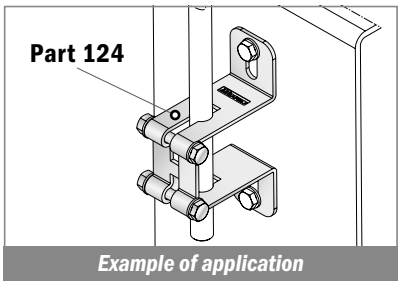

Example of application

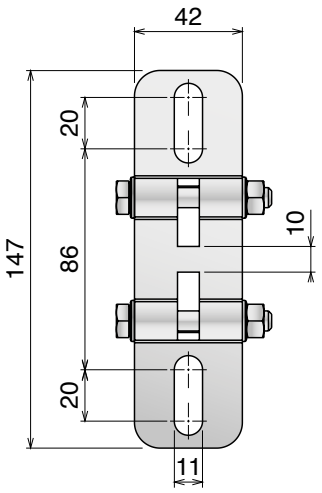

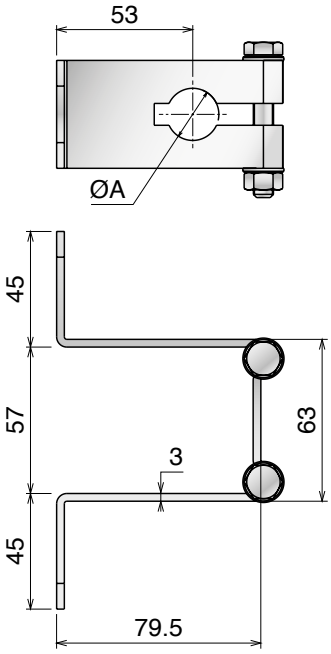

NEW

343 Supporto laterale
Side bracket / Seitenhalter

Stainless Steel | AISI 304

Delivery: Easy Standard

Part	Article-Nr.	Type
343	34301	A
343	34302	B

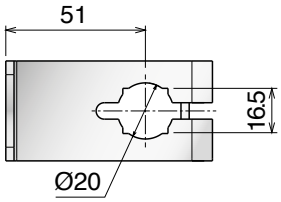

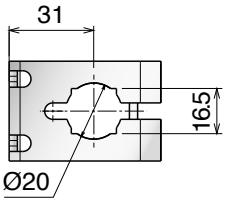

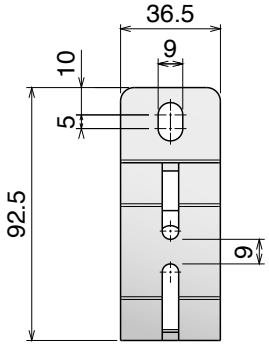

TYPE **A**

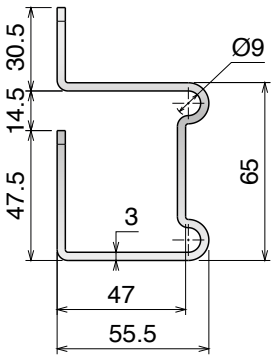

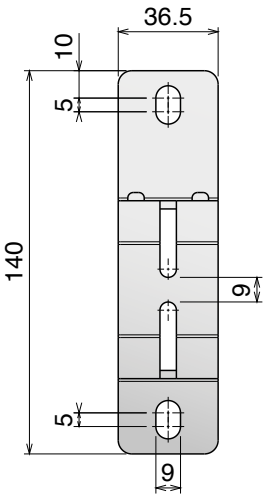

TYPE **B**

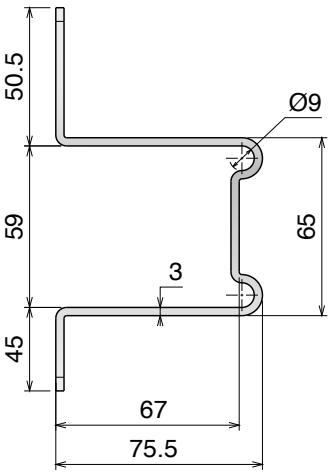

Oadby Core product range
Oadby Available from stock in Leicester
Easy Available from stock in Italy
Standard Produced to order in Italy

Movex®

Materiale / *Material / Materialien:*
Giunto: Poliammide/*Joint: Polyamide/Verbinder: Polyamid*
Viti e rondelle: Acciaio inox/*Screws and washers: Stainless steel/ Schrauben und Scheibe: Edelstahl*
Inserti e dadi: Acciaio inox/*Inserts nuts: Stainless steel/ Mutter: Edelstahl*

425 Morsetto a collare (acciaio inox)
Clamp collar (SS) / Klemmschelle (Edelstahl)

Stainless Steel | AISI 304

Delivery: Easy Standard

Part	Article-Nr.	A	ØB
425	42501	25	48,3
425	42511	25	50,8
425	42521	76,2	50,8

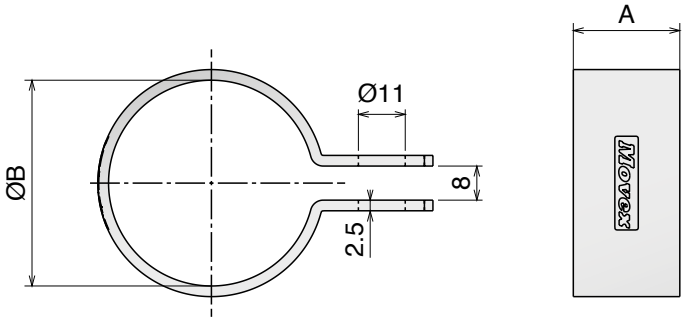

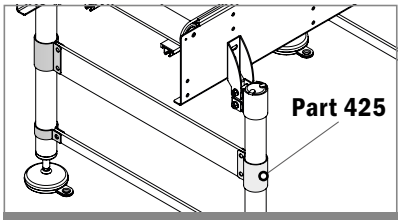

Example of application

413 Giunto di collegamento
Connecting joint / Verbindungselement

RANGE EXTENSION

Delivery: Easy Standard — Max recommended tightening torque 1,5 kgm

Part	Article-Nr.	ØA	ØB	C	D	E
413	41301	48,3	48,3	134	86	68
413	41304	50,9	50,9	134	86	68
413	41302	60,3	48,3	146	98	80
413	41303	60,3	60,3	146	98	80

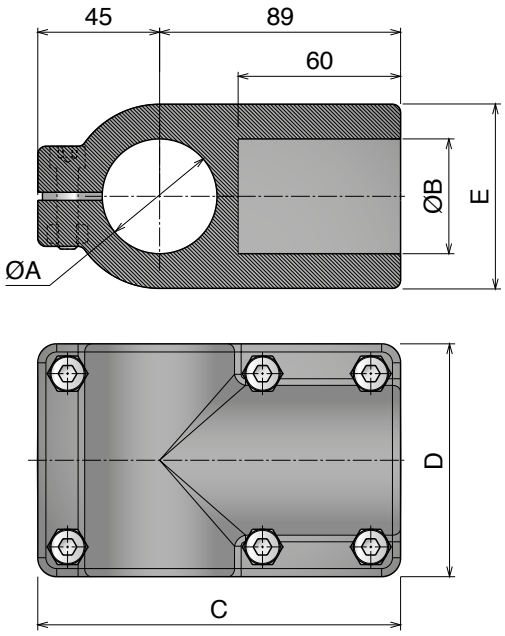

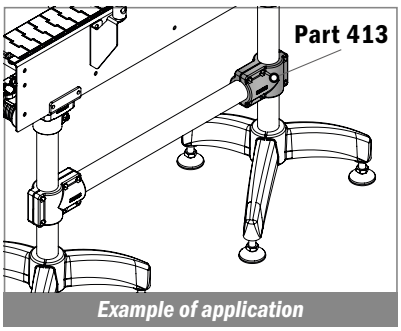

Example of application

Materiale / *Material / Materialien:*
Giunto: Poliammide/*Joint: Polyamide/Verbinder: Polyamid*
Viti e rondelle: Acciaio inox/*Screws and washers: Stainless steel/ Schrauben und Scheibe: Edelstahl*
Inserti e dadi: Acciaio inox/*Inserts nuts: Stainless steel/ Mutter: Edelstahl*

NEW

433 Giunto di collegamento per tubi quadri
Connecting joint for square tubes / Verbindungselement für vierkant Rohre

Delivery: Easy Standard

Part	Article-Nr.	⍁A	⍁B
433	43301	30	30
433	43302	40	40
433	43303	45	45
433	43304	50	50

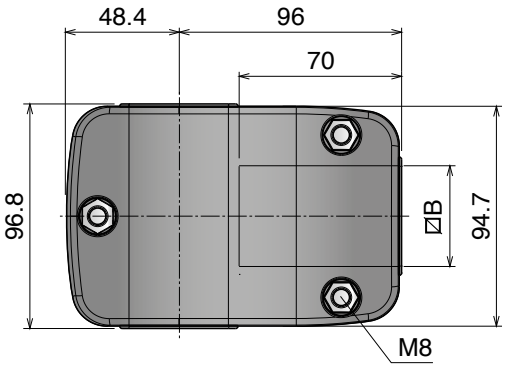

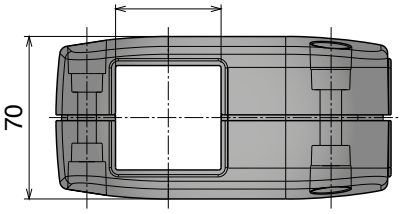

414 Giunto di collegamento (acciaio inox)
Connecting joint (SS) / Verbindungselement (Edelstahl)

Stainless Steel | AISI 304

Delivery: Easy Standard — Max recommended tightening torque 2,5 kgm

Part	Article-Nr.	ØA	ØB	C	D	E
414	41401	48,3	48,3	100	130	72,5
414	41402	60,3	60,3	110	150	92,5

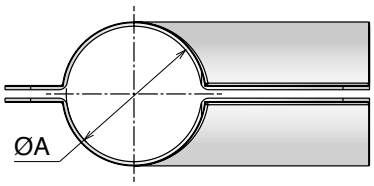

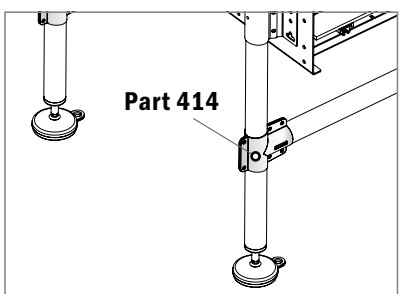

Example of application

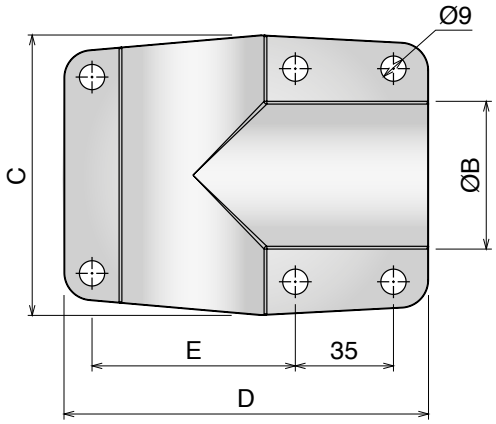

Oadby Core product range
Oadby Available from stock in Leicester
Easy Available from stock in Italy
Standard Produced to order in Italy

Movex

419 Tappi ad espansione
Expansions plugs / Gewindezapfen, Spreizbar

Delivery: Easy Standard

Brass insert
High Strength

Part	Article-Nr. Brass Bush	Article-Nr. PA Bush	ØA	B	C	M
419	41907	-	20	19	3	M8
419	41908	-	20	19	3	M10
419	41901	-	20	20	4	M8
419	41902	-	20	20	4	M10
419	41903	41913	38	40	5	M8
419	41904	41914	38	40	5	M10
419	41905	41915	42,4	40	5	M8
419	41906	41916	42,4	40	5	M10

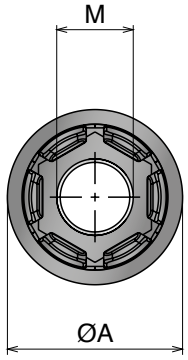

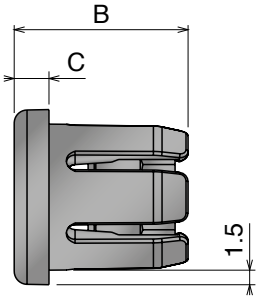

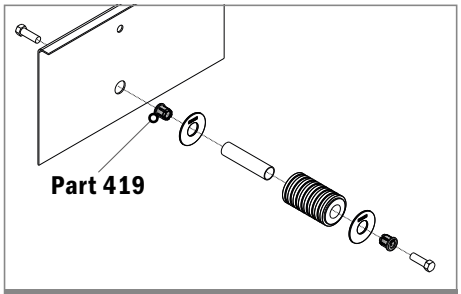

Example of application

420 Tappi ad espansione
Expansions plugs / Gewindezapfen, Spreizbar

Delivery: Easy Standard

Brass insert
High Strength

Part	Article-Nr. Brass Bush	Article-Nr. PA Bush	⍁A	B	C	D	M
420	42001	-	20	20	4	1,5	M8
420	42002	-	20	20	4	1,5	M10
420	42003	-	20	20	4	2	M8
420	42004	-	20	20	4	2	M10
420	42005	42015	40	40	5	2	M8
420	42006	42016	40	40	5	2	M10

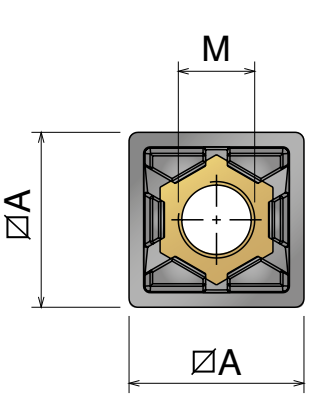

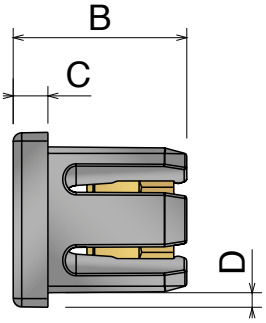

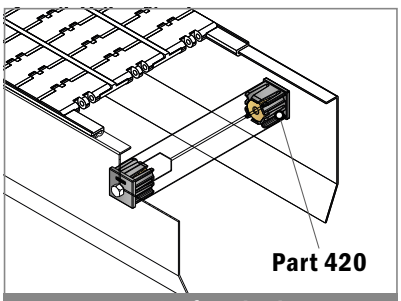

Example of application

Materiale / *Material / Materialien:*
Tappo: Poliammide / *Plug: Polyamide / Stopfen: Polyamid*
Inserti: Ottone nichelato / *Inserts: Nickel plated brass*
Einsatz: Messing vernickelt

415 Tappi tondi filettati
Threaded bushings for round tubes / Gewindezapfen f. Rund-Rohr

RANGE EXTENSION

Delivery: Easy Standard

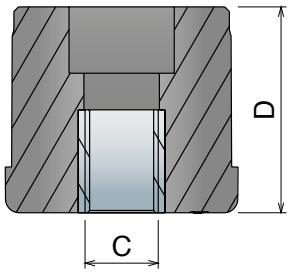

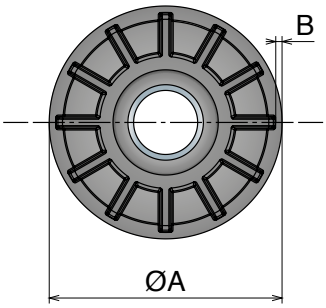

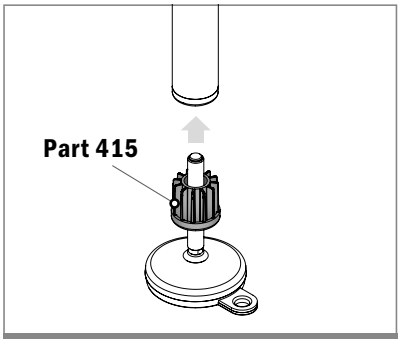

Example of application

Part	Art.-Nr.	ØA	B	C	D
415	415001	20	2	M8	23
415	415002	25	2	M8	26
415	415003			M10	26
415	415004			M12	26
415	41507	30	1	M10	33
415	41508			M12	33
415	41509			M14	33
415	41510			M16	33
415	41511	30	1,5	M10	33
415	41512			M12	33
415	41513			M14	33
415	41514			M16	33
415	41515	30	2	M10	33
415	41516			M12	33
415	41517			M14	33
415	41518			M16	33
415	41519	30	2,5	M10	33
415	41520			M12	33
415	41521			M14	33
415	41522			M16	33
415	41523	38	1,5	M10	40
415	41524			M12	40
415	41525			M14	40
415	41526			M16	40
415	41527	38	2	M10	40
415	41528			M12	40
415	41529			M14	40
415	41530			M16	40
415	41531	38	2,5	M10	40
415	41532			M12	40
415	41533			M14	40
415	41534			M16	40
415	415005	40	3	M8	40
415	415006			M10	40
415	415007			M12	40
415	415008			M14	40
415	415009			M16	40
415	41535	42,4	1,5	M10	43
415	41536			M12	43
415	41537			M14	43
415	41538			M16	43
415	41539			M20	43
415	41540	42,4	2	M10	43
415	41541			M12	43
415	41542			M14	43
415	41543			M16	43
415	41544			M20	43
415	41545	42,4	2,5	M10	43
415	41546			M12	43
415	41547			M14	43
415	41548			M16	43
415	41549			M20	43
415	415010	45	3	M10	48
415	415011			M12	48
415	415012			M14	48
415	415013			M16	48
415	415014			M20	48

Part	Art.-Nr.	ØA	B	C	D
415	41550	48,3	1,5	M10	48
415	41551			M12	48
415	41552			M14	48
415	41501			M16	48
415	41502			M20	48
415	41553	48,3	2	M10	55
415	41554			M12	55
415	41555			M14	55
415	41556			M16	55
415	41557			M20	55
415	41558	48,3	2,5	M10	45
415	41559			M12	45
415	41560			M14	45
415	41561			M16	45
415	41562			M20	45
415	41563	50	1,5	M10	45
415	41564			M12	45
415	41565			M14	45
415	41503			M16	45
415	41504			M20	45
415	415015	50	3	M10	45
415	415016			M12	45
415	415017			M14	45
415	415018			M16	45
415	415019			M20	45
415	41566	50,9	1,5	M10	50
415	41567			M12	50
415	41568			M14	50
415	41569			M16	50
415	41570			M20	50
415	41571	50,9	2	M10	45
415	41572			M12	45
415	41573			M14	45
415	41574			M16	45
415	41575			M20	45
415	41576	50,9	2,5	M10	45
415	41577			M12	45
415	41578			M14	45
415	41579			M16	45
415	41580			M20	45
415	415020	60,3	1,2	M10	55
415	415021			M12	55
415	415022			M14	55
415	415023			M16	55
415	415024			M20	55
415	41581	60,3	1,5	M10	55
415	41582			M12	55
415	41583			M14	55
415	41584			M16	55
415	41585			M20	55
415	41586	60,3	2	M10	55
415	41587			M12	55
415	41588			M14	55
415	41505			M16	55
415	41506			M20	55
415	41589	60,3	2,5	M10	55
415	41590			M12	55
415	41591			M14	55
415	41592			M16	55
415	41593			M20	55

Core product range
Available from stock in Leicester
Easy Available from stock in Italy
Standard Produced to order in Italy

Movex

416 Tappi quadri filettati
Threaded bushings for square tubes / Gewindezapfen f. Vierkant-Rohr

RANGE EXTENSION

Delivery: Easy Standard

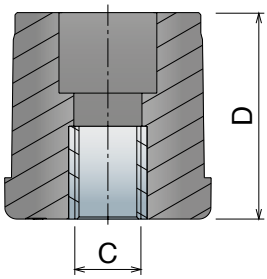

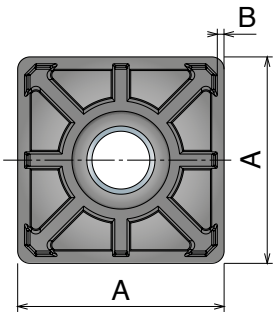

Part	Article-Nr.	A	B	C	D
416	416001	20	1,5	M8	26
416	416002	20	2	M8	26
416	41601	25	1,5	M10	26
Oadby 416	41602			M12	26
Oadby 416	41611	30	1,5	M10	33
Oadby 416	41603			M12	33
416	41612			M14	33
Oadby 416	41604			M16	33
416	41613	30	2	M10	33
416	41614			M12	33
416	41615			M14	33
416	41616			M16	33
416	41617	35	1,5	M10	38
416	41618			M12	38
416	41619			M14	38
416	41620			M16	38
416	41621			M20	38
416	41622	35	2	M10	43
416	41623			M12	43
416	41624			M14	43
416	41625			M16	43
416	41626			M20	43
416	41681	38,1	1,6	M10	43
416	41682			M12	43
416	41683			M14	43
416	41684			M16	43
416	41685			M20	43
416	41686	38,1	3	M10	43
416	41687			M12	43
416	41688			M14	43
416	41689			M16	43
416	41690			M20	43
416	41627	40	1,2	M10	38
416	41628			M12	38
416	41629			M14	38
416	41630			M16	38
416	41631			M20	38
Oadby 416	41632	40	1,5	M10	43
Oadby 416	41605			M12	43
416	41633			M14	43
Oadby 416	41606			M16	43
Oadby 416	41634			M20	43
416	41635	40	2	M10	43
Oadby 416	41636			M12	43
416	41637			M14	45
Oadby 416	41607			M16	45
Oadby 416	41608			M20	45
416	41638	40	2,5	M10	38
416	41639			M12	38
416	41640			M14	38
416	41641			M16	38
416	41642			M20	38
416	41643	45	2	M10	38
416	41644			M12	38
416	41645			M14	38
416	41646			M16	38
416	41647			M20	38

Part	Article-Nr.	A	B	C	D
416	416003	45	3	M10	38
416	416004			M12	38
416	416005			M14	38
416	416006			M16	38
416	416007			M20	38
416	41648	50	1,2	M10	50
416	41649			M12	50
416	41650			M14	50
416	41651			M16	50
416	41652			M20	50
416	41653	50	1,5	M10	50
416	41654			M12	50
416	41655			M14	50
Oadby 416	41656			M16	50
Oadby 416	41657			M20	50
416	41658	50	2	M10	50
416	41659			M12	50
416	41660			M14	50
Oadby 416	41609			M16	50
Oadby 416	41610			M20	50
416	41661	50	2,5	M10	50
416	41662			M12	50
416	41663			M14	50
Oadby 416	41664			M16	50
Oadby 416	41665			M20	50
416	41666	50	3	M10	50
416	41667			M12	50
416	41668			M14	50
Oadby 416	41669			M16	50
Oadby 416	41670			M20	50
416	41671	60	2	M10	55
416	41672			M12	55
416	41673			M14	55
416	41674			M16	55
416	41675			M20	55
416	41676	60	3	M10	55
416	41677			M12	55
416	41678			M14	55
416	41679			M16	55
416	41680			M20	55
416	416008	80	3	M14	55
416	416009			M16	55
416	416010			M20	55

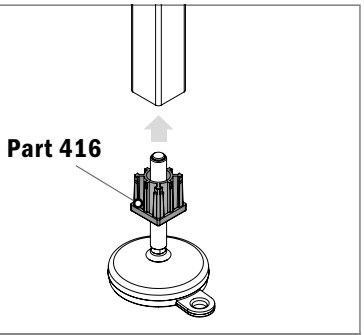

Example of application

Materiale / *Material / Materialien:*
Tappi: Acciaio Inox / *Plug: SS / Stopfen: Edelstahl*

428 Tappi quadri filettati
Threaded bushings for square tube / Gewindezapfen f. Vierkant-Rohr

Stainless Steel | AISI 304

Delivery: Easy Standard

Part	Article-Nr.	⍁A	C	ØB	E
428	42801	40	M16	20	10
428	42802	40	M20	23	11,5
428	42803	45	M16	20	10
428	42804	45	M20	23	11,5
428	42805	50	M16	20	10
428	42806	50	M20	23	11,5
428	42807	60	M16	20	10
428	42808	60	M20	23	11,5

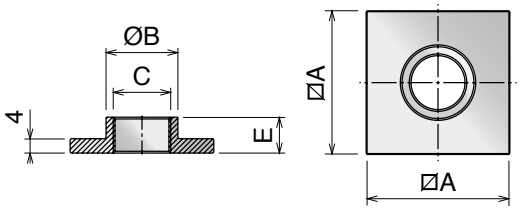

429 Tappi tondi filettati
Threaded bushings for round tube / Gewindezapfen f. Rund-Rohr

Stainless Steel | AISI 304

Delivery: Easy Standard

Part	Article-Nr.	C	ØB	E
429	42901	M16	20	10
429	42902	M20	23	11,5

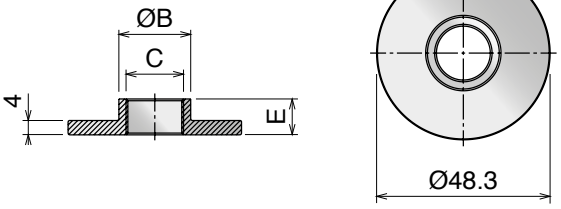

430 Tappi rettangolari filettati
Threaded bushings for rectangular tube / Gewindezapfen f. Rechteck

Stainless Steel | AISI 304

Delivery: Easy Standard

Part	Article-Nr.	C	ØB	E
430	43001	M16	20	10
430	43002	M20	23	11,5

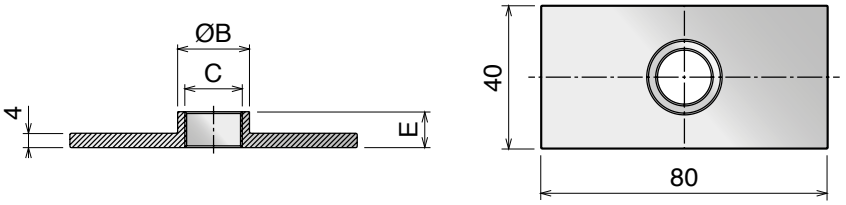

Core product range
Available from stock in Leicester
Easy Available from stock in Italy
Standard Produced to order in Italy

Movex®

418 Giunto di collegamento
Connecting joint / Verbindungselement

Delivery: Easy Standard — For tubes 25 x 25 x 1.5 mm

TYPE A

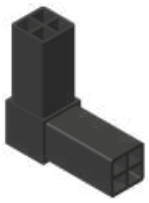

Part	Article-Nr.	Type
418	41801	A

TYPE B

Part	Article-Nr.	Type
418	41802	B

TYPE C

Part	Article-Nr.	Type
418	41803	C

TYPE D

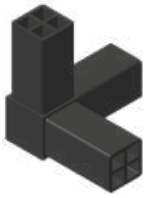

Part	Article-Nr.	Type
418	41804	D

TYPE E

Part	Article-Nr.	Type
418	41805	E

TYPE F

Part	Article-Nr.	Type
418	41806	F

TYPE G

Part	Article-Nr.	Type
418	41807	G

TYPE H

Part	Article-Nr.	Type
418	41808	H

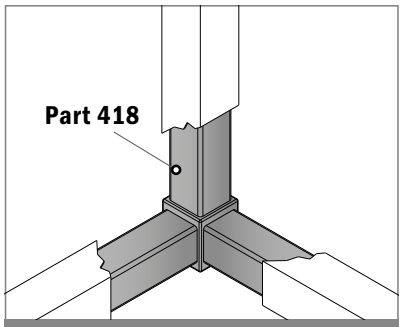

Example of application

421 Blocco per pannelli
Panel clamp / Panelklemme

Delivery: Easy Standard

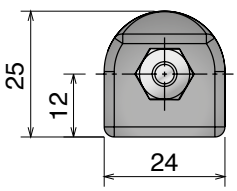

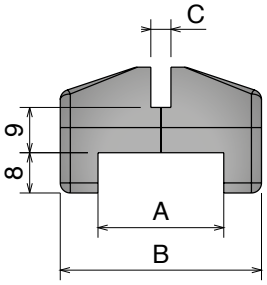

Part	Article-Nr.	A	B	C
421	42101	25	40	4
421	42102	25	40	5
421	42103	25	40	6
421	42104	30	45	4
421	42105	30	45	5
421	42106	30	45	6

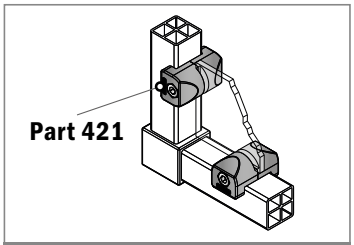

Example of application

Materiale / *Material / Materialien:*
Poliammide / *Polyamide / Polyamid*

422 Fermaporta
Door stop / Türstopper

Delivery: Easy Standard

Part	Article-Nr.	A	B
422	42201	25	31

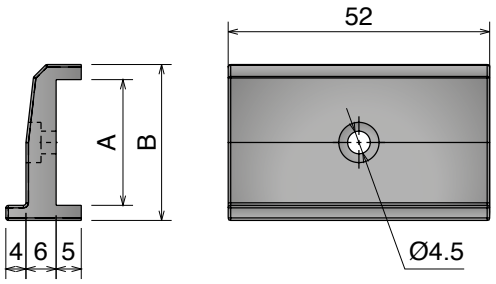

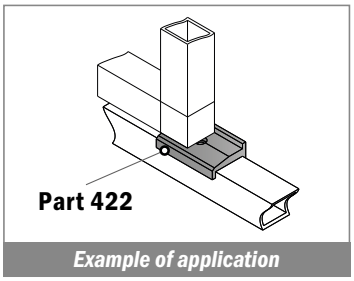

Example of application

423 Blocchetto di fissaggio
Fixing lock / Anschlag

Delivery: Easy Standard

Part	Article-Nr.
423	42301

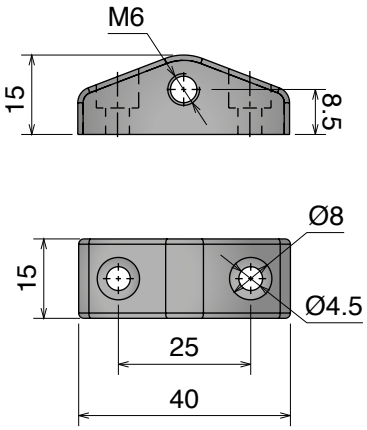

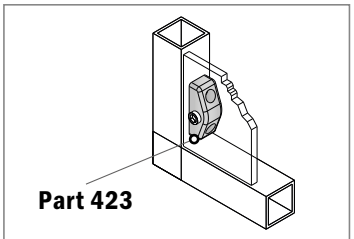

Example of application

424 Fermaporta a molla
Spring loaded latch / Türverschluss

Delivery: Easy Standard

Part	Article-Nr.
424	42401

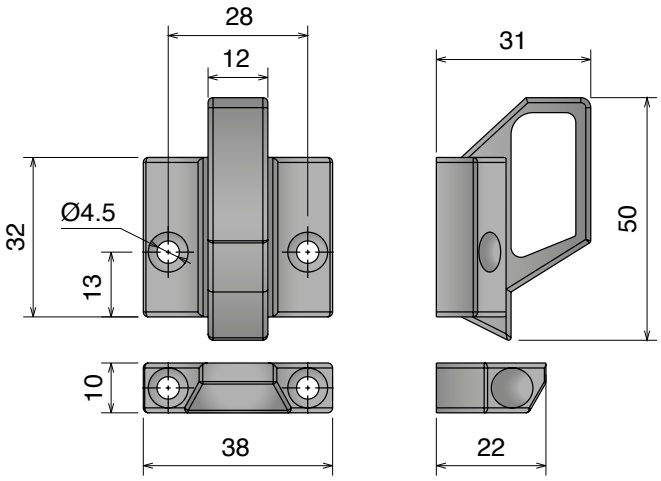

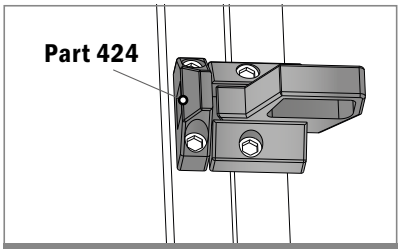

Example of application

Oadby Core product range
Oadby Available from stock in Leicester
Easy Available from stock in Italy
Standard Produced to order in Italy

Movex

529

NOW ALSO IN HYGIENIC BLUE HB

UCFL Series

Pag 530

Pag 533

UCF Series

Pag 536

Pag 539

UCFA Series

Pag 542

UCFA Series

Pag 544

UCFL-H / UCF-H Series

Pag 546

CL / CS Series

Pag 548

SUCF /SUCFL/SUCFK Series

Pag 551

HYGIENIC Series - White/blue

Pag 553

Pag 554

Pag 555

Pag 554

Pag 555

HYGIENIC Accessories

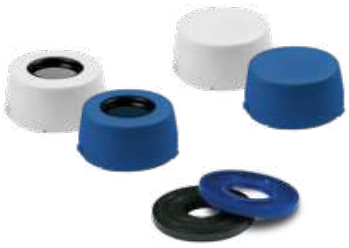

Pag 556

Bearings supports

UCFL

Delivery: Easy Standard

Componenti

• Sede in poliammide rinforzato, con elevata resistenza meccanica e ottima resistenza contro agenti chimici corrosivi quali acqua, oli, benzina e liquidi contenenti alcool.Tutti i nostri cuscinetti possono essere utilizzati ad una temperatura compresa fra 0°C e +80°C.

• I cuscinetti sono realizzati in acciaio al cromo, disponibili anche, su richiesta, nella versione in acciaio inox.
Il cuscinetto all'interno della flangia può essere regolato di 2,5°.

• L'ingrassatore viene realizzato in ferro nichelato, o in acciaio inox nella versione con il cuscinetto in acciaio inox.

• Distanziali realizzati in ottone nichelato per rinforzare il foro di fissaggio.

• Rondella in acciaio inox.

Components

• *Housing in reinforced polyamide, with higher load capacity and good resistance to corrosive chemicals such as water, oils, petrol and alcoholic beverages.*
All our bearings can be used at temperatures between 0°C and +80°C.

• *Ball bearings are made in chrome steel. They are also available, upon request , in stainless steel. Max misalignment between shaft and housing: 2.5°.*

• *Grease nipple are made in nickel plated steel, but they can also be made in stainless steel on the stainless steel bearing.*

• *Spacers from nickel plated brass to reinforce fixing holes.*

• *Washer stainless steel.*

Komponenten

• *Gehäuse gefertigt aus verstärktem Polyamid. Dies gewährleistet eine gute Widerstandsfähigkeit gegenüber mechanischen Einflüssen und eine gute Korrosionsbeständigkeit gegenüber Wasser, Ölen, Benzin, Flüssigkeiten mit Alkohol und Chemikalien. Alle unsere Gehäuse-Lagereinheiten können in einem Temperaturbereich von 0°C bis +80°C eingesetzt werden.*

• *Die Lagereinsätze sind aus Chrom-Stahl, auf Anfrage auch in Edelstahl erhältlich. Alle Lager gleichen einen Fluchtungsfehler von bis zu 2,5°selbstständig aus.*

• *Die Schmiernippel sind aus vernickeltem Stahl (aus Edelstahl wenn die Ausführung mit Edelstahl Einsatz gefragt ist).*

• *Alle Distanzstücke sind aus vernickeltem Messing und verstärken die Befestigungsbohrungen.*

• *Alle Unterlegscheiben aus Edelstahl.*

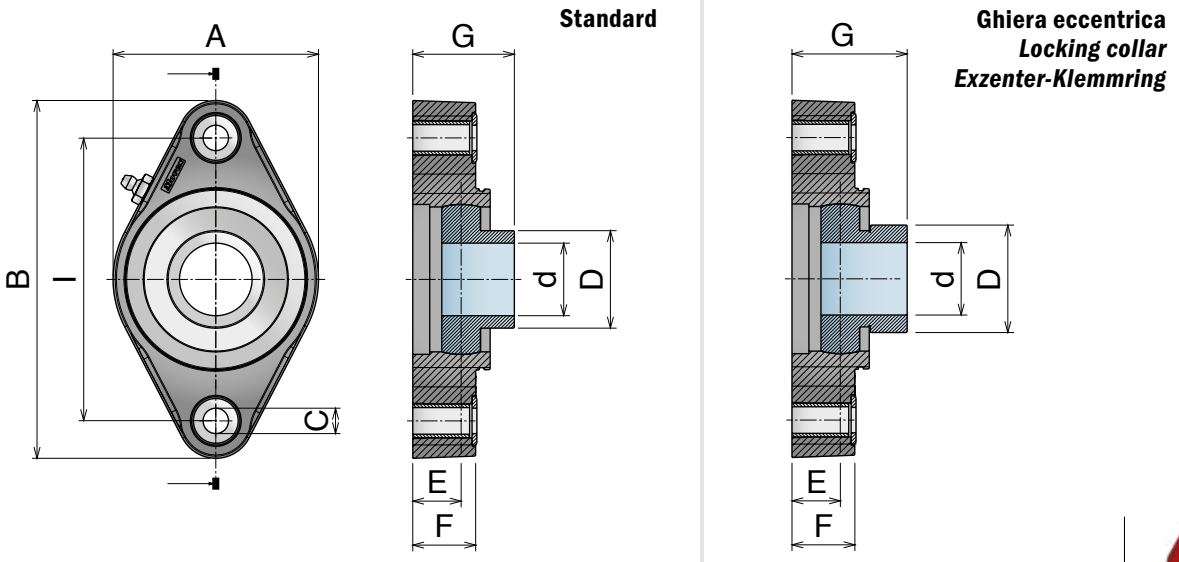

Safety Cap

Inserto standard / *Standard insert / Standard-Flanschlager*

Chrome Steel

Part	Article-Nr.	Series	d	I	A	B	C	D	E	F	G	Article-Nr.
801	80110	UCFL 204	20	90	62	116	11	29	16	20	34	89004
801	80100	UCFL 204	20	90	71	130	11	29	17,5	22,5	33,5	89001
801	80121	UCFL 205/90	25	90	85	116	11	34	14,5	20	34	89005
801	80101	UCFL 205/90	25	90	71	130	11	34	16,8	22,5	36,3	89001
801	80111	UCFL 205	25	99	71	130	11	34	16,8	22,5	36,3	89001
801	80122	UCFL 206/90	30	90	85	116	11	40,3	14,5	20	36,5	89005
801	80132	UCFL 206/99	30	99	85	130	11	40,3	20	26	42	89002
801	80102	UCFL 206/99	30	99	85	148	11	40,3	20	26	42	89002
801	80112	UCFL 206	30	117	85	148	11	40,3	20	26	42	89002
801	80103	UCFL 207/117	35	117	93	148	11	48	19,5	26	43	89003
801	80113	UCFL 207	35	130	93	162	11	48	19,5	26	43	89003
801	80104	UCFL 208/117	40	117	93	148	11	53	19	26	44	89003
801	80114	UCFL 208	40	130	93	162	11	53	19	26	44	89003

Inserto standard / *Standard insert / Standard-Flanschlager*

Stainless Steel

Part	Article-Nr.	Series	d	I	A	B	C	D	E	F	G	Article-Nr.
801	80110SS	UCFL 204	20	90	62	116	11	29	16	20	34	89004
801	80100SS	UCFL 204	20	90	71	130	11	29	17,5	22,5	33,5	89001
801	80121SS	UCFL 205/90	25	90	85	116	11	34	14,5	20	34	89005
801	80101SS	UCFL 205/90	25	90	71	130	11	34	16,8	22,5	36,3	89001
801	80111SS	UCFL 205	25	99	71	130	11	34	16,8	22,5	36,3	89001
801	80122SS	UCFL 206/90	30	90	85	116	11	40,3	14,5	20	36,5	89005
801	80132SS	UCFL 206/99	30	99	85	130	11	40,3	20	26	42	89002
801	80102SS	UCFL 206/99	30	99	85	148	11	40,3	20	26	42	89002
801	80112SS	UCFL 206	30	117	85	148	11	40,3	20	26	42	89002
801	80103SS	UCFL 207/117	35	117	93	148	11	48	19,5	26	43	89003
801	80113SS	UCFL 207	35	130	93	162	11	48	19,5	26	43	89003
801	80104SS	UCFL 208/117	40	117	93	148	11	53	19	26	44	89003
801	80114SS	UCFL 208	40	130	93	162	11	53	19	26	44	89003

Inserto con ghiera eccentrica / *Insert with locking collar / Flanschlager mit Exzenter-Klemmring*

Chrome Steel

Part	Article-Nr.	Series	d	I	A	B	C	D	E	F	G	Article-Nr.
802	80210	UCFL 204	20	90	62	116	11	33,3	16	20	39,9	89004
802	80200	UCFL 204	20	90	71	130	11	33,3	17,5	22,5	41,4	89001
802	80221	UCFL 205/90	25	90	85	116	11	38,1	14,5	20	37,9	89005
802	80201	UCFL 205/90	25	90	71	130	11	38,1	16,8	22,5	40,2	89001
802	80211	UCFL 205	25	99	71	130	11	38,1	16,8	22,5	40,2	89001
802	80222	UCFL 206/90	30	90	85	116	11	44,5	14,5	20	42,2	89005
802	80232	UCFL 206/99	30	99	85	130	11	44,5	20	26	47,7	89002
802	80202	UCFL 206/99	30	99	85	148	11	44,5	20	26	47,7	89002
802	80212	UCFL 206	30	117	85	148	11	44,5	20	26	47,7	89002
802	80203	UCFL 207/117	35	117	93	148	11	55,6	19,5	26	49,9	89003
802	80213	UCFL 207	35	130	93	162	11	55,6	19,5	26	49,9	89003
802	80204	UCFL 208/117	40	117	93	148	11	60,3	19	26	53,7	89003
802	80214	UCFL 208	40	130	93	162	11	60,3	19	26	53,7	89003

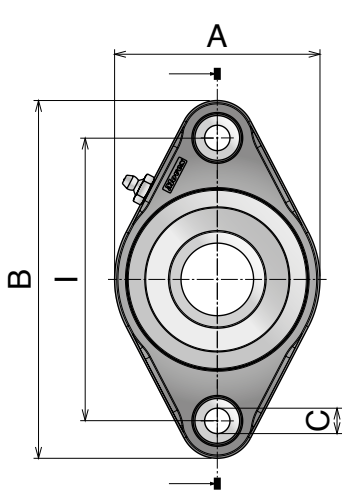

Standard

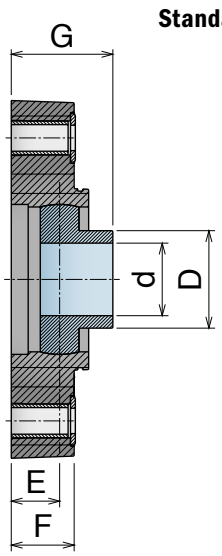

Ghiera eccentrica
Locking collar
Exzenter-Klemmring

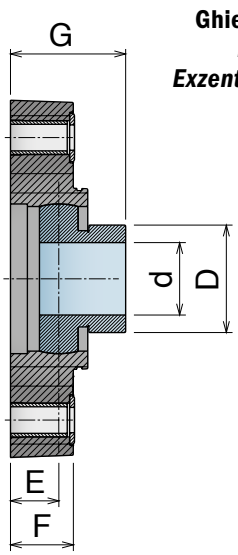

Safety Cap

Inserto standard / *Standard insert / Standard-Flanschlager*

	Part	Article-Nr.	Series	d	I	A	B	C	D	E	F	G	Article-Nr.
Chrome Steel	822	82205	UCFL 204/76,5	20	76,4	55,9	100	10,2	29	15,5	12	33,5	89007
	822	82210	UCFL 204	20	90	62	116	11	29	16	20	34	89004
	822	82201	UCFL 205/90	25	90	71	130	10,2	34	16,8	22,5	36,3	89001
	822	82211	UCFL 205	25	99	71	130	11	34	16,8	22,5	36,3	89001
	822	82222	UCFL 206/90	30	90	85	116	10,2	40,3	14,5	20	36,5	89005
	822	82212	UCFL 206	30	117	85	148	11	40,3	20	26	42	89002
	822	82203	UCFL 207/117	35	117	93	148	11	48	19,5	26	43	89003
	822	82213	UCFL 207	35	130	93	162	11	48	19,5	26	43	89003
	822	82204	UCFL 208/117	40	117	93	148	11	53	19	26	44	89003

Inserto standard / *Standard insert / Standard-Flanschlager*

	Part	Article-Nr.	Series	d	I	A	B	C	D	E	F	G	Article-Nr.
Stainless Steel	822	82205SS	UCFL 204/76,5	20	76,4	55,9	100	10,2	29	15,5	12	33,5	89007
	822	82210SS	UCFL 204	20	90	62	116	11	29	16	20	34	89004
	822	82201SS	UCFL 205/90	25	90	71	130	10,2	34	16,8	22,5	36,3	89001
	822	82211SS	UCFL 205	25	99	71	130	11	34	16,8	22,5	36,3	89001
	822	82222SS	UCFL 206/90	30	90	85	116	10,2	40,3	14,5	20	36,5	89005
	822	82212SS	UCFL 206	30	117	85	148	11	40,3	20	26	42	89002
	822	82203SS	UCFL 207/117	35	117	93	148	11	48	19,5	26	43	89003
	822	82213SS	UCFL 207	35	130	93	162	11	48	19,5	26	43	89003
	822	82204SS	UCFL 208/117	40	117	93	148	11	53	19	26	44	89003

Inserto con ghiera eccentrica / *Insert with locking collar / Flanschlager mit Exzenter-Klemmring*

	Part	Article-Nr.	Series	d	I	A	B	C	D	E	F	G	Article-Nr.
Chrome Steel	823	82305	UCFL 204/76,5	20	76,4	55,9	100	10,2	33,3	16	12	33,5	89007
	823	82310	UCFL 204	20	90	62	116	11	33,3	16	20	39,9	89004
	823	82301	UCFL 205/90	25	90	71	130	10,2	38,1	16,8	22,5	36,3	89001
	823	82311	UCFL 205	25	99	71	130	11	38,1	16,8	22,5	40,2	89001
	823	82322	UCFL 206/90	30	90	85	116	10,2	44,5	14,4	20	36,5	89005
	823	82312	UCFL 206	30	117	85	148	11	44,5	20	26	47,7	89002
	823	82303	UCFL 207/117	35	117	93	148	11	55,6	19,5	26	43	89003
	823	82313	UCFL 207	35	130	93	162	11	55,6	19,5	26	49,9	89003
	823	82304	UCFL 208/117	40	117	93	148	11	60,3	19	26	53,7	89003

SOLID HOUSING

Oadby Core product range

Oadby Available from stock in Leicester | Easy Available from stock in Italy | Standard Produced to order in Italy

Movex

UCFL

Componenti

- Sede in poliammide rinforzato, con elevata resistenza meccanica e ottima resistenza contro agenti chimici corrosivi quali acqua, oli, benzina e liquidi contenenti alcool. Tutti i nostri cuscinetti possono essere utilizzati ad una temperatura compresa fra 0°C e +80°C.
- I cuscinetti sono realizzati in acciaio al cromo, disponibili anche, su richiesta, nella versione in acciaio inox.
Il cuscinetto all'interno della flangia può essere regolato di 2,5°.
- L'ingrassatore viene realizzato in ferro nichelato, o in acciaio inox nella versione con il cuscinetto in acciaio inox.
- Distanziali realizzati in ottone nichelato per rinforzare il foro di fissaggio.
- Rondella in acciaio inox.
- Coperchio di sicurezza in PP.
- Anello di tenuta in gomma NBR.
- O-ring in NBR rubber.

Components

- *Housing in reinforced polyamide, with higher load capacity and good resistance to corrosive chemicals such as water, oils, petrol and alcoholic beverages.*
All our bearings can be used at temperatures between 0°C and +80°C.
- *Ball bearings are made in chrome steel. They are also available, upon request, in stainless steel. Max misalignment between shaft and housing: 2.5°.*
- *Grease nipple are made in nickel plated steel, but they can also be made in stainless steel on the stainless steel bearing.*
- *Spacers from nickel plated brass to reinforce fixing holes.*
- *Washer stainless steel.*
- *Clip-on safety cap in PP.*
- *Rotary shaft seal ring in NBR rubber.*
- *O-ring in NBR rubber.*

Komponenten

- *Gehäuse gefertigt aus verstärktem Polyamid Dies gewährleistet eine gute Widerstandsfähigkeit gegenüber mechanischen Einflüssen und eine gute Korrosionsbeständigkeit gegenüber Wasser, Ölen, Benzin, Flüssigkeiten mit Alkohol und Chemikalien. Alle unsere Gehäuse-Lagereinheiten können in einem Temperaturbereich von 0°C bis +80°C eingesetzt werden.*
- *Die Lagereinsätze sind aus Chrom-Stahl, auf Anfrage auch in Edelstahl erhältlich. Alle Lager gleichen eine Fluchtungsfehler von bis zu 2,5° selbstständig aus.*
- *Die Schmiernippel sind aus vernickeltem Stahl (aus Edelstahl wenn die Ausführung mit Edelstahl Einsatz gefragt ist).*
- *Alle Distanzstücke sind aus vernickeltem Messing und verstärkten die Befestigungsbohrungen.*
- *Alle Unterlegscheiben aus Edelstahl.*
- *Schutzkappe aus PP.*
- *Dichtringe aus NBR-Gummi.*
- *O-Ringe aus NBR-Gummi.*

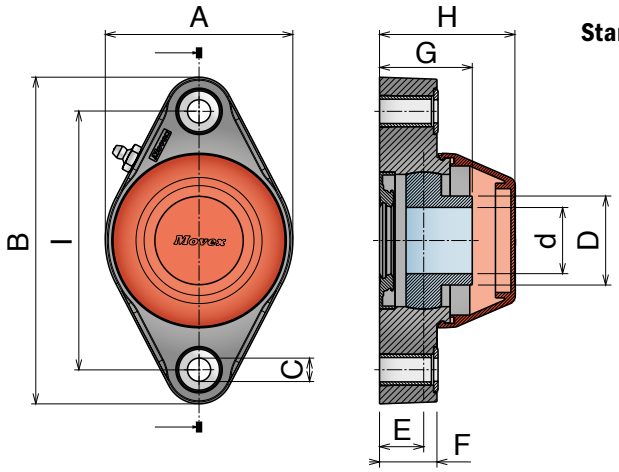

Standard

Ghiera eccentrica
Locking collar
Exzenter-Klemmring

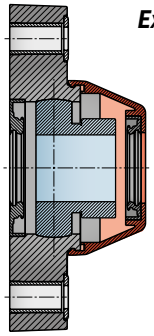

Inserto standard, con guarnizioni, versione aperta e chiusa / *Standard insert, sealed, open and close version / Standard-Flanschlager, abgedichtet, offene und geschlossene Version*

Chrome Steel

Part	Art-close	Part	Art-open	Series	d	I	A	B	C	D	E	F	G	H
803	80310	804	80410	UCFL 204	20	90	62	116	11	29	16	20	34	51,5
803	80300	804	80400	UCFL 204	20	90	71	130	11	29	17,5	22,5	33,5	52
803	80321	804	80421	UCFL 205/90	25	90	85	116	11	34	14,5	20	34	55,5
803	80301	804	80401	UCFL 205/90	25	90	71	130	11	34	16,8	22,5	36,3	52
803	80311	804	80411	UCFL 205	25	99	71	130	11	34	16,8	22,5	36,3	52
803	80322	804	80422	UCFL 206/90	30	90	85	116	11	40,3	14,5	20	36,5	55,5
803	80332	804	80432	UCFL 206/99	30	99	85	130	11	40,3	20	26	42	61,5
803	80302	804	80402	UCFL 206/99	30	99	85	148	11	40,3	20	26	42	61,5
803	80312	804	80412	UCFL 206	30	117	85	148	11	40,3	20	26	42	61,5
803	80303	804	80403	UCFL 207/117	35	117	93	148	11	48	19,5	26	43	66,5
803	80313	804	80413	UCFL 207	35	130	93	162	11	48	19,5	26	43	66,5
803	80304	804	80404	UCFL 208/117	40	117	93	148	11	53	19	26	44	66,5
803	80314	804	80414	UCFL 208	40	130	93	162	11	53	19	26	44	66,5

Inserto standard, con guarnizioni, versione aperta e chiusa / *Standard insert, sealed, open and close version / Standard-Flanschlager, abgedichtet, offene und geschlossene Version*

Stainless Steel

Part	Art-close	Part	Art-open	Series	d	I	A	B	C	D	E	F	G	H
803	80310SS	804	80410SS	UCFL 204	20	90	62	116	11	29	16	20	34	51,5
803	80300SS	804	80400SS	UCFL 204	20	90	71	130	11	29	17,5	22,5	33,5	52
803	80321SS	804	80421SS	UCFL 205/90	25	90	85	116	11	34	14,5	20	34	55,5
803	80301SS	804	80401SS	UCFL 205/90	25	90	71	130	11	34	16,8	22,5	36,3	52
803	80311SS	804	80411SS	UCFL 205	25	99	71	130	11	34	16,8	22,5	36,3	52
803	80322SS	804	80422SS	UCFL 206/90	30	90	85	116	11	40,3	14,5	20	36,5	55,5
803	80332SS	804	80432SS	UCFL 206/99	30	99	85	130	11	40,3	20	26	42	61,5
803	80302SS	804	80402SS	UCFL 206/99	30	99	85	148	11	40,3	20	26	42	61,5
803	80312SS	804	80412SS	UCFL 206	30	117	85	148	11	40,3	20	26	42	61,5
803	80303SS	804	80403SS	UCFL 207/117	35	117	93	148	11	48	19,5	26	43	66,5
803	80313SS	804	80413SS	UCFL 207	35	130	93	162	11	48	19,5	26	43	66,5
803	80304SS	804	80404SS	UCFL 208/117	40	117	93	148	11	53	19	26	44	66,5
803	80314SS	804	80414SS	UCFL 208	40	130	93	162	11	53	19	26	44	66,5

Inserto "long life", con guarnizioni, versione aperta e chiusa / *"Long life" insert, sealed, open and close version / "Long Life"-Flanschlager, abgedichtet, offene und geschlossene Version*

Chrome Steel "Long life"

Part	Art-close	Part	Art-open	Series	d	I	A	B	C	D	E	F	G	H
803	80310L	804	80410L	UCFL 204	20	90	62	116	11	29	16	20	34	51,5
803	80300L	804	80400L	UCFL 204	20	90	71	130	11	29	17,5	22,5	33,5	52
803	80321L	804	80421L	UCFL 205/90	25	90	85	116	11	34	14,5	20	34	55,5
803	80301L	804	80401L	UCFL 205/90	25	90	71	130	11	34	16,8	22,5	36,3	52
803	80311L	804	80411L	UCFL 205	25	99	71	130	11	34	16,8	22,5	36,3	52
803	80322L	804	80422L	UCFL 206/90	30	90	85	116	11	40,3	14,5	20	36,5	55,5
803	80332L	804	80432L	UCFL 206/99	30	99	85	130	11	40,3	20	26	42	61,5
803	80302L	804	80402L	UCFL 206/99	30	99	85	148	11	40,3	20	26	42	61,5
803	80312L	804	80412L	UCFL 206	30	117	85	148	11	40,3	20	26	42	61,5
803	80303L	804	80403L	UCFL 207/117	35	117	93	148	11	48	19,5	26	43	66,5
803	80313L	804	80413L	UCFL 207	35	130	93	162	11	48	19,5	26	43	66,5
803	80304L	804	80404L	UCFL 208/117	40	117	93	148	11	53	19	26	44	66,5
803	80314L	804	80414L	UCFL 208	40	130	93	162	11	53	19	26	44	66,5

Inserto con ghiera eccentrica, guarnizioni, versione aperta e chiusa / *Insert with locking collar, sealed, open and close version / Flanschlager mit Exzenter-Klemmring, abgedichtet, offene und geschlossene Version*

Chrome Steel

Part	Art-close	Part	Art-open	Series	d	I	A	B	C	D	E	F	G	H
805	80510	806	80610	UCFL 204	20	90	62	116	11	33,3	16	20	39,9	51,5
805	80500	806	80600	UCFL 204	20	90	71	130	11	33,3	17,5	22,5	41,4	52
805	80521	806	80621	UCFL 205/90	25	90	85	116	11	38,1	14,5	20	37,9	55,5
805	80501	806	80601	UCFL 205/90	25	90	71	130	11	38,1	16,8	22,5	40,2	52
805	80511	806	80611	UCFL 205	25	99	71	130	11	38,1	16,8	22,5	40,2	52
805	80522	806	80622	UCFL 206/90	30	90	85	116	11	44,5	14,5	20	42,2	55,5
805	80532	806	80632	UCFL 206/99	30	99	85	130	11	44,5	20	26	47,7	61,5
805	80502	806	80602	UCFL 206/99	30	99	85	148	11	44,5	20	26	47,7	61,5
805	80512	806	80612	UCFL 206	30	117	85	148	11	44,5	20	26	47,7	61,5
805	80503	806	80603	UCFL 207/117	35	117	93	148	11	55,6	19,5	26	49,9	66,5
805	80513	806	80613	UCFL 207	35	130	93	162	11	55,6	19,5	26	49,9	66,5
805	80504	806	80604	UCFL 208/117	40	117	93	148	11	60,3	19	26	53,7	66,5
805	80514	806	80614	UCFL 208	40	130	93	162	11	60,3	19	26	53,7	66,5

Oadby Core product range

Oadby Available from stock in Leicester | Easy Available from stock in Italy | Standard Produced to order in Italy

Movex

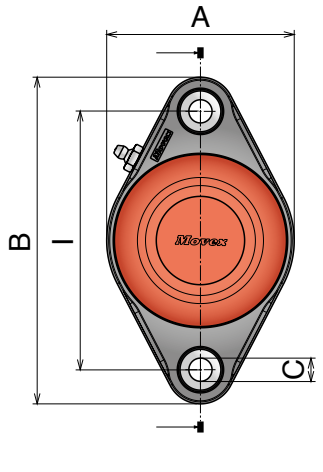

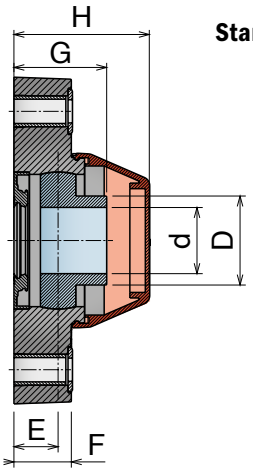

Standard

Ghiera eccentrica
Locking collar
Exzenter-Klemmring

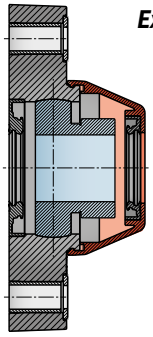

SOLID HOUSING

Inserto standard, con guarnizioni, versione aperta e chiusa / *Standard insert, sealed, open and close version / Standard-Flanschlager, abgedichtet, offene und geschlossene Version*

Chrome Steel

Part	Art-close	Part	Art-open	Series	d	I	A	B	C	D	E	F	G	H
824	82405	825	82505	UCFL 204/76,5	20	76,5	56	100	10,2	29	15,5	12	26	49
824	82410	825	82510	UCFL 204	20	90	62	116	11	29	16	20	34	51,5
824	82401	825	82501	UCFL 205/90	25	90	71	130	10,2	34	16,8	22,5	36,3	52
824	82411	825	82511	UCFL 205	25	99	71	130	11	34	16,8	22,5	36,3	52
824	82422	825	82522	UCFL 206/90	30	90	85	116	10,2	40,3	14,5	20	36,5	55,5
824	82412	825	82512	UCFL 206	30	117	85	148	11	40,3	20	26	42	61,5
824	82403	825	82503	UCFL 207/117	35	117	93	148	11	48	19,5	26	43	66,5
824	82413	825	82513	UCFL 207	35	130	93	162	11	48	19,5	26	43	66,5
824	82404	825	82504	UCFL 208/117	40	117	93	148	11	53	19	26	44	66,5

Inserto standard, con guarnizioni, versione aperta e chiusa / *Standard insert, sealed, open and close version / Standard-Flanschlager, abgedichtet, offene und geschlossene Version*

Stainless Steel

Part	Art-close	Part	Art-open	Series	d	I	A	B	C	D	E	F	G	H
824	82405SS	825	82505SS	UCFL 204/76,5	20	76,5	56	100	10,2	29	15,5	12	26	49
824	82410SS	825	82510SS	UCFL 204	20	90	62	116	11	29	16	20	34	51,5
824	82401SS	825	82501SS	UCFL 205/90	25	90	71	130	10,2	34	16,8	22,5	36,3	52
824	82411SS	825	82511SS	UCFL 205	25	99	71	130	11	34	16,8	22,5	36,3	52
824	82422SS	825	82522SS	UCFL 206/90	30	90	85	116	10,2	40,3	14,5	20	36,5	55,5
824	82412SS	825	82512SS	UCFL 206	30	117	85	148	11	40,3	20	26	42	61,5
824	82403SS	825	82503SS	UCFL 207/117	35	117	93	148	11	48	19,5	26	43	66,5
824	82413SS	825	82513SS	UCFL 207	35	130	93	162	11	48	19,5	26	43	66,5
824	82404SS	825	82504SS	UCFL 208/117	40	117	93	148	11	53	19	26	44	66,5

Inserto "long life", con guarnizioni, versione aperta e chiusa / *"Long life" insert, sealed, open and close version / "Long Life"-Flanschlager, abgedichtet, offene und geschlossene Version*

"Long life"

Part	Art-close	Part	Art-open	Series	d	I	A	B	C	D	E	F	G	H
824	82405L	825	82505L	UCFL 204/76,5	20	76,5	56	100	10,2	29	15,5	12	26	49
824	82410L	825	82510L	UCFL 204	20	90	62	116	11	29	16	20	34	51,5
824	82401L	825	82501L	UCFL 205/90	25	90	71	130	10,2	34	16,8	22,5	36,3	52
824	82411L	825	82511L	UCFL 205	25	99	71	130	11	34	16,8	22,5	36,3	52
824	82422L	825	82522L	UCFL 206/90	30	90	85	116	10,2	40,3	14,5	20	36,5	55,5
824	82412L	825	82512L	UCFL 206	30	117	85	148	11	40,3	20	26	42	61,5
824	82403L	825	82503L	UCFL 207/117	35	117	93	148	11	48	19,5	26	43	66,5
824	82413L	825	82513L	UCFL 207	35	130	93	162	11	48	19,5	26	43	66,5
824	82404L	825	82504L	UCFL 208/117	40	117	93	148	11	53	19	26	44	66,5

Inserto con ghiera eccentrica, guarnizioni, versione aperta e chiusa / *Insert with locking collar, sealed, open and close version / Flanschlager mit Exzenter-Klemmring, abgedichtet, offene und geschlossene Version*

Chrome Steel

Part	Art-close	Part	Art-open	Series	d	I	A	B	C	D	E	F	G	H
826	82605	827	82705	UCFL 204/76,5	20	76,5	56	100	10,2	33,3	15,5	12	39,4	49
826	82610	827	82710	UCFL 204	20	90	62	116	11	33,3	16	20	39,9	51,5
826	82601	827	82701	UCFL 205/90	25	90	71	130	10,2	38,1	16,8	22,5	40,2	52
826	82611	827	82711	UCFL 205	25	99	71	130	11	38,1	16,8	22,5	40,2	52
826	82622	827	82722	UCFL 206/90	30	90	85	116	10,2	44,5	14,5	20	42,2	55,5
826	82612	827	82712	UCFL 206	30	117	85	148	11	44,5	20	26	47,7	61,5
826	82603	827	82703	UCFL 207/117	35	117	93	148	11	55,6	19,5	26	49,9	66,5
826	82613	827	82713	UCFL 207	35	130	93	162	11	55,6	19,5	26	49,9	66,5
826	82604	827	82704	UCFL 208/117	40	117	93	148	11	60,3	19	26	53,7	66,5

UCF

Delivery: Easy Standard

Componenti

• Sede in poliammide rinforzato, con elevata resistenza meccanica e ottima resistenza contro agenti chimici corrosivi quali acqua, oli, benzina e liquidi contenenti alcool. Tutti i nostri cuscinetti possono essere utilizzati ad una temperatura compresa fra 0°C e +80°C.

• I cuscinetti sono realizzati in acciaio al cromo, disponibili anche, su richiesta, nella versione in acciaio inox.
Il cuscinetto all'interno della flangia può essere regolato di 2,5°.

• L'ingrassatore viene realizzato in ferro nichelato, o in acciaio inox nella versione con il cuscinetto in acciaio inox.

• Distanziali realizzati in ottone nichelato per rinforzare il foro di fissaggio.

• Rondella in acciaio inox.

Components

• *Housing in reinforced polyamide, with higher load capacity and good resistance to corrosive chemicals such as water, oils, petrol and alcoholic beverages.*
All our bearings can be used at temperatures between 0°C and +80°C.

• *Ball bearings are made in chrome steel. They are also available, upon request , in stainless steel. Max misalignment between shaft and housing: 2.5°.*

• *Grease nipple are made in nickel plated steel, but they can also be made in stainless steel on the stainless steel bearing.*

• *Spacers from nickel plated brass to reinforce fixing holes.*

• *Washer stainless steel.*

Komponenten

• *Gehäuse gefertigt aus verstärktem Polyamid. Dies gewährleistet eine gute Widerstandsfähigkeit gegenüber mechanischen Einflüssen und eine gute Korrosionsbeständigkeit gegenüber Wasser, Ölen, Benzin, Flüssigkeiten mit Alkohol und Chemikalien. Alle unsere Gehäuse-Lagereinheiten können in einem Temperaturbereich von 0°C bis +80°C eingesetzt werden.*

• *Die Lagereinsätze sind aus Chrom-Stahl, auf Anfrage auch in Edelstahl erhältlich. Alle Lager gleichen einen Fluchtungsfehler von bis zu 2,5°selbstständig aus.*

• *Die Schmiernippel sind aus vernickeltem Stahl (aus Edelstahl wenn die Ausführung mit Edelstahl Einsatz gefragt ist).*

• *Alle Distanzstücke sind aus vernickeltem Messing und verstärken die Befestigungsbohrungen.*

• *Alle Unterlegscheiben aus Edelstahl.*

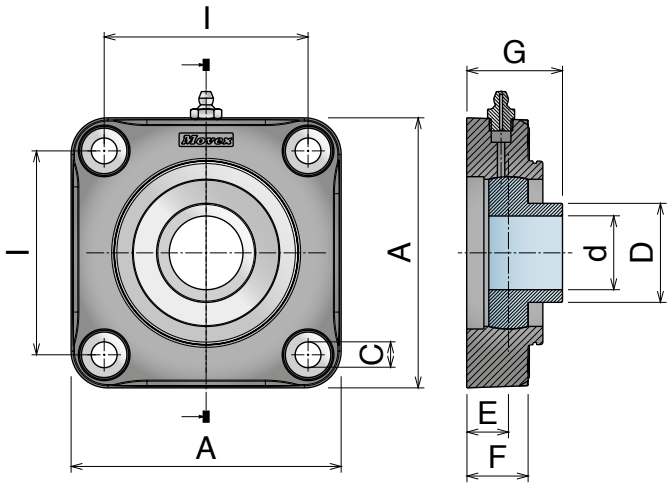

Safety Cap

Inserto standard / *Standard insert / Standard-Flanschlager*

Chrome Steel

Part	Article-Nr.	Series	d	I	A	C	D	E	F	G	Article-Nr.
807	80701	UCF 205	25	70	98	11	34	16	22	35,5	89001
807	80702	UCF 206	30	83	110	11	40,3	17	25	39	89002
807	80703	UCF 207/83	35	83	110	11	48	20	25	43,5	89003
807	80713	UCF 207	35	92	118	11	48	20	25	43,5	89003
807	80704	UCF 208/83	40	83	110	11	53	19,5	25	44,5	89003
807	80714	UCF 208	40	102	130	11	53	19	25	44	89003

Inserto standard / *Standard insert / Standard-Flanschlager*

Stainless Steel

Part	Article-Nr.	Series	d	I	A	C	D	E	F	G	Article-Nr.
807	80701SS	UCF 205	25	70	98	11	34	16	22	35,5	89001
807	80702SS	UCF 206	30	83	110	11	40,3	17	25	39	89002
807	80703SS	UCF 207/83	35	83	110	11	48	20	25	43,5	89003
807	80713SS	UCF 207	35	92	118	11	48	20	25	43,5	89003
807	80704SS	UCF 208/83	40	83	110	11	53	19,5	25	44,5	89003
807	80714SS	UCF 208	40	102	130	11	53	19	25	44	89003

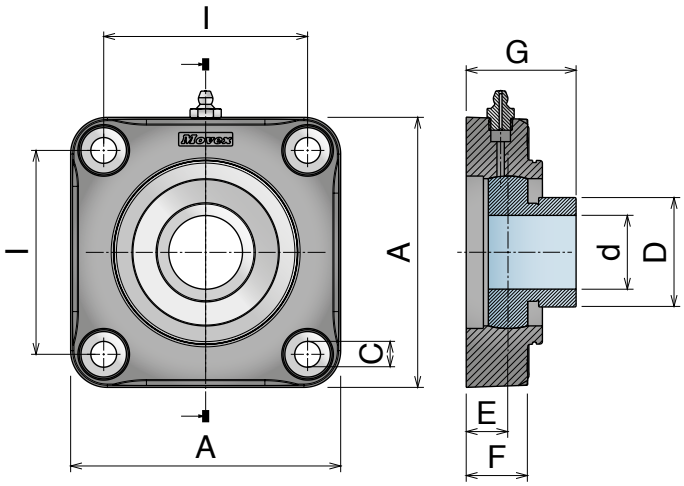

Safety Cap

Inserto con ghiera eccentrica / *Insert with locking collar / Flanschlager mit Exzenter-Klemmring*

Chrome Steel

Part	Article-Nr.	Series	d	I	A	C	D	E	F	G	Article-Nr.
808	80801	UCF 205	25	70	98	11	38,1	16	22	39,4	89001
808	80802	UCF 206	30	83	110	11	44,5	17	25	44,7	89002
808	80803	UCF 207/83	35	83	110	11	55,6	20	25	50,4	89003
808	80813	UCF 207	35	92	118	11	55,6	20	25	50,4	89003
808	80804	UCF 208/83	40	83	110	11	60,3	19,5	25	54,2	89003
808	80814	UCF 208	40	102	130	11	60,3	19	25	53,7	89003

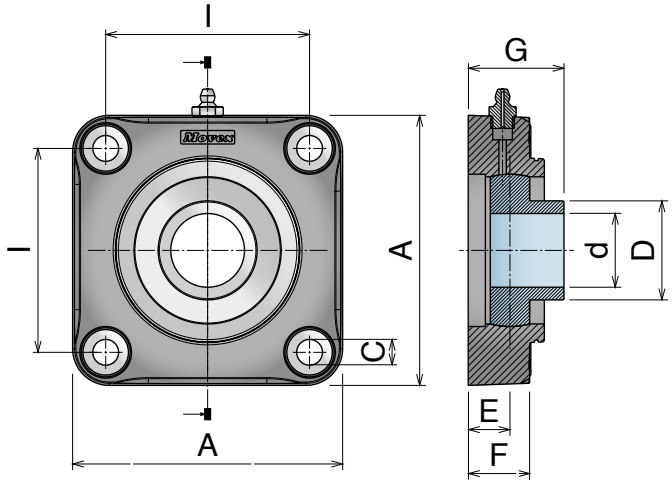

Safety Cap

Inserto standard / *Standard insert / Standard-Flanschlager*

Chrome Steel

Part	Article-Nr.	Series	d	I	A	C	D	E	F	G	Article-Nr.
828	82801	UCF 205	25	70	98	11	34	16	22	35,5	89001
828	82802	UCF 206	30	83	110	11	40,3	17	25	39	89002
828	82813	UCF 207	35	92	118	11	48	20	25	43,5	89003
828	82804	UCF 208/83	40	83	110	11	53	19,5	25	44,5	89003

Inserto standard / *Standard insert / Standard-Flanschlager*

Stainless Steel

Part	Article-Nr.	Series	d	I	A	C	D	E	F	G	Article-Nr.
828	82801SS	UCF 205	25	70	98	11	34	16	22	35,5	89001
828	82802SS	UCF 206	30	83	110	11	40,3	17	25	39	89002
828	82813SS	UCF 207	35	92	118	11	48	20	25	43,5	89003
828	82804SS	UCF 208/83	40	83	110	11	53	19,5	25	44,5	89003

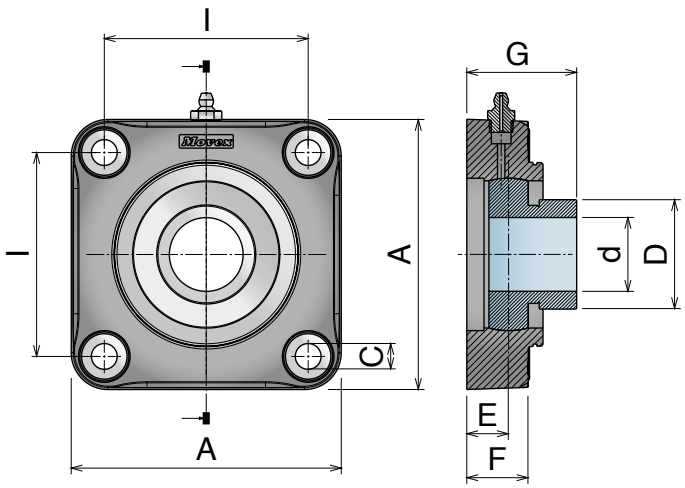

Safety Cap

Inserto con ghiera eccentrica / *Insert with locking collar / Flanschlager mit Exzenter-Klemmring*

Chrome Steel

Part	Article-Nr.	Series	d	I	A	C	D	E	F	G	Article-Nr.
829	82901	UCF 205	25	70	98	11	38,1	16	22	39,4	89001
829	82902	UCF 206	30	83	110	11	44,5	17	25	44,7	89002
829	82913	UCF 207	35	92	118	11	55,6	20	25	50,4	89003
829	82904	UCF 208/83	40	83	110	11	60,3	19,5	25	54,2	89003

UCF

Delivery: Easy Standard

Componenti

- Sede in poliammide rinforzato, con elevata resistenza meccanica e ottima resistenza contro agenti chimici corrosivi quali acqua, oli, benzina e liquidi contenenti alcool. Tutti i nostri cuscinetti possono essere utilizzati ad una temperatura compresa fra 0°C e +80°C.
- I cuscinetti sono realizzati in acciaio al cromo, disponibili anche, su richiesta, nella versione in acciaio inox.
Il cuscinetto all'interno della flangia può essere regolato di 2,5°.
- L'ingrassatore viene realizzato in ferro nichelato, o in acciaio inox nella versione con il cuscinetto in acciaio inox.
- Distanziali realizzati in ottone nichelato per rinforzare il foro di fissaggio.
- Rondella in acciaio inox.
- Coperchio di sicurezza in PP.
- Anello di tenuta in gomma NBR.
- O-ring in NBR rubber.

Components

- *Housing in reinforced polyamide, with higher load capacity and good resistance to corrosive chemicals such as water, oils, petrol and alcoholic beverages.*
All our bearings can be used at temperatures between 0°C and +80°C.
- *Ball bearings are made in chrome steel. They are also available, upon request, in stainless steel. Max misalignment between shaft and housing: 2.5°.*
- *Grease nipple are made in nickel plated steel, but they can also be made in stainless steel on the stainless steel bearing.*
- *Spacers from nickel plated brass to reinforce fixing holes.*
- *Washer stainless steel.*
- *Clip-on safety cap in PP.*
- *Rotary shaft seal ring in NBR rubber.*
- *O-ring in NBR rubber.*

Komponenten

- *Gehäuse gefertigt aus verstärktem Polyamid Dies gewährleistet eine gute Widerstandsfähigkeit gegenüber mechanischen Einflüssen und eine gute Korrosionsbeständigkeit gegenüber Wasser, Ölen, Benzin, Flüssigkeiten mit Alkohol und Chemikalien. Alle unsere Gehäuse-Lagereinheiten können in einem Temperaturbereich von 0°C bis +80°C eingesetzt werden.*
- *Die Lagereinsätze sind aus Chrom-Stahl, auf Anfrage auch in Edelstahl erhältlich. Alle Lager gleichen eine Fluchtungsfehler von bis zu 2,5° selbstständig aus.*
- *Die Schmiernippel sind aus vernickeltem Stahl (aus Edelstahl wenn die Ausführung mit Edelstahl Einsatz gefragt ist).*
- *Alle Distanzstücke sind aus vernickeltem Messing und verstärkten die Befestigungsbohrungen.*
- *Alle Unterlegscheiben aus Edelstahl.*
- *Schutzkappe aus PP.*
- *Dichtringe aus NBR-Gummi.*
- *O-Ringe aus NBR-Gummi.*

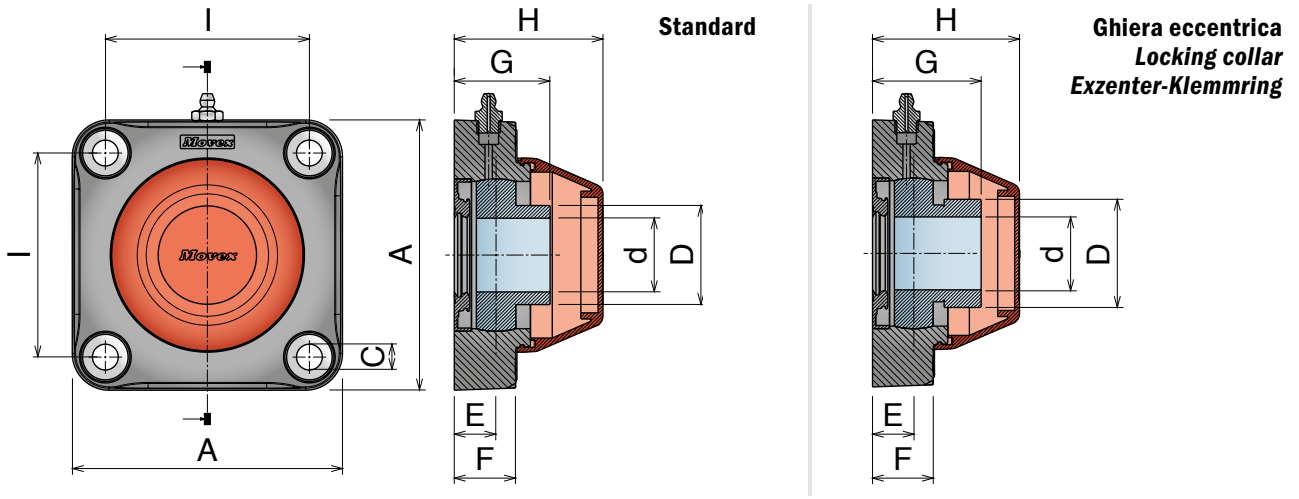

Inserto standard, con guarnizioni, versione aperta e chiusa
Standard insert, sealed, open and close version/Standard-Flanschlager, abgedichtet, offene und geschlossene Version

Chrome Steel

Part	Art-close	Part	Art-open	Series	d	I	A	C	D	E	F	G	H
809	80901	810	81001	UCF 205	25	70	98	11	34	16	22	35,5	51,5
809	80902	810	81002	UCF 206	30	83	110	11	40,3	17	25	39	60,5
809	80903	810	81003	UCF 207/83	35	83	110	11	48	20	25	43,5	65,5
809	80913	810	81013	UCF 207	35	92	118	11	48	20	25	43,5	65,5
809	80904	810	81004	UCF 208/83	40	83	110	11	53	19,5	25	44,5	65,5
809	80914	810	81014	UCF 208	40	102	130	11	53	19	25	44	65,5

Inserto standard, con guarnizioni, versione aperta e chiusa
Standard insert, sealed, open and close version/Standard-Flanschlager, abgedichtet, offene und geschlossene Version

Stainless Steel

Part	Art-close	Part	Art-open	Series	d	I	A	C	D	E	F	G	H
809	80901SS	810	81001SS	UCF 205	25	70	98	11	34	16	22	35,5	51,5
809	80902SS	810	81002SS	UCF 206	30	83	110	11	40,3	17	25	39	60,5
809	80903SS	810	81003SS	UCF 207/83	35	83	110	11	48	20	25	43,5	65,5
809	80913SS	810	81013SS	UCF 207	35	92	118	11	48	20	25	43,5	65,5
809	80904SS	810	81004SS	UCF 208/83	40	83	110	11	53	19,5	25	44,5	65,5
809	80914SS	810	81014SS	UCF 208	40	102	130	11	53	19	25	44	65,5

Inserto "Long life", con guarnizioni, versione aperta e chiusa
"Long life" insert, sealed, open and close version/"Long life"-Flanschlager, abgedichtet, offene und geschlossene Version

"Long life"

Part	Art-close	Part	Art-open	Series	d	I	A	C	D	E	F	G	H
809	80901L	810	81001L	UCF 205	25	70	98	11	34	16	22	35,5	51,5
809	80902L	810	81002L	UCF 206	30	83	110	11	40,3	17	25	39	60,5
809	80903L	810	81003L	UCF 207/83	35	83	110	11	48	20	25	43,5	65,5
809	80913L	810	81013L	UCF 207	35	92	118	11	48	20	25	43,5	65,5
809	80904L	810	81004L	UCF 208/83	40	83	110	11	53	19,5	25	44,5	65,5
809	80914L	810	81014L	UCF 208	40	102	130	11	53	19	25	44	65,5

Inserto con ghiera eccentrica, guarnizioni, versione aperta e chiusa
Insert with locking collar, sealed, open and close version/Flanschlager mit Exzenter-Klemmring, abgedichtet, offene und geschlossene Version

Chrome Steel

Part	Art-close	Part	Art-open	Series	d	I	A	C	D	E	F	G	H
811	81101	812	81201	UCF 205	25	70	98	11	38,1	16	22	39,4	51,5
811	81102	812	81202	UCF 206	30	83	110	11	44,5	17	25	44,7	60,5
811	81103	812	81203	UCF 207/83	35	83	110	11	55,6	20	25	50,4	65,5
811	81113	812	81213	UCF 207	35	92	118	11	55,6	20	25	50,4	65,5
811	81104	812	81204	UCF 208/83	40	83	110	11	60,3	19,5	25	54,2	65,5
811	81114	812	81214	UCF 208	40	102	130	11	60,3	19	25	53,7	65,5

Oadby Core product range

Oadby Available from stock in Leicester | Easy Available from stock in Italy | Standard Produced to order in Italy

Movex

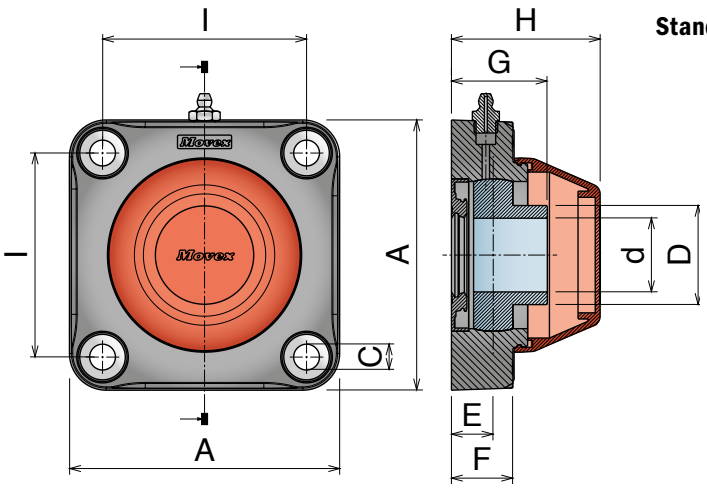

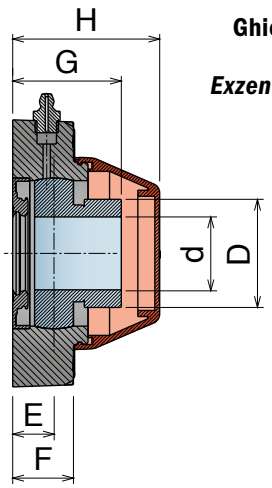

Inserto standard, con guarnizioni, versione aperta e chiusa
Standard insert, sealed, open and close version/Standard-Flanschlager, abgedichtet, offene und geschlossene Version

Chrome Steel

Part	Art-close	Part	Art-open	Series	d	I	A	C	D	E	F	G	H
830	83001	831	83101	UCF 205	25	70	98	11	34	16	22	35,5	51,5
830	83002	831	83102	UCF 206	30	83	110	11	40,3	17	25	39	60,5
830	83013	831	83113	UCF 207	35	92	118	11	48	20	25	43,5	65,5
830	83004	831	83104	UCF 208/83	40	83	110	11	53	19,5	25	44,5	65,5

Inserto standard, con guarnizioni, versione aperta e chiusa
Standard insert, sealed, open and close version/Standard-Flanschlager, abgedichtet, offene und geschlossene Version

Stainless Steel

Part	Art-close	Part	Art-open	Series	d	I	A	C	D	E	F	G	H
830	83001SS	831	83101SS	UCF 205	25	70	98	11	34	16	22	35,5	51,5
830	83002SS	831	83102SS	UCF 206	30	83	110	11	40,3	17	25	39	60,5
830	83013SS	831	83113SS	UCF 207	35	92	118	11	48	20	25	43,5	65,5
830	83004SS	831	83104SS	UCF 208/83	40	83	110	11	53	19,5	25	44,5	65,5

Inserto "Long life", con guarnizioni, versione aperta e chiusa
"Long life" insert, sealed, open and close version/"Long life"-Flanschlager, abgedichtet, offene und geschlossene Version

"Long life"

Part	Art-close	Part	Art-open	Series	d	I	A	C	D	E	F	G	H
830	83001L	831	83101L	UCF 205	25	70	98	11	34	16	22	35,5	51,5
830	83002L	831	83102L	UCF 206	30	83	110	11	40,3	17	25	39	60,5
830	83013L	831	83113L	UCF 207	35	92	118	11	48	20	25	43,5	65,5
830	83004L	831	83104L	UCF 208/83	40	83	110	11	53	19,5	25	44,5	65,5

Inserto con ghiera eccentrica, guarnizioni, versione aperta e chiusa
Insert with locking collar, sealed, open and close version/Flanschlager mit Exzenter-Klemmring, abgedichtet, offene und geschlossene Version

Chrome Steel

Part	Art-close	Part	Art-open	Series	d	I	A	C	D	E	F	G	H
832	83201	833	83301	UCF 205	25	70	98	11	38,1	16	22	39,4	51,5
832	83202	833	83302	UCF 206	30	83	110	11	44,5	17	25	44,7	60,5
832	83213	833	83313	UCF 207	35	92	118	11	55,6	20	25	50,4	65,5
832	83204	833	83304	UCF 208/83	40	83	110	11	60,3	19,5	25	54,2	65,5

SOLID HOUSING

UCFA

SOLID HOUSING

Delivery: Easy Standard

Componenti

• Sede in poliammide rinforzato, con elevata resistenza meccanica e ottima resistenza contro agenti chimici corrosivi quali acqua, oli, benzina e liquidi contenenti alcool. Tutti i nostri cuscinetti possono essere utilizzati ad una temperatura compresa fra 0°C e +80°C.

• I cuscinetti sono realizzati in acciaio al cromo, disponibili anche, su richiesta, nella versione in acciaio inox.
Il cuscinetto all'interno della flangia può essere regolato di 2,5°.

• L'ingrassatore viene realizzato in ferro nichelato, o in acciaio inox nella versione con il cuscinetto in acciaio inox.

• Distanziali realizzati in ottone nichelato per rinforzare il foro di fissaggio.

• Rondella in acciaio inox.

Components

*• Housing in reinforced polyamide, with higher load capacity and good resistance to corrosive chemicals such as water, oils, petrol and alcoholic beverages.
All our bearings can be used at temperatures between 0°C and +80°C.*

• Ball bearings are made in chrome steel. They are also available, upon request , in stainless steel. Max misalignment between shaft and housing: 2.5°.

• Grease nipple are made in nickel plated steel, but they can also be made in stainless steel on the stainless steel bearing.

• Spacers from nickel plated brass to reinforce fixing holes.

• Washer stainless steel.

Komponenten

• Gehäuse gefertigt aus verstärktem Polyamid. Dies gewährleistet eine gute Widerstandsfähigkeit gegenüber mechanischen Einflüssen und eine gute Korrosionsbeständigkeit gegenüber Wasser, Ölen, Benzin, Flüssigkeiten mit Alkohol und Chemikalien. Alle unsere Gehäuse-Lagereinheiten können in einem Temperaturbereich von 0°C bis +80°C eingesetzt werden.

• Die Lagereinsätze sind aus Chrom-Stahl, auf Anfrage auch in Edelstahl erhältlich. Alle Lager gleichen einen Fluchtungsfehler von bis zu 2,5°selbstständig aus.

• Die Schmiernippel sind aus vernickeltem Stahl (aus Edelstahl wenn die Ausführung mit Edelstahl Einsatz gefragt ist).

• Alle Distanzstücke sind aus vernickeltem Messing und verstärken die Befestigungsbohrungen.

• Alle Unterlegscheiben aus Edelstahl.

Standard

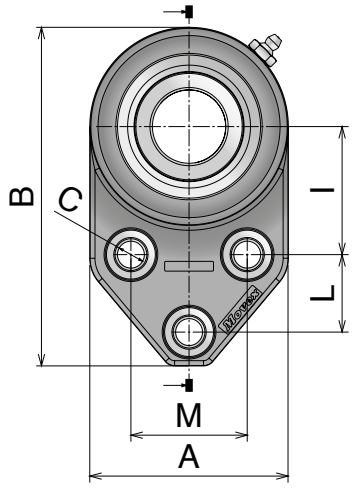

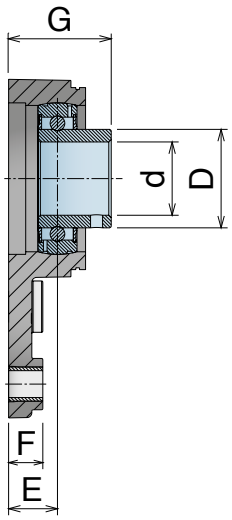

Ghiera eccentrica
Locking collar
Exzenter-Klemmring

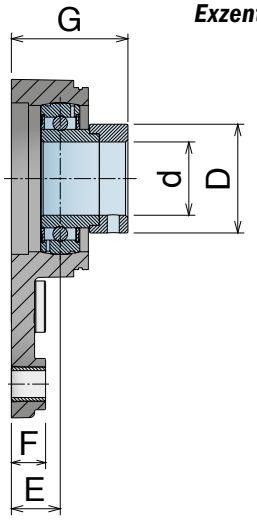

Safety Cap

Inserto standard / *Standard insert / Standard-Flanschlager*

Chrome Steel

Part	Article-Nr.	Series	d	I	A	C	D	L	M	B	E	F	G	Article-Nr.
834	**83400**	UCFA 204	20	46	68,8	11	29	28,6	41,3	124,2	16,4	14	34,4	**89001**
834	**83401**	UCFA 205	25	46	68,8	11	34	28,6	41,3	124,2	17,8	14	37,3	**89001**
834	**83402**	UCFA 206	30	52,4	81,3	11	40,3	31,7	47,6	138,6	20	14	42	**89002**

Inserto standard / *Standard insert / Standard-Flanschlager*

Stainless Steel

Part	Article-Nr.	Series	d	I	A	C	D	L	M	B	E	F	G	Article-Nr.
834	**83400SS**	UCFA 204	20	46	68,8	11	29	28,6	41,3	124,2	16,4	14	34,4	**89001**
834	**83401SS**	UCFA 205	25	46	68,8	11	34	28,6	41,3	124,2	17,8	14	37,3	**89001**
834	**83402SS**	UCFA 206	30	52,4	81,3	11	40,3	31,7	47,6	138,6	20	14	42	**89002**

Inserto con ghiera eccentrica / *Insert with locking collar / Flanschlager mit Exzenter-Klemmring*

Chrome Steel

Part	Article-Nr.	Series	d	I	A	C	D	L	M	B	E	F	G	Article-Nr.
835	**83500**	UCFA 204	20	46	68,8	11	33,3	28,6	41,3	124,2	16,4	14	40,3	**89001**
835	**83501**	UCFA 205	25	46	68,8	11	38,1	28,6	41,3	124,2	17,8	14	41,2	**89001**
835	**83502**	UCFA 206	30	52,4	81,3	11	44,5	31,7	47,6	138,6	20	14	47,7	**89002**

UCFA

SOLID HOUSING

Delivery: Easy Standard

Componenti

- Sede in poliammide rinforzato, con elevata resistenza meccanica e ottima resistenza contro agenti chimici corrosivi quali acqua, oli, benzina e liquidi contenenti alcool. Tutti i nostri cuscinetti possono essere utilizzati ad una temperatura compresa fra 0°C e +80°C.
- I cuscinetti sono realizzati in acciaio al cromo, disponibili anche, su richiesta, nella versione in acciaio inox.
  Il cuscinetto all'interno della flangia può essere regolato di 2,5°.
- L'ingrassatore viene realizzato in ferro nichelato, o in acciaio inox nella versione con il cuscinetto in acciaio inox.
- Distanziali realizzati in ottone nichelato per rinforzare il foro di fissaggio.
- Rondella in acciaio inox.
- Coperchio di sicurezza in PP.
- Anello di tenuta in gomma NBR.
- O-ring in NBR rubber.

Components

- *Housing in reinforced polyamide, with higher load capacity and good resistance to corrosive chemicals such as water, oils, petrol and alcoholic beverages.*
  All our bearings can be used at temperatures between 0°C and +80°C.
- *Ball bearings are made in chrome steel. They are also available, upon request, in stainless steel. Max misalignment between shaft and housing: 2.5°.*
- *Grease nipple are made in nickel plated stell, but they can also be made in stainless steel on the stainless steel bearing.*
- *Spacers from nickel plated brass to reinforce fixing holes.*
- *Washer stainless steel.*
- *Clip-on safety cap in PP.*
- *Rotary shaft seal ring in NBR rubber.*
- *O-ring in NBR rubber.*

Komponenten

- *Gehäuse gefertigt aus verstärktem Polyamid Dies gewährleistet eine gute Widerstandsfähigkeit gegenüber mechanischen Einflüssen und eine gute Korrosionsbeständigkeit gegenüber Wasser, Ölen, Benzin, Flüssigkeiten mit Alkohol und Chemikalien. Alle unsere Gehäuse-Lagereinheiten können in einem Temperaturbereich von 0°C bis +80°C eingesetzt werden.*
- *Die Lagereinsätze sind aus Chrom-Stahl, auf Anfrage auch in Edelstahl erhältlich. Alle Lager gleichen eine Fluchtungsfehler von bis zu 2,5° selbstständig aus.*
- *Die Schmiernippel sind aus vernickeltem Stahl (aus Edelstahl wenn die Ausführung mit Edelstahl Einsatz gefragt ist).*
- *Alle Distanzstücke sind aus vernickeltem Messing und verstärkten die Befestigungsbohrungen.*
- *Alle Unterlegscheiben aus Edelstahl.*
- *Schutzkappe aus PP*
- *Dichtringe aus NBR-Gummi*
- *O-Ringe aus NBR-Gummi*

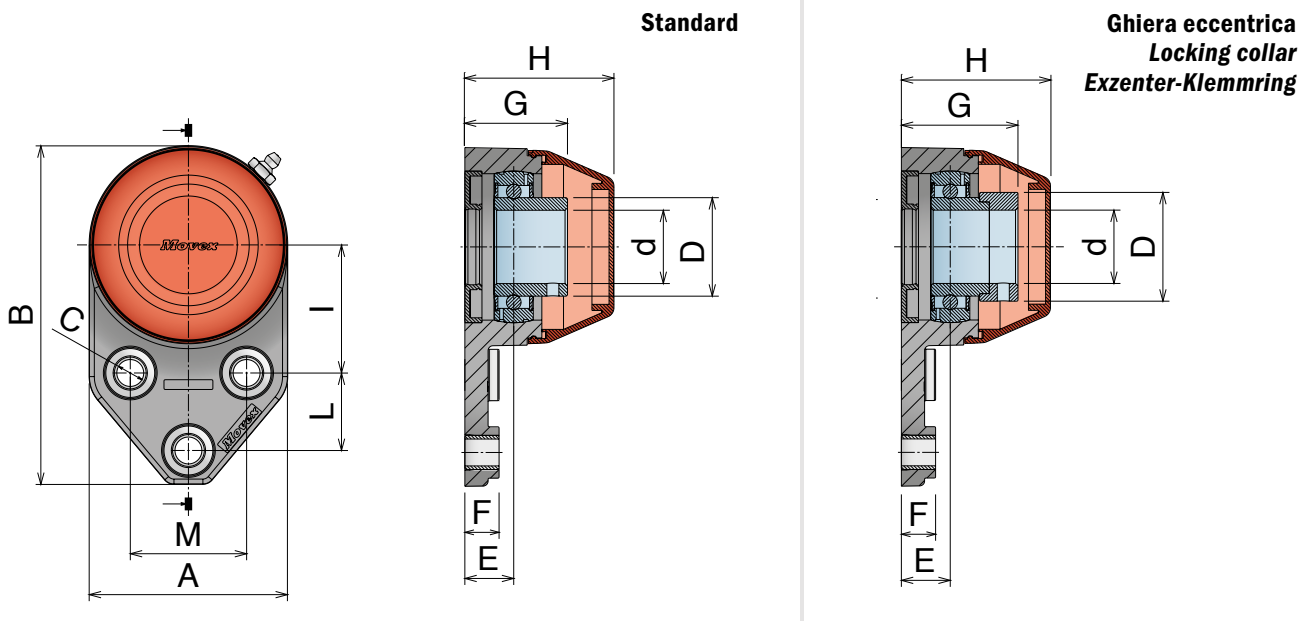

Inserto standard, con guarnizioni, versione aperta e chiusa
Standard insert, sealed, open and close version/Standard-Flanschlager, abgedichtet, offene und geschlossene Version

Chrome Steel

Part	Art-close	Part	Art-open	Series	d	I	A	C	D	L	M	B	E	F	G	H
836	83600	837	83700	UCF 204	20	46	68,8	11	29	28,6	41,3	124,2	16,4	14	34,4	51,8
836	83601	837	83701	UCF 205	25	46	68,8	11	34	28,6	41,3	124,2	17,8	14	37,3	51,8
836	83602	837	83702	UCF 206	30	52,4	81,3	11	40,3	31,7	47,6	138,6	20	14	42	61

Inserto standard, con guarnizioni, versione aperta e chiusa
Standard insert, sealed, open and close version/Standard-Flanschlager, abgedichtet, offene und geschlossene Version

Stainless Steel

Part	Art-close	Part	Art-open	Series	d	I	A	C	D	L	M	B	E	F	G	H
836	83600SS	837	83700SS	UCF 204	20	46	68,8	11	29	28,6	41,3	124,2	16,4	14	34,4	51,8
836	83601SS	837	83701SS	UCF 205	25	46	68,8	11	34	28,6	41,3	124,2	17,8	14	37,3	51,8
836	83602SS	837	83702SS	UCF 206	30	52,4	81,3	11	40,3	31,7	47,6	138,6	20	14	42	61

Inserto "Long life", con guarnizioni, versione aperta e chiusa
"Long life" insert, sealed, open and close version/"Long life"-Flanschlager, abgedichtet, offene und geschlossene Version

"Long life"

Part	Art-close	Part	Art-open	Series	d	I	A	C	D	L	M	B	E	F	G	H
836	83600L	837	83700L	UCF 204	20	46	68,8	11	29	28,6	41,3	124,2	16,4	14	34,4	51,8
836	83601L	837	83701L	UCF 205	25	46	68,8	11	34	28,6	41,3	124,2	17,8	14	37,3	51,8
836	83602L	837	83702L	UCF 206	30	52,4	81,3	11	40,3	31,7	47,6	138,6	20	14	42	61

Inserto con ghiera eccentrica, guarnizioni, versione aperta e chiusa
Insert with locking collar, sealed, open and close version/Flanschlager mit Exzenter-Klemmring, abgedichtet, offene und geschlossene Version

Chrome Steel

Part	Art-close	Part	Art-open	Series	d	I	A	C	D	L	M	B	E	F	G	H
838	83800	839	83900	UCF 204	20	46	68,8	11	33,3	28,6	41,3	124,2	16,4	14	40,3	51,8
838	83801	839	83901	UCF 205	25	46	68,8	11	38,1	28,6	41,3	124,2	17,8	14	41,2	51,8
838	83802	839	83902	UCF 206	30	52,4	81,3	11	44,5	31,7	47,6	138,6	20	14	47,7	61

UCFL-H/UCF-H

COVER IN STAINLESS STEEL

Delivery: Easy Standard

Componenti

- Sede in poliammide rinforzato, con elevata resistenza meccanica e ottima resistenza contro agenti chimici corrosivi quali acqua, oli, benzina e liquidi contenenti alcool. Tutti i nostri cuscinetti possono essere utilizzati ad una temperatura compresa fra 0°C e +80°C.
- I cuscinetti sono realizzati in acciaio al cromo, disponibili anche, su richiesta, nella versione in acciaio inox.
  Il cuscinetto all'interno della flangia può essere regolato di 2,5°.
- L'ingrassatore viene realizzato in ferro nichelato, o in acciaio inox nella versione con il cuscinetto in acciaio inox.
- Distanziali realizzati in ottone nichelato per rinforzare il foro di fissaggio.
- Rondella in acciaio inox.
- Coperchio di sicurezza in PP.
- **"Cover"** in acciaio inox.

Components

- *Housing in reinforced polyamide, with higher load capacity and good resistance to corrosive chemicals such as water, oils, petrol and alcoholic beverages.*
  All our bearings can be used at temperatures between 0°C and +80°C.
- *Ball bearings are made in chrome steel. They are also available, upon request, in stainless steel. Max misalignment between shaft and housing: 2.5°.*
- *Grease nipple are made in nickel plated steel, but they can also be made in stainless steel on the stainless steel bearing.*
- *Spacers from nickel plated brass to reinforce fixing holes.*
- *Washer stainless steel.*
- ***"Cover"** in stainless steel*

Komponenten

- *Gehäuse gefertigt aus verstärktem Polyamid Dies gewährleistet eine gute Widerstandsfähigkeit gegenüber mechanischen Einflüssen und eine gute Korrosionsbeständigkeit gegenüber Wasser, Ölen, Benzin, Flüssigkeiten mit Alkohol und Chemikalien. Alle unsere Gehäuse-Lagereinheiten können in einem Temperaturbereich von 0°C bis +80°C eingesetzt werden.*
- *Die Lagereinsätze sind aus Chrom-Stahl, auf Anfrage auch in Edelstahl erhältlich. Alle Lager gleichen eine Fluchtungsfehler von bis zu 2,5° selbstständig aus.*
- *Die Schmiernippel sind aus vernickeltem Stahl (aus Edelstahl wenn die Ausführung mit Edelstahl Einsatz gefragt ist).*
- *Alle Distanzstücke sind aus vernickeltem Messing und verstärkten die Befestigungsbohrungen.*
- *Alle Unterlegscheiben aus Edelstahl.*
- *Gehäuseabdeckung aus Edelstahl.*

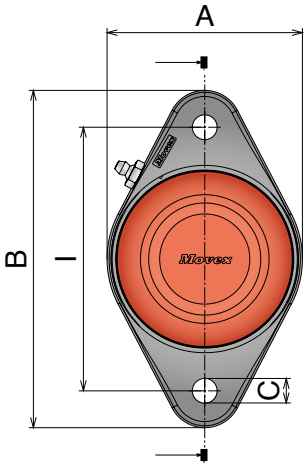

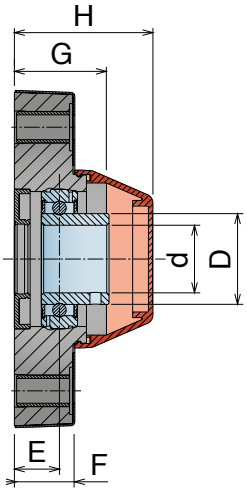

Standard

Ghiera eccentrica
Locking collar
Exzenter-Klemmring

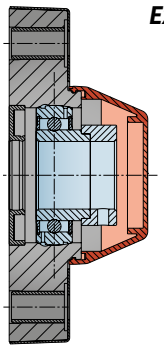

SOLID HOUSING

Inserto standard, con guarnizioni, versione aperta e chiusa / *Standard insert, sealed, open and close version / Standard-Flanschlager, abgedichtet, offene und geschlossene Version*

	Part	Art-close	Part	Art-open	Series	d	I	A	B	C	D	E	F	G	H
Chrome Steel	824	82412H	825	82512H	UCFL-H 206	30	117	86,7	149,7	11	40,3	20	26,85	42	61,5
	824	82403H	825	82503H	UCFL-H 207/117	35	117	94,7	149,7	11	48	19,5	26	43	66,5
	824	82404H	825	82504H	UCFL-H 208/117	40	117	94,7	149,7	11	53	19	26,85	44	67

Inserto "long life", con guarnizioni, versione aperta e chiusa / *"Long life" insert, sealed, open and close version / "Long Life"-Flanschlager, abgedichtet, offene und geschlossene Version*

	Part	Art-close	Part	Art-open	Series	d	I	A	B	C	D	E	F	G	H
"Long life"	824	82412LH	825	82512LH	UCFL-H 206	30	117	86,7	149,7	11	40,3	20	26,85	42	61,5
	824	82403LH	825	82503LH	UCFL-H 207/117	35	117	94,7	149,7	11	48	19,5	26	43	66,5
	824	82404LH	825	82504LH	UCFL-H 208/117	40	117	94,7	149,7	11	53	19	26,85	44	67

Inserto con ghiera eccentrica, guarnizioni, versione aperta e chiusa / *Insert with locking collar, sealed, open and close version / Flanschlager mit Exzenter-Klemmring, abgedichtet, offene und geschlossene Version*

	Part	Art-close	Part	Art-open	Series	d	I	A	B	C	D	E	F	G	H
Chrome Steel	826	82612H	827	82712H	UCFL-H 206	30	117	86,7	149,7	11	44,5	20	26,85	47,7	61,5
	826	82603H	827	82703H	UCFL-H 207/117	35	117	94,7	149,7	11	55,6	19,5	26	49,9	66,5
	826	82604H	827	82704H	UCFL-H 208/117	40	117	94,7	149,7	11	60,3	19	26,85	54	67

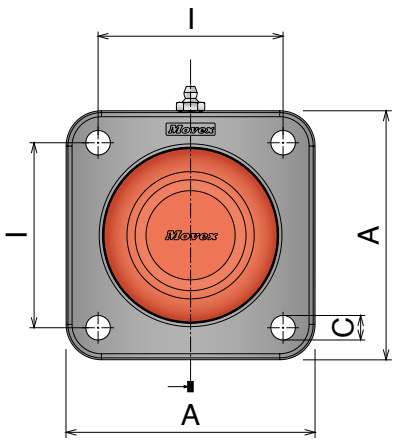

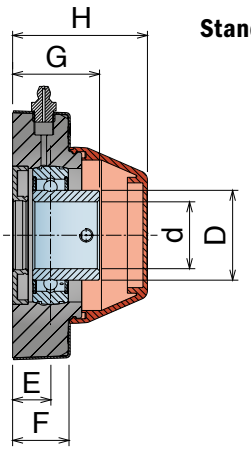

Standard

Ghiera eccentrica
Locking collar
Exzenter-Klemmring

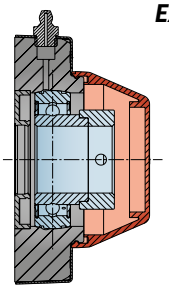

SOLID HOUSING

Inserto standard, con guarnizioni, versione aperta e chiusa / *Standard insert, sealed, open and close version / Standard-Flanschlager, abgedichtet, offene und geschlossene Version*

	Part	Art-close	Part	Art-open	Series	d	I	A	C	D	E	F	G	H
Chrome Steel	830	83002H	831	83102H	UCF-H 206	30	83	111,7	11	40,3	17	25	39	60,5
	830	83004H	831	83104H	UCF-H 208/83	40	83	111,7	11	53	19,5	25	44,5	65,5

Inserto "long life", con guarnizioni, versione aperta e chiusa / *"Long life" insert, sealed, open and close version / "Long Life"-Flanschlager, abgedichtet, offene und geschlossene Version*

	Part	Art-close	Part	Art-open	Series	d	I	A	C	D	E	F	G	H
"Long life"	830	83002LH	831	83102LH	UCF-H 206	30	83	111,7	11	40,3	17	25	39	60,5
	830	83004LH	831	83104LH	UCF-H 208/83	40	83	111,7	11	53	19,5	25	44,5	65,5

Inserto con ghiera eccentrica, guarnizioni, versione aperta e chiusa / *Insert with locking collar, sealed, open and close version / Flanschlager mit Exzenter-Klemmring, abgedichtet, offene und geschlossene Version*

	Part	Art-close	Part	Art-open	Series	d	I	A	C	D	E	F	G	H
Chrome Steel	832	83202H	833	83302H	UCF-H 206	30	83	111,7	11	44,5	17	25	47,7	60,5
	832	83204H	833	83304H	UCF-H 208/83	40	83	111,7	11	60,3	19,5	25	54,2	65,5

CL/CS

EXTERNAL HOUSING IN STAINLESS STEEL *RANGE EXTENSION*

Delivery: Easy Standard

Componenti

• Sede in poliammide rinforzato, con elevata resistenza meccanica e ottima resistenza contro agenti chimici corrosivi quali acqua, oli, benzina e liquidi contenenti alcool. Tutti i nostri cuscinetti possono essere utilizzati ad una temperatura compresa fra 0°C e +80°C.

• I cuscinetti sono realizzati in acciaio al cromo, disponibili anche, su richiesta, nella versione in acciaio inox.
Il cuscinetto all'interno della flangia può essere regolato di 2,5°.

• L'ingrassatore viene realizzato in ferro nichelato, o in acciaio inox nella versione con il cuscinetto in acciaio inox.

• Distanziali realizzati in ottone nichelato per rinforzare il foro di fissaggio.

• Rondella in acciaio inox.

• Coperchio di sicurezza in PP.

• **"Cover"** in acciaio inox.

Components

• *Housing in reinforced polyamide, with higher load capacity and good resistance to corrosive chemicals such as water, oils, petrol and alcoholic beverages.*
All our bearings can be used at temperatures between 0°C and +80°C.

• *Ball bearings are made in chrome steel. They are also available, upon request, in stainless steel. Max misalignment between shaft and housing: 2.5°.*

• *Grease nipple are made in nickel plated stell, but they can also be made in stainless steel on the stainless steel bearing.*

• *Spacers from nickel plated brass to reinforce fixing holes.*

• *Washer stainless steel.*

• ***"Cover"** in stainless steel*

Komponenten

• *Gehäuse gefertigt aus verstärktem Polyamid Dies gewährleistet eine gute Widerstandsfähigkeit gegenüber mechanischen Einflüssen und eine gute Korrosionsbeständigkeit gegenüber Wasser, Ölen, Benzin, Flüssigkeiten mit Alkohol und Chemikalien. Alle unsere Gehäuse-Lagereinheiten können in einem Temperaturbereich von 0°C bis +80°C eingesetzt werden.*

• *Die Lagereinsätze sind aus Chrom-Stahl, auf Anfrage auch in Edelstahl erhältlich. Alle Lager gleichen eine Fluchtungsfehler von bis zu 2,5° selbstständig aus.*

• *Die Schmiernippel sind aus vernickeltem Stahl (aus Edelstahl wenn die Ausführung mit Edelstahl Einsatz gefragt ist).*

• *Alle Distanzstücke sind aus vernickeltem Messing und verstärkten die Befestigungsbohrungen.*

• *Alle Unterlegscheiben aus Edelstahl.*

• ***"Cover"** aus Edelstahl.*

Standard

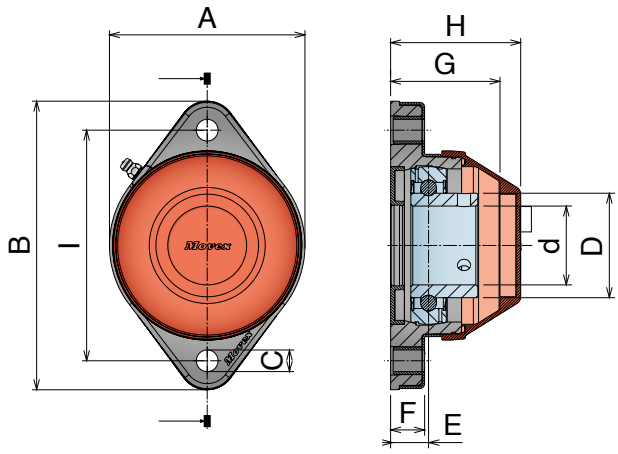

Ghiera eccentrica
Locking collar
Exzenter-Klemmring

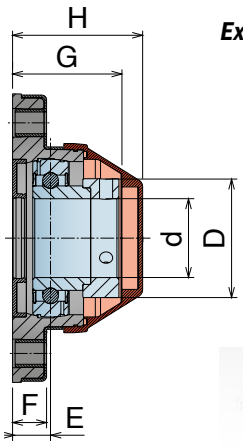

SOLID HOUSING

Inserto standard, con guarnizioni, versione aperta e chiusa
Standard insert, sealed, open and close version/Standard-Flanschlager, abgedichtet, offene und geschlossene Version

Chrome Steel

Part	Art-close	Part	Art-open	Series	d	I	A	B	C	D	E	F	G	H
845	84502	846	84602	CL 206	30	117	99	146,5	11	40	18,5	16,5	40	69
845	84503	846	84603	CL 207	35	117	99	146,5	11	48	18,5	16,5	41,5	69
845	84504	846	84604	CL 208	40	117	99	146,5	11	53	18,5	16,5	43	69

Inserto standard, con guarnizioni, versione aperta e chiusa
Standard insert, sealed, open and close version/Standard-Flanschlager, abgedichtet, offene und geschlossene Version

Stainless Steel

Part	Art-close	Part	Art-open	Series	d	I	A	B	C	D	E	F	G	H
845	84502SS	846	84602SS	CL 206	30	117	99	146,5	11	40	18,5	16,5	40	69
845	84503SS	846	84603SS	CL 207	35	117	99	146,5	11	48	18,5	16,5	41,5	69
845	84504SS	846	84604SS	CL 208	40	117	99	146,5	11	53	18,5	16,5	43	69

Inserto "Long life", con guarnizioni, versione aperta e chiusa
"Long life" insert, sealed, open and close version/"Long life"-Flanschlager, abgedichtet, offene und geschlossene Version

"Long life"

Part	Art-close	Part	Art-open	Series	d	I	A	B	C	D	E	F	G	H
845	84502L	846	84602L	CL 206	30	117	99	146,5	11	40	18,5	16,5	40	69
845	84503L	846	84603L	CL 207	35	117	99	146,5	11	48	18,5	16,5	41,5	69
845	84504L	846	84604L	CL 208	40	117	99	146,5	11	53	18,5	16,5	43	69

Inserto con ghiera eccentrica, guarnizioni, versione aperta e chiusa
Insert with locking collar, sealed, open and close version/Flanschlager mit Exzenter-Klemmring, abgedichtet, offene und geschlossene Version

Chrome Steel

Part	Art-close	Part	Art-open	Series	d	I	A	B	C	D	E	F	G	H
847	84702	848	84802	CL 206	30	117	99	146,5	11	45	18,5	16,5	46	69
847	84703	848	84803	CL 207	35	117	99	146,5	11	56	18,5	16,5	49	69
847	84704	848	84804	CL 208	40	117	99	146,5	11	60,3	18,5	16,5	53	69

Standard

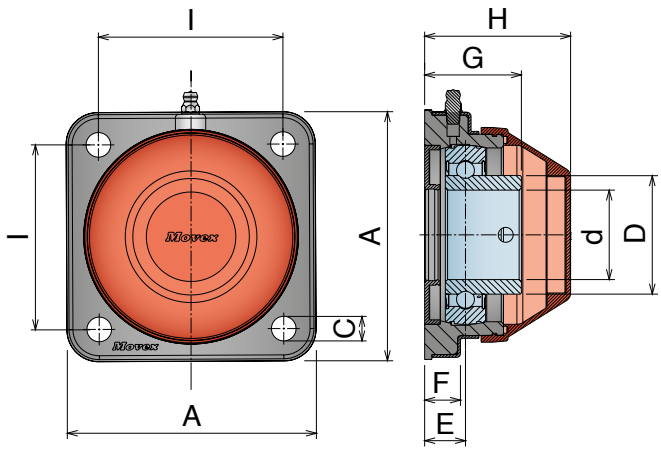

Ghiera eccentrica
Locking collar
Exzenter-Klemmring

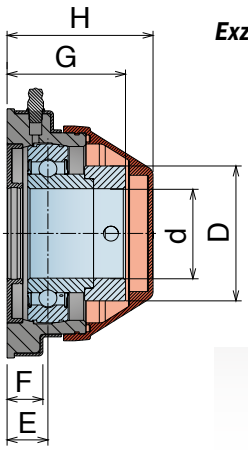

SOLID HOUSING

Inserto standard, con guarnizioni, versione aperta e chiusa
Standard insert, sealed, open and close version/Standard-Flanschlager, abgedichtet, offene und geschlossene Version

	Part	Art-close	Part	Art-open	Series	d	I	A	C	D	E	F	G	H
Chrome Steel	849	84902	850	85002	CS 206	30	82,5	111	11	40	18,5	16,5	40	69
	849	84903	850	85003	CS 207	35	82,5	111	11	48	18,5	16,5	41,5	69
	849	84904	850	85004	CS 208	40	82,5	111	11	53	18,5	16,5	43	69

Inserto standard, con guarnizioni, versione aperta e chiusa
Standard insert, sealed, open and close version/Standard-Flanschlager, abgedichtet, offene und geschlossene Version

	Part	Art-close	Part	Art-open	Series	d	I	A	C	D	E	F	G	H
Stainless Steel	849	84902SS	850	85002SS	CS 206	30	82,5	111	11	40	18,5	16,5	40	69
	849	84903SS	850	85003SS	CS 207	35	82,5	111	11	48	18,5	16,5	41,5	69
	849	84904SS	850	85004SS	CS 208	40	82,5	111	11	53	18,5	16,5	43	69

Inserto "Long life", con guarnizioni, versione aperta e chiusa
"Long life" insert, sealed, open and close version/"Long life"-Flanschlager, abgedichtet, offene und geschlossene Version

	Part	Art-close	Part	Art-open	Series	d	I	A	C	D	E	F	G	H
"Long life"	849	84902L	850	85002L	CS 206	30	82,5	111	11	40	18,5	16,5	40	69
	849	84903L	850	85003L	CS 207	35	82,5	111	11	48	18,5	16,5	41,5	69
	849	84904L	850	85004L	CS 208	40	82,5	111	11	53	18,5	16,5	43	69

Inserto con ghiera eccentrica, guarnizioni, versione aperta e chiusa
Insert with locking collar, sealed, open and close version/Flanschlager mit Exzenter-Klemmring, abgedichtet, offene und geschlossene Version

	Part	Art-close	Part	Art-open	Series	d	I	A	C	D	E	F	G	H
Chrome Steel	851	85102	852	85202	CS 206	30	82,5	111	11	45	18,5	16,5	46	69
	851	85103	852	85203	CS 207	35	82,5	111	11	56	18,5	16,5	49	69
	851	85104	852	85204	CS 208	40	82,5	111	11	60,3	18,5	16,5	53	69

Oadby Core product range
Oadby Available from stock in Leicester
Easy Available from stock in Italy
Standard Produced to order in Italy
Movex

SUCF/SUCFL/SUCFK

Delivery: Easy Standard

Cuscinetti Acciaio Inox

- Sede in Acciaio Inox, ottimale per l'utilizzo nei processi alimentari e farmaceutici.
- I cuscinetti sono realizzati in Acciaio inox, è possibile regolarli di 2.5° all'interno della flangia.
- Ingrassatore realizzato in Acciaio inox.
- Rondella per ingrassatore realizzata in Polietilene.

Bearing units in Stainless steel

- *Housing in stainless steel, best choice for processes in food or pharmaceutical industries.*
- *Ball bearings are made in stainless steel, they allow a misalignment between shaft and housing of max. 2.5°.*
- *Grease nipple made in stainless steel.*
- *Washer for grease nipple in PE.*

Flanschlager aus Edelstahl

- *Lagergehäuse aus Edelstahl, optimal für den Einsatz in der Lebensmittel- oder Pharmaindustrie.*
- *Lagereinsatz aus Edelstahl, alle Lager gleichen einen Fluchtungsfehler von bis zu 2,5° selbständig aus.*
- *Schmiernippel aus Edelstahl.*
- *Unterlegscheibe für Schmiernippel aus PE.*

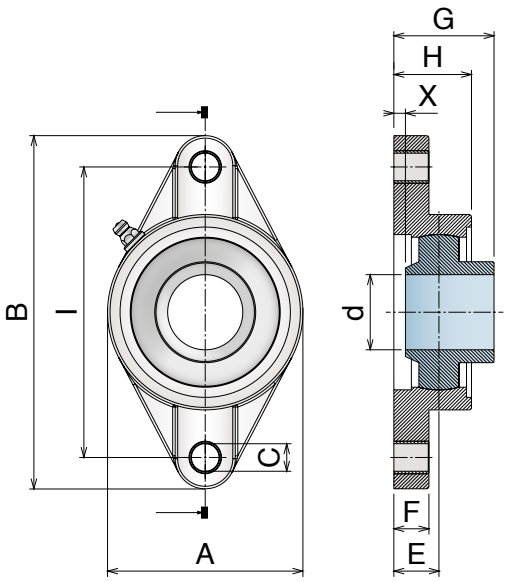

SUCFL Inserto standard
Standard insert / Standard-Flanschlager

Part	Art.-Nr.	Series	d	I	A	B	C	E	F	G	H	X
817	81700	SUCFL 204	20	90	60	113	12	15	11	33,3	25,5	2,3
817	81701	SUCFL 205	25	99	68	130	16	16	14,5	35,8	27	1,7
817	81702	SUCFL 206	30	117	80	148	16	18	14,5	40,2	31	2,1
817	81703	SUCFL 207	35	130	90	161	16	19	14,5	44,4	34	1,5
817	81704	SUCFL 208	40	144	100	175	16	21	15	51,2	36	2

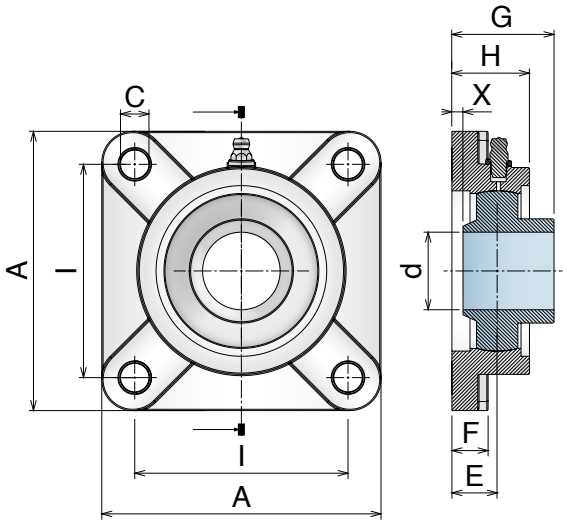

SUCF Inserto standard
Standard insert / Standard-Flanschlager

Part	Art.-Nr.	Series	d	I	A	C	E	F	G	H	X
819	81900	SUCF 204	20	64	86	12	15	12	33,3	25,5	2,3
819	81901	SUCF 205	25	70	95	12	16	14	35,8	27	1,7
819	81902	SUCF 206	30	83	108	12	18	14	40,2	31	2,1
819	81903	SUCF 207	35	92	117	14	19	15,5	44,4	34	1,5
819	81904	SUCF 208	40	102	130	16	21	15,5	51,2	36	2

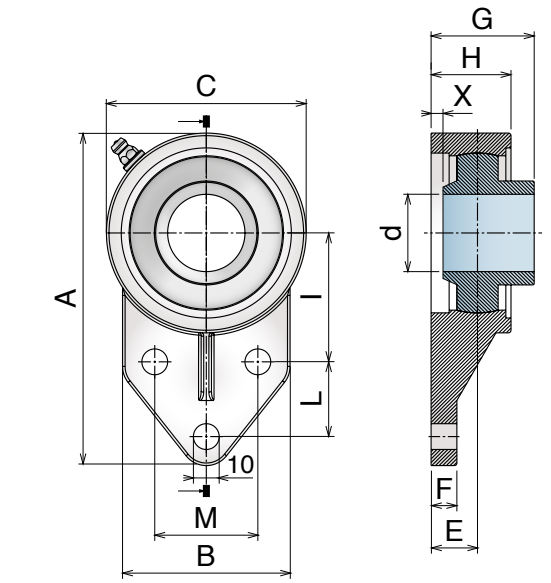

SUCFK Inserto standard
Standard insert / Standard-Flanschlager

Part	Art.-Nr.	Series	d	A	I	L	M	B	C	E	F	G	H	X
821	82100	SUCFK 204	20	110	42	27	32	52	62	15	13	33,3	25,5	2,3
821	82101	SUCFK 205	25	116	45	27	34	56	68	16	13	35,7	27	1,7
821	82102	SUCFK 206	30	130	50	29	40	65	78	18	13	40,2	31	2,1
821	82103	SUCFK 207	35	144	55	32	46	70	90	19	15	44,4	34	1,5
821	82104	SUCFK 208	40	164	60	41	50	78	100	21	16	51,2	36	2

Oadby Core product range

Oadby Available from stock in Leicester | Easy Available from stock in Italy | Standard Produced to order in Italy

Movex

HYGIENIC Series

Delivery: Easy Standard

Cuscinetti - Bianchi/blu

- Sede in Poliammide.
- I cuscinetti sono realizzati in Acciaio Inox, è possibile regolarli di 2.5° all'interno della flangia.
- L'ingrassatore viene realizzato in Acciaio Inox.
- Distanziali realizzati in Acciaio Inox.
- Rondella per ingrassatore realizzata in Polietilene.

Bearing units – White/blue

- *Housing in reinforced Polyamide.*
- *Ball bearings are made in stainless steel, they allow a misalignment between shaft and housing of max. 2.5°.*
- *Grease nipple made in stainless steel.*
- *Spacers in stainless steel to reinforce fixing holes.*
- *Washer for grease nipple in PE.*

Flanschlager – Weiss/blauen

- *Lagergehäuse gefertigt aus verstärktem Polyamid.*
- *Lagereinsatz aus Edelstahl, alle Lager gleichen einen Fluchtungsfehler von bis zu 2,5° selbständig aus.*
- *Schmiernippel aus Edelstahl.*
- *Distanzstücke aus Edelstahl und verstärken die Befestigungsbohrungen.*
- *Unterlegscheibe für Schmiernippel aus Edelstahl.*

NEW FL *HYGIENIC*

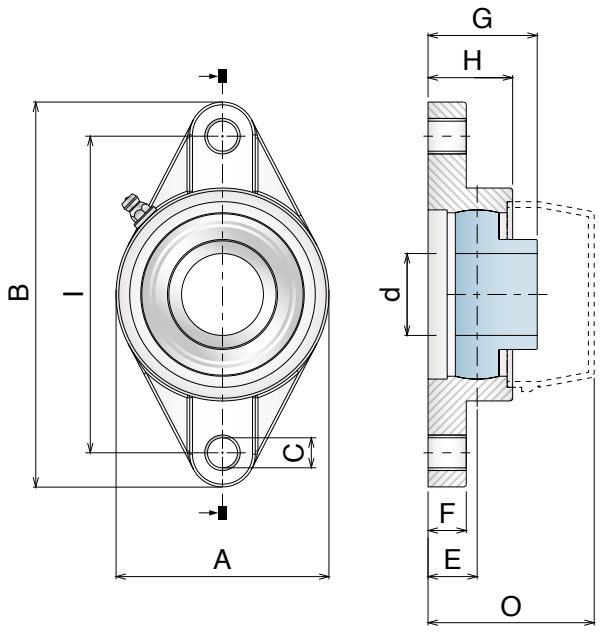

Main features:
- Housing in reinforced Polyamide.
- Ball bearings in stainless steel,

they allow a misalignment between shaft and housing of max 2.5°.
- Stainless steel mounting hole spacers to reinforce fixing holes.
- Stainless steel grease nipple.

FL Bearing support - Stainless steel insert

Color and Article-Nr.		Series	d	I	A	B	C	E	F	G	H	O
○ 81300	● 81300B	FL 204	20	90	64	113	11	15,4	11,4	33,7	23,5	46,5
○ 81301	● 81301B	FL 205	25	99	70	131	11	17	13,5	36,7	29,5	51
○ 81305	● 81305B	FL 206/90,5	30	90,5	84	112,5	11	11,5	20,5	33,5	23,3	50
○ 81302	● 81302B	FL 206	30	117	80	148	11	19	13,3	41,2	30,9	58
○ 81303	● 81303B	FL 207	35	130	90	164	13	18	16,1	43,7	33	61
○ 81306	● 81306B	FL 208/119	40	119	99	150	14	13,5	24	38,5	26,8	60,5
○ 81304	● 81304B	FL 208	40	144	100	176	14	21,5	20	51,7	37,5	71

Cap needs to be order separately | More accessories available at Pag 556

NEW F *HYGIENIC*

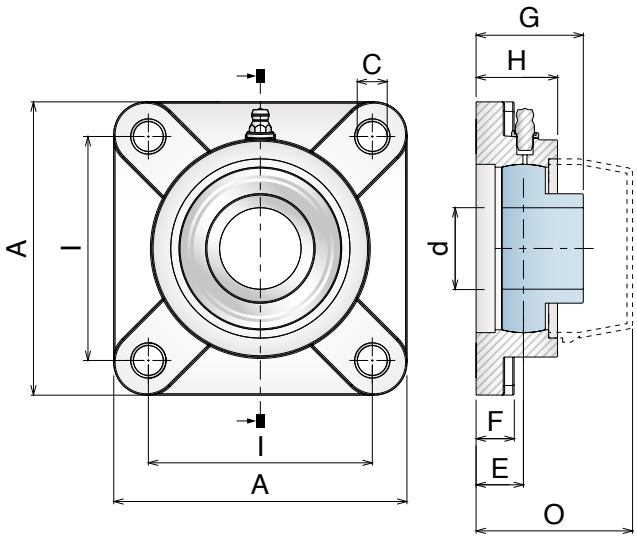

Main features:
- Housing in reinforced Polyamide.
- Stainless steel ball bearings to allow a misalignment between shaft and housing of max 2.5°.
- Stainless steel mounting hole spacers to reinforce fixing holes.
- Stainless steel grease nipple.

F Bearing support - Stainless steel insert

Color and Article-Nr.		Series	d	I	A	C	E	F	G	H	O
○ 81400	● 81400B	F 204	20	63,5	86	11	18	13,4	34,8	25,3	48,5
○ 81401	● 81401B	F 205	25	70	95	11	17	14	35,8	28,5	51
○ 81402	● 81402B	F 206	30	83	107	11	19,2	14,3	40,8	31,5	59
○ 81403	● 81403B	F 207	35	92	118	13	21,5	15,5	42,8	34,4	62,5
○ 81404	● 81404B	F 208	40	102	130	14	23	17	46,2	33,4	71

Cap needs to be order separately | More accessories available at Pag 556

NEW FB *HYGIENIC*

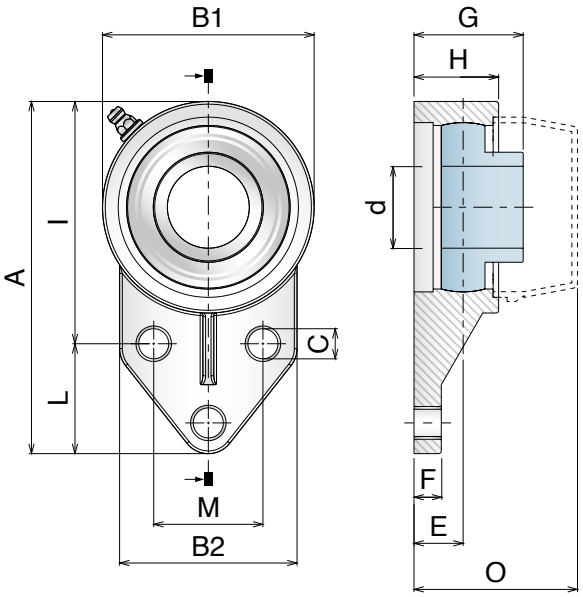

Main features:
- Housing in reinforced Polyamide.
- Ball bearings in stainless steel, they allow a misalignment between shaft and housing of max 2.5°.
- Stainless steel mounting hole spacers to reinforce fixing holes.
- Stainless steel grease nipple.

FB Bearing support - Stainless steel insert

Color and Article-Nr.		Series	d	A	I	L	M	B1	B2	E	F	G	H	O
○ 81500	● 81500B	FB 204	20	108,5	42,9	22,2	38,1	62	62	15,4	12	33,2	23,4	46,5
○ 81501	● 81501B	FB 205	25	120,6	46	28,6	41,3	68	64	21	12	41	34,3	55
○ 81502	● 81502B	FB 206	30	140	52,4	31,8	47,6	83	75	19	14	41	32	59
○ 81503	● 81503B	FB 207	35	157	60,3	31,8	50,8	95	89	21,4	16	43,9	37	63,5
○ 81504	● 81504B	FB 208	40	164	60,3	41,3	50	100	78	22	18	44,5	32	68,5

Cap needs to be order separately | More accessories available at Pag 556

NEW UCP *HYGIENIC*

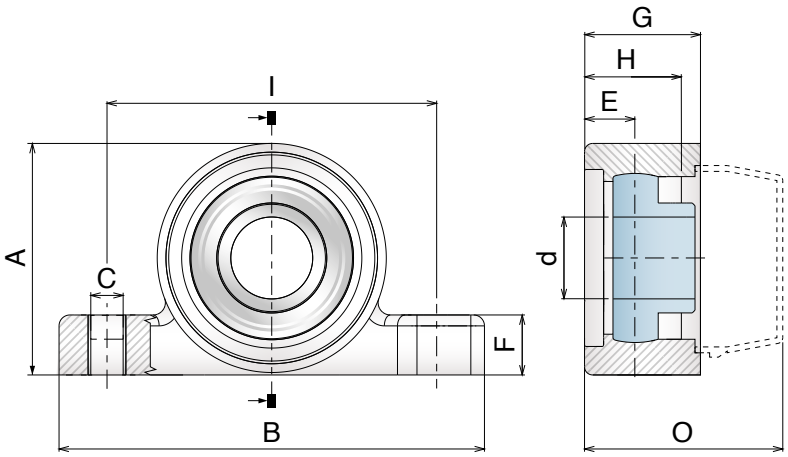

Main features:

- Housing in reinforced Polyamide.
- Stainless steel ball bearings to allow a misalignment between shaft and housing of max 2.5°.
- Stainless steel mounting hole spacers to reinforce fixing holes.
- Stainless steel grease nipple.

UCP Bearing support - Stainless steel insert

Color and Article-Nr.		Series	d	I	A	B	C	E	F	G	H	O
81800	81800B	UCP 204	20	95	65,5	127	14 (11)	15	16	38	23	50
81801	81801B	UCP 205	25	105	71,5	140	14 (11)	16	15	38	29	54,5
81802	81802B	UCP 206	30	119	83,5	163	18 (14)	17,5	18	46	30,5	65
81803	81803B	UCP 207	35	127	94,5	168	18 (14)	17,5	18	48	31,5	67
81804	81804B	UCP 208	40	137	99	184	18 (14)	15,5	20	54	30	76

Cap needs to be order separately | More accessories available at Pag 556

NEW UCT *HYGIENIC*

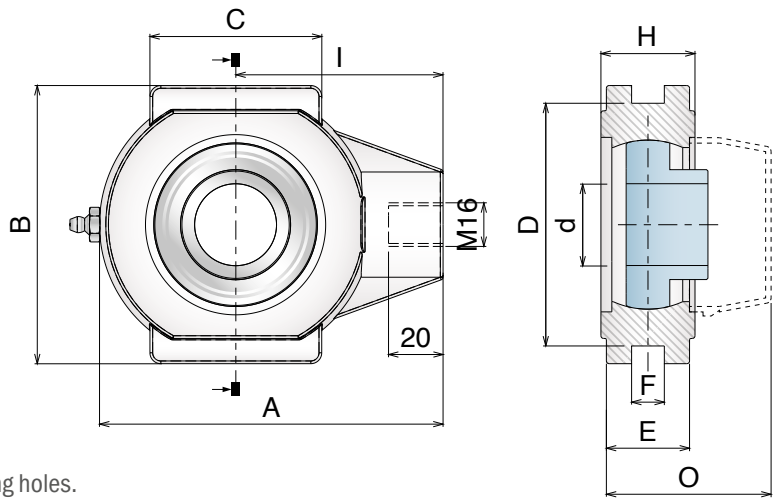

Main features:

- Housing in reinforced Polyamide.
- Ball bearings in stainless steel, they allow a misalignment between shaft and housing of max 2.5°.
- Stainless steel mounting hole spacers to reinforce fixing holes.
- Stainless steel grease nipple.

UCT Bearing support - Stainless steel insert

Color and Article-Nr.		Series	d	I	A	B	C	D	E	F	H	O
86000	86000B	UCT 204	20	64	99	88	47	76	23,5	12	27,5	46,5
86001	86001B	UCT 205	25	64	99	88	47	76	23,5	12	27,5	46,5
86002	86002B	UCT 206	30	76	125	102	63	90	30,5	12	34,5	60
86003	86003B	UCT 207	35	76	125	102	63	90	30,5	12	34,5	62
86004	86004B	UCT 208	40	85	140	114	80	102	33,5	16	38,5	70

Cap needs to be order separately | More accessories available at Pag 556

NEW 898
Coperchio di sicurezza aperto
Open clip-on safety cap / Offene schutzkappe

Delivery: Easy Standard

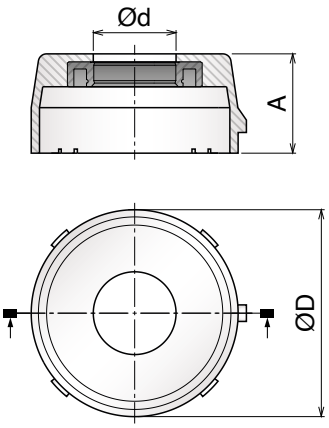

Color/Article-Nr.	ØD	Ød	A
89851	50	20	23
89851B	50	20	23
89852	55	25	25
89852B	55	25	25
89853	64	30	30
89853B	64	30	30
89854	73	35	32
89854B	73	35	32
89855	84	40	38
89855B	84	40	38

NEW 898
Coperchio di sicurezza chiuso
Closed clip-on safety cap / Geschlossene schutzkappe

Delivery: Easy Standard

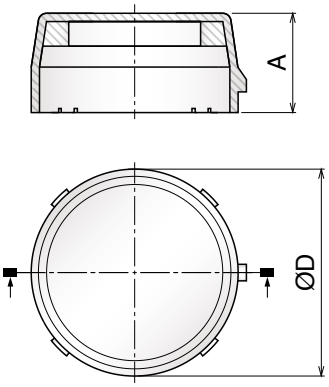

Color/Article-Nr.	ØD	A
89801	50	23
89801B	50	23
89802	55	25
89802B	55	25
89803	64	30
89803B	64	30
89804	73	32
89804B	73	32
89805	84	38
89805B	84	38

NEW 897
Anello di tenuta
Sealing ring / Dichtringe

Delivery: Easy Standard

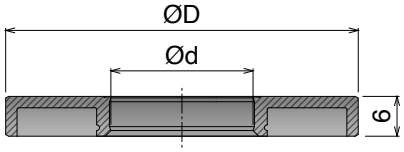

Color/Article-Nr.	ØD	Ød
89701	52	20
89701B	52	20
89702	62	25
89702B	62	25
89703	72	30
89703B	72	30
89704	82	35
89704B	82	35
89705	88	40
89705B	88	40

557

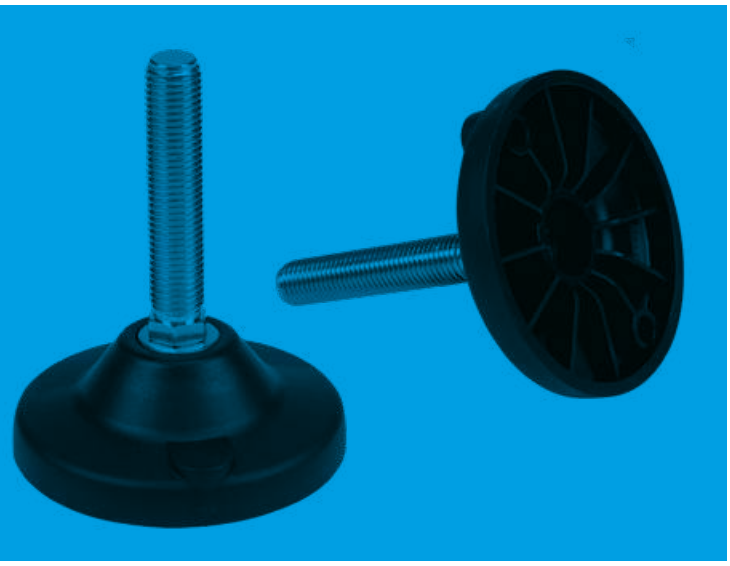

Leveling feet

Basic Series
Ø40-Ø50-Ø60-Ø80-Ø100

Pag 558

Articulated Series
Ø110 Ø123

Pag 562

Muscle Series
Ø123

Pag 566

P400R Series
Ø80-Ø100-Ø120

Pag 569

STEEL Series
Ø123.5

Pag 573

S400 Series
SPLIT
HEAVY
HEAVY-SPLIT

Pag 575

S400B Series
SPLIT
HEAVY
HEAVY-SPLIT

Pag 599

C500 Series
SPLIT
HEAVY
HEAVY-SPLIT

Pag 626

Oadby Core product range of Easy Clean Levelling Feet can be found here.

Accessories

903

Pag 643

903

Pag 643

903

Pag 644

998

Pag 644

996

Pag 644

Basic Series

Delivery: Easy Standard

Main features:

- Molded baseplate in polyamide
- Spindle in austenitic stainless steel or zinc plated steel

Other versions available:

- Double floor fixation
- Base and spindle made in polyamide and zinc plated insert.

The **BASIC series**, with plastic baseplate and fully threaded spindle is the standard choice for the industrial environments.

The spindle can be made with flat or hexagonal key wrench and is available in two different materials, zinc plated steel or stainless steel.

Maximum compressive strength (static load) as in the table, maximum tensile strength (static load) 500 N.

Accessori / Accessories / Zubehör

Gomma anti-scivolo
Anti-slip pad/Gummiplatte

Art-Nr.	For base
99601	Ø40
99602	Ø50
99603	Ø60
99604	Ø80
99605	Ø100

Dadi
Nuts/Sechskantmuttern

Art-Nr.	Sp	Material	Box
99801	M10	Stainless steel	50 pcs
99802	M12	Stainless steel	50 pcs
99804	M16	Stainless steel	10 pcs
99805	M20	Stainless steel	10 pcs

Art-Nr.	Sp	Material	Box
99801Z	M10	Zinc plated steel	50 pcs
99802Z	M12	Zinc plated steel	50 pcs
99804Z	M16	Zinc plated steel	10 pcs
99805Z	M20	Zinc plated steel	10 pcs

Oadby Core product range
Oadby Available from stock in Leicester
Easy Available from stock in Italy
Standard Produced to order in Italy

Movex®

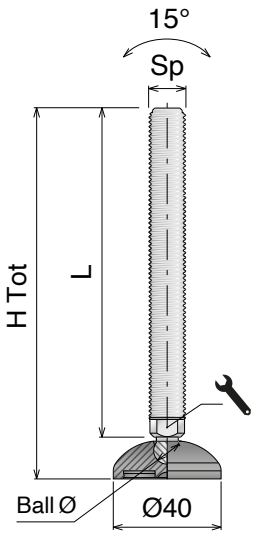

ø40
DIAMETER (mm)

Art-Nr.	Art-Nr.	Sp	H Tot (mm)	L (mm)	Ball Ø (mm)	(mm)		Load (N)
SS	FeZn					⬢	⬣	
90101	90101Z		50	35	6.85	7	-	
90102	90102Z	M10	100	85	6.85	7	-	10.000
90103	90103Z		150	135	6.85	7	-	
90201	90201Z		75	60	10	9	-	
90202	90202Z	M12	100	85	10	9	-	12.000
90203	90203Z		150	135	10	9	-	
90301	90301Z		75	60	10	13	-	
90302	90302Z		100	85	10	13	-	
90303	90303Z		150	135	10	13	-	
90301H	90301ZH	M16	75	60	10	-	16	15.000
90302H	90302ZH		100	85	10	-	16	
90303H	90303ZH		150	135	10	-	16	

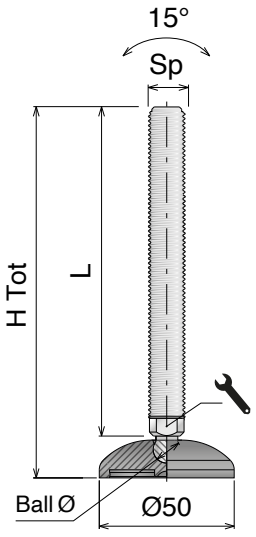

ø50
DIAMETER (mm)

Art-Nr.	Art-Nr.	Sp	H Tot (mm)	L (mm)	Ball Ø (mm)	(mm)		Load (N)
SS	FeZn					⬢	⬣	
90401	90401Z		50	35	6.85	7	-	
90402	90402Z	M10	100	85	6.85	7	-	10.000
90403	90403Z		150	135	6.85	7	-	
90501	90501Z		75	60	10	9	-	
90502	90502Z	M12	100	85	10	9	-	12.000
90503	90503Z		150	135	10	9	-	
90601	90601Z		75	60	10	13	-	
90602	90602Z		100	85	10	13	-	
90603	90603Z		150	135	10	13	-	
90601H	90601ZH	M16	75	60	10	-	16	15.000
90602H	90602ZH		100	85	10	-	16	
90603H	90603ZH		150	135	10	-	16	

Materiale / *Material* / *Materialien:*
SS: Acciaio inox / *Stainless steel* / *Edelstahl*
FeZn: Ferro zincato / *Zinc plated steel* / *Stahl Verzinkt*

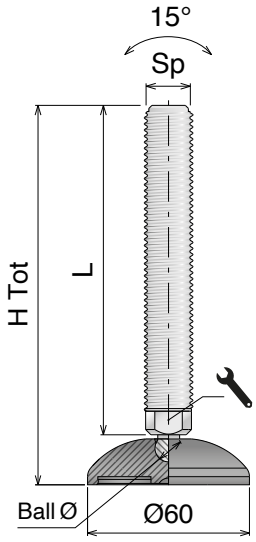

Ø60
DIAMETER (mm)

Art-Nr.	Art-Nr.	Sp	H Tot (mm)	L (mm)	Ball Ø (mm)	(mm)		Load (N)
SS	FeZn							
90701	90701Z	M12	80	60	10	9	-	12.000
90702	90702Z		105	85	10	9	-	
90703	90703Z		155	135	10	9	-	
90801	90801Z	M16	105	85	10	13	-	15.000
90802	90802Z		155	135	10	13	-	
90803	90803Z		205	185	10	13	-	
90801H	90801ZH		105	85	10	-	16	
90802H	90802ZH		155	135	10	-	16	
90803H	90803ZH		205	185	10	-	16	
90901	90901Z	M20	105	85	14,5	16	-	16.000
90902	90902Z		155	135	14,5	16	-	
90903	90903Z		205	185	14,5	16	-	
90901H	90901ZH		105	85	14,5	-	20	
90902H	90902ZH		155	135	14,5	-	20	
90903H	90903ZH		205	185	14,5	-	20	

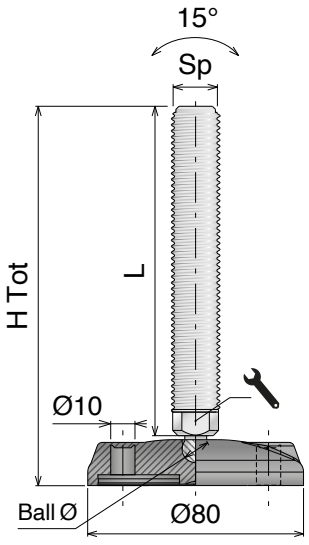

Ø80
DIAMETER (mm)

x2
FIXING POINT

Art-Nr.	Art-Nr.	Sp	H Tot (mm)	L (mm)	Ball Ø (mm)	(mm)		Load (N)
SS	FeZn							
95301	95301Z	M12	80	60	10	9	-	12.000
95302	95302Z		105	85	10	9	-	
95303	95303Z		155	135	10	9	-	
95401	95401Z	M16	105	85	10	13	-	15.000
95402	95402Z		155	135	10	13	-	
95403	95403Z		205	185	10	13	-	
95401H	95401ZH		105	85	10	-	16	
95402H	95402ZH		155	135	10	-	16	
95403H	95403ZH		205	185	10	-	16	
95501	95501Z	M20	105	85	14,5	16	-	18.000
95502	95502Z		155	135	14,5	16	-	
95503	95503Z		205	185	14,5	16	-	
95501H	95501ZH		105	85	14,5	-	20	
95502H	95502ZH		155	135	14,5	-	20	
95503H	95503ZH		205	185	14,5	-	20	

Oadby Core product range
Oadby Available from stock in Leicester
Easy Available from stock in Italy
Standard Produced to order in Italy

Movex

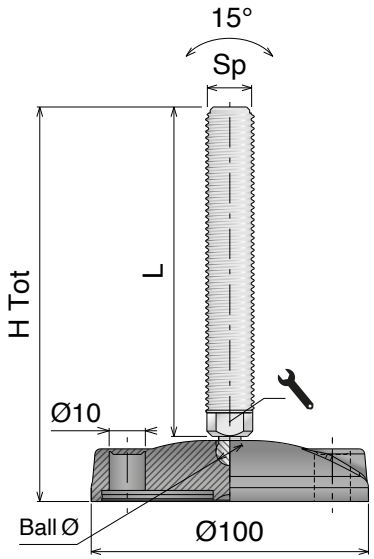

Ø100
DIAMETER (mm)

x2
FIXING POINT

Art-Nr.	Art-Nr.	Sp	H Tot (mm)	L (mm)	Ball Ø (mm)	(mm)		Load (N)
SS	FeZn					⬢	⬢	
95601	95601Z		108	85	10	13	-	15.000
95602	95602Z		158	135	10	13	-	
95603	95603Z	M16	208	185	10	13	-	
95601H	95601ZH		108	85	10	-	16	
95602H	95602ZH		158	135	10	-	16	
95603H	95603ZH		208	185	10	-	16	
95701	95701Z		108	85	14,5	16	-	18.000
95702	95702Z		158	135	14,5	16	-	
95703	95703Z	M20	208	185	14,5	16	-	
95701H	95701ZH		108	85	14,5	-	20	
95702H	95702ZH		158	135	14,5	-	20	
95703H	95703ZH		208	185	14,5	-	20	

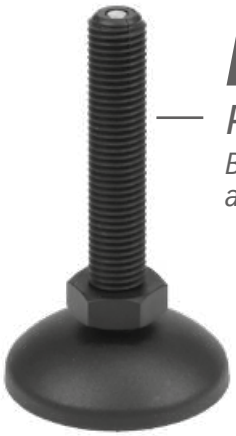

Basic Series
POLYAMIDE VERSION
Base and spindle made in polyamide and zinc plated insert.

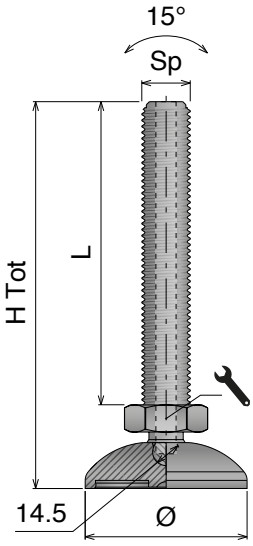

Ø60
DIAMETER (mm)

POLYAMIDE

Art-Nr.	Sp	H Tot (mm)	L (mm)	(mm)	Load (N)
FeZn insert				⬢	
90810PH	M16	105	76	24	12.000

Ø80
DIAMETER (mm)

x2
FIXING POINT

POLYAMIDE

Art-Nr.	Sp	H Tot (mm)	L (mm)	(mm)	Load (N)
FeZn insert				⬢	
95410PH	M16	105	76	24	12.000

Ø100
DIAMETER (mm)

x2
FIXING POINT

POLYAMIDE

Art-Nr.	Sp	H Tot (mm)	L (mm)	(mm)	Load (N)
FeZn insert				⬢	
95710PH	M16	110	76	24	12.000

Articulated Series

Delivery: Easy Standard

Main features:

- Molded baseplate in polyamide
- Spindle in austenitic stainless steel or zinc plated steel

Other versions available:

- Anti-slip NBR rubber pad
- Double floor fixation
- WIth PA ball

The **ARTICULATED series**, with plastic baseplate and fully threaded spindle is the standard choice for the industrial environments.

The spindle is made with hexagonal key wrench and available in two different materials, zinc plated steel or stainless steel and the baseplate is available with or without rubber pad.

Maximum compressive strength (static load) as in the table, maximum tensile strength (static load) 500 N.

Accessori / Accessories / Zubehör

Gomma anti-scivolo
Anti-slip pad/Gummiplatte

Art-Nr.	For base
99607	Ø110
99608	Ø123

Dadi
Nuts/Sechskantmuttern

Art-Nr.	Sp	Material	Box
99804	M16	Stainless steel	10 pcs
99805	M20	Stainless steel	10 pcs
99806	M24	Stainless steel	5 pcs

Art-Nr.	Sp	Material	Box
99804Z	M16	Zinc plated steel	10 pcs
99805Z	M20	Zinc plated steel	10 pcs
99806Z	M24	Zinc plated steel	5 pcs

Oadby Core product range
Oadby Available from stock in Leicester
Easy Available from stock in Italy
Standard Produced to order in Italy

Movex®

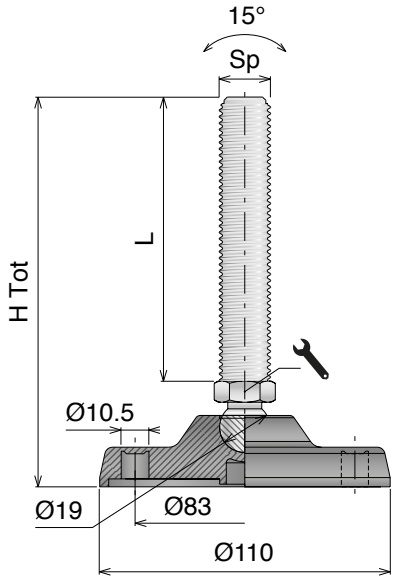

Ø110
DIAMETER (mm)

x2
FIXING POINT

Art-Nr. SS	Art-Nr. FeZn	Sp	H Tot (mm)	L (mm)	(mm)	Load (N)
94301H	94301ZH	M16	155	115	20	15.000
94302H	94302ZH		185	145	20	
94303H	94303ZH		235	195	20	
94401H	94401ZH	M20	155	115	20	
94402H	94402ZH		185	145	20	
94403H	94403ZH		235	195	20	
94501H	94501ZH	M24	155	115	24	18.000
94502H	94502ZH		185	145	24	
94503H	94503ZH		235	195	24	

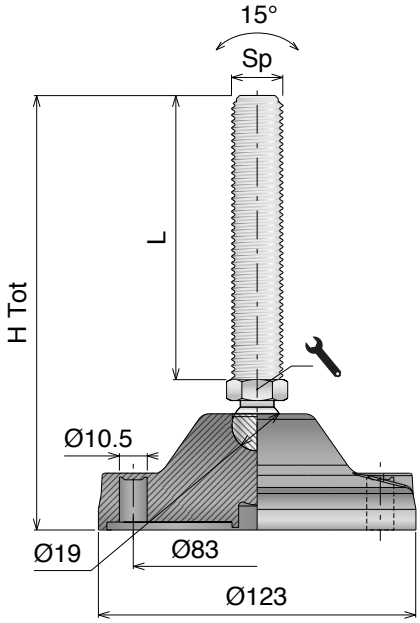

Ø123
DIAMETER (mm)

x2
FIXING POINT

Art-Nr. SS	Art-Nr. FeZn	Sp	H Tot (mm)	L (mm)	(mm)	Load (N)
94801H	94801ZH	M16	175	115	20	25.000
94802H	94802ZH		205	145	20	
94803H	94803ZH		255	195	20	
94901H	94901ZH	M20	175	115	20	
94902H	94902ZH		205	145	20	
94903H	94903ZH		255	195	20	
95001H	95001ZH	M24	175	115	24	
95002H	95002ZH		205	145	24	
95003H	95003ZH		255	195	24	

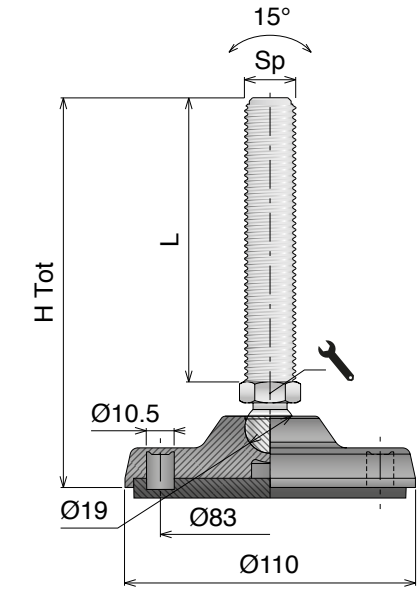

Ø110
DIAMETER (mm)

x2
FIXING POINT

ANTI-SLIP

Art-Nr. SS	Art-Nr. FeZn	Sp	H Tot (mm)	L (mm)	(mm)	Load (N)
94351H	94351ZH	M16	155	115	20	15.000
94352H	94352ZH		185	145	20	
94353H	94353ZH		235	195	20	
94451H	94451ZH	M20	155	115	20	
94452H	94452ZH		185	145	20	
94453H	94453ZH		235	195	20	
94551H	94551ZH	M24	155	115	24	18.000
94552H	94552ZH		185	145	24	
94553H	94553ZH		235	195	24	

Materiale / *Material* / *Materialien:*
SS: Acciaio inox / *Stainless steel* / *Edelstahl*
FeZn: Ferro zincato / *Zinc plated steel* / *Stahl Verzinkt*

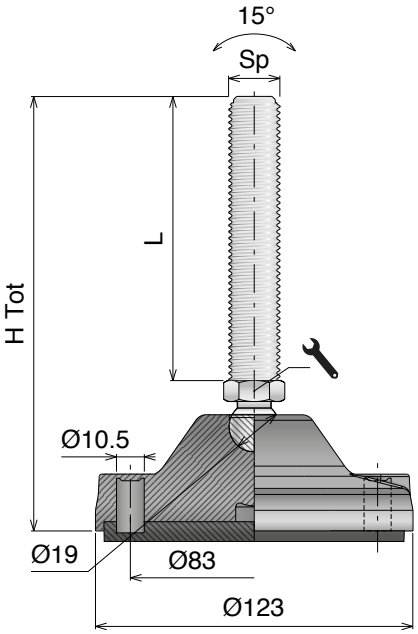

Ø123 DIAMETER (mm) — x2 FIXING POINT — ANTI-SLIP

Art-Nr.	Art-Nr.	Sp	H Tot (mm)	L (mm)	(mm)	Load (N)
SS	FeZn				⬢	
94851H	94851ZH	M16	175	115	20	
94852H	94852ZH		205	145	20	
94853H	94853ZH		255	195	20	
94951H	94951ZH	M20	175	115	20	25.000
94952H	94952ZH		205	145	20	
94953H	94953ZH		255	195	20	
95051H	95051ZH	M24	175	115	24	
95052H	95052ZH		205	145	24	
95053H	95053ZH		255	195	24	

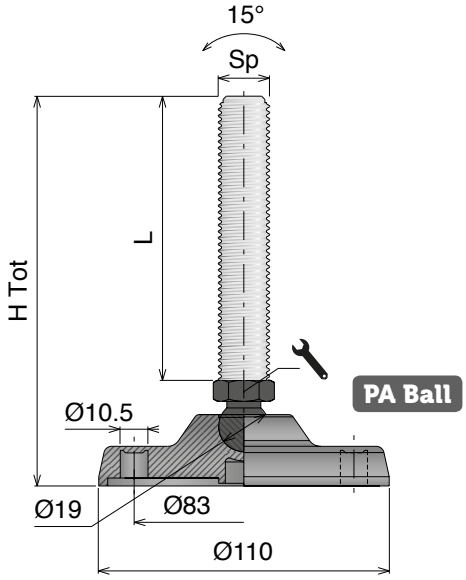

Ø110 DIAMETER (mm) — PA-BALL — x2 FIXING POINT

Art-Nr.	Art-Nr.	Sp	H Tot (mm)	L (mm)	(mm)	Load (N)
SS	FeZn				⬢	
-	94601ZH	M16	155	115	24	12.000
94602H	94602ZH		185	145	24	
94603H	94603ZH		235	195	24	
94701H	94701ZH	M20	155	115	24	
-	94702ZH		185	145	24	
94703H	94703ZH		235	195	24	

Best Value

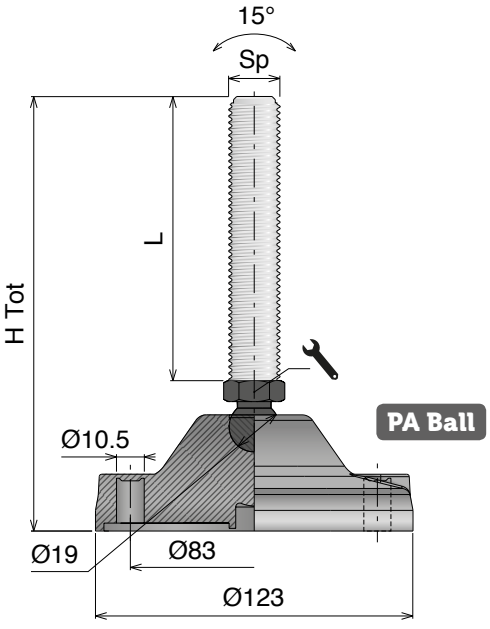

Ø123 DIAMETER (mm) — PA-BALL — x2 FIXING POINT

Art-Nr.	Art-Nr.	Sp	H Tot (mm)	L (mm)	(mm)	Load (N)
SS	FeZn				⬢	
-	95101ZH	M16	175	115	24	20.000
95102H	95102ZH		205	145	24	
95103H	95103ZH		255	195	24	
95201H	95201ZH	M20	175	115	24	
-	95202ZH		205	145	24	
95203H	95203ZH		255	195	24	

Best Value

Oadby Core product range
Oadby Available from stock in Leicester
Easy Available from stock in Italy
Standard Produced to order in Italy

Movex

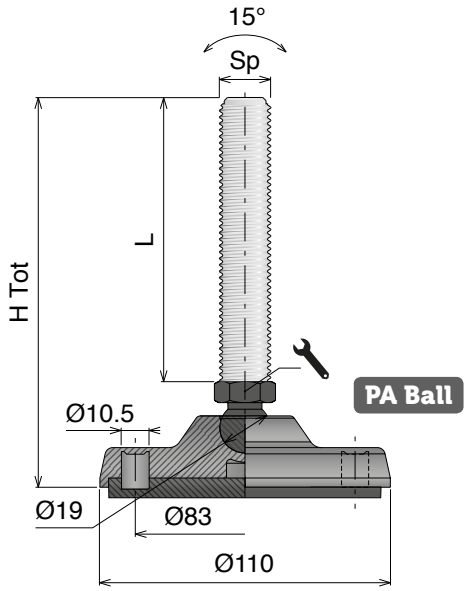

Ø110

DIAMETER (mm) | PA-BALL | FIXING POINT x2 | ANTI-SLIP

Art-Nr. SS	Art-Nr. FeZn	Sp	H Tot (mm)	L (mm)	(mm)	Load (N)
-	94651ZH	M16	155	115	24	12.000
94652H	94652ZH		185	145	24	
94653H	94653ZH		235	195	24	
94751H	94751ZH	M20	155	115	24	
-	94752ZH		185	145	24	
94753H	94753ZH		235	195	24	

Best Value

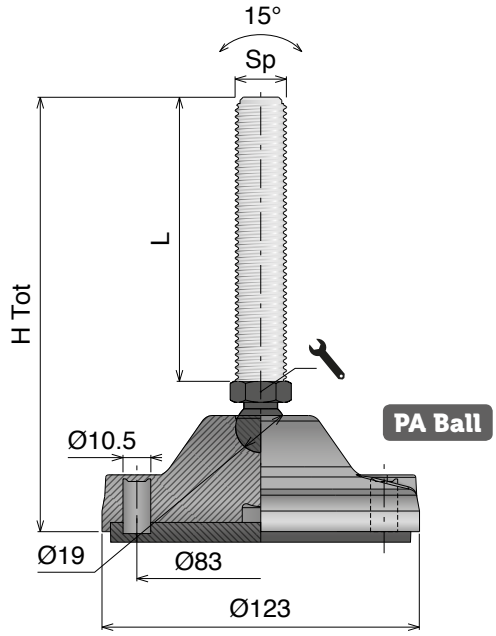

Ø123

DIAMETER (mm) | PA-BALL | FIXING POINT x2 | ANTI-SLIP

Art-Nr. SS	Art-Nr. FeZn	Sp	H Tot (mm)	L (mm)	(mm)	Load (N)
-	95151ZH	M16	175	115	24	20.000
95152H	95152ZH		205	145	24	
95153H	95153ZH		255	195	24	
95251H	95251ZH	M20	175	115	24	
-	95252ZH		205	145	24	
95253H	95253ZH		255	195	24	

Best Value

Muscle Series

Delivery: Easy Standard

Main features:

- Molded baseplate in polyamide
- Spindle in austenitic stainless steel or zinc plated steel
- Washer in austenitic stainless steel
- Double floor fixation points

Other versions available:

- Anti-slip NBR rubber pad
- Double floor fixation

The **MUSCLE series**, with plastic baseplate, fully threaded spindle and stainless steel washer is the standard choice for the industrial environments.

The spindle can be made with flat or hexagonal key wrench and is available in two different materials, zinc plated steel or stainless steel and the baseplate is available with or without rubber pad.

The spindle is fixed by using a circlip or with a self-locking nut.

Maximum compressive strength (static load) as in the table, maximum tensile strength (static load) 1.000 N

Accessori / Accessories / Zubehör

Gomma anti-scivolo
Anti-slip pad/Gummiplatte

Art-Nr.	For base
99608	Ø123

Dadi
Nuts/Sechskantmuttern

Art-Nr.	Sp	Material	Box
99805	M20	Stainless steel	10 pcs
99806	M24	Stainless steel	5 pcs
99807	M30	Stainless steel	5 pcs

Art-Nr.	Sp	Material	Box
99805Z	M20	Zinc plated steel	10 pcs
99806Z	M24	Zinc plated steel	5 pcs
99807Z	M30	Zinc plated steel	5 pcs

Oadby Core product range
Oadby Available from stock in Leicester
Easy Available from stock in Italy
Standard Produced to order in Italy
Movex

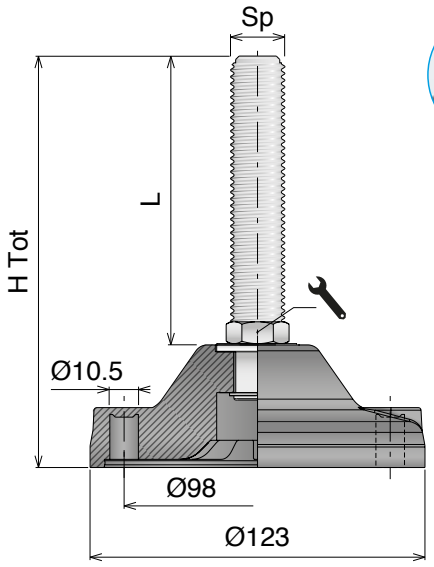

Ø123 Type A

DIAMETER (mm) — FIXING POINT x2

Art-Nr. SS	Art-Nr. FeZn	Sp	H Tot (mm)	L (mm)	(mm)	Load (N)
95801H	95801ZH	M20	150	98	20	30.000
95802H	95802ZH	M20	200	148	20	
95803H	95803ZH	M20	250	198	20	
95901H	95901ZH	M24	150	98	24	
95902H	95902ZH	M24	200	148	24	
95903H	95903ZH	M24	250	198	24	

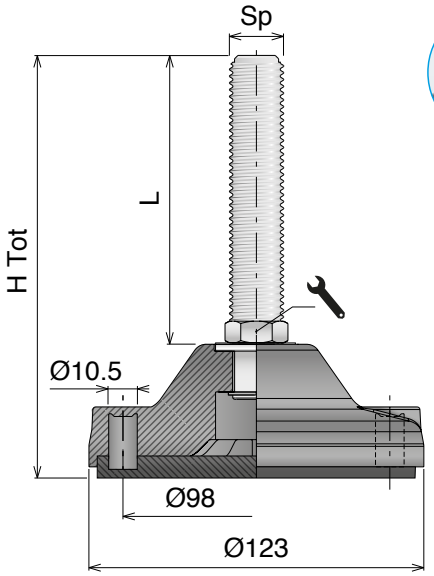

Ø123 Type A

DIAMETER (mm) — FIXING POINT x2 — ANTI-SLIP

Art-Nr. SS	Art-Nr. FeZn	Sp	H Tot (mm)	L (mm)	(mm)	Load (N)
95851H	95851ZH	M20	150	98	20	30.000
95852H	95852ZH	M20	200	148	20	
95853H	95853ZH	M20	250	198	20	
95951H	95951ZH	M24	150	98	24	
95952H	95952ZH	M24	200	148	24	
95953H	95953ZH	M24	250	198	24	

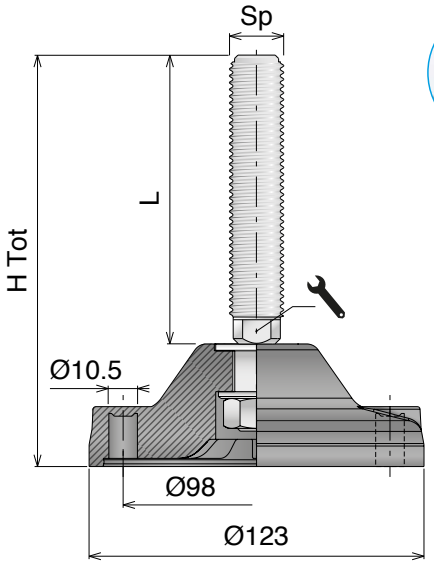

Ø123 Type B

DIAMETER (mm) — FIXING POINT x2

Art-Nr. SS	Art-Nr. FeZn	Sp	H Tot (mm)	L (mm)	(mm)	Load (N)
93102	93102Z	M20	200	148	16	30.000
93103	93103Z	M20	250	198	16	
93202	93202Z	M24	200	148	19	
93203	93203Z	M24	250	198	19	
93302	93302Z	M30	200	148	24	
93303	93303Z	M30	250	198	24	

Materiale / *Material* / *Materialien:*
SS: Acciaio inox / *Stainless steel* / *Edelstahl*
FeZn: Ferro zincato / *Zinc plated steel* / *Stahl Verzinkt*

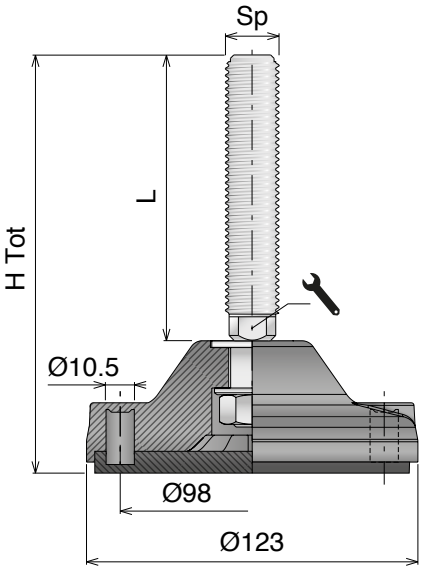

Ø123 Type B

DIAMETER (mm) | x2 FIXING POINT | ANTI-SLIP

Art-Nr. SS	Art-Nr. FeZn	Sp	H Tot (mm)	L (mm)	(mm)	Load (N)
93152	93152Z	M20	200	148	16	30.000
93153	93153Z		250	198	16	
93252	93252Z	M24	200	148	19	
93253	93253Z		250	198	19	
93352	93352Z	M30	200	148	24	
93353	93353Z		250	198	24	

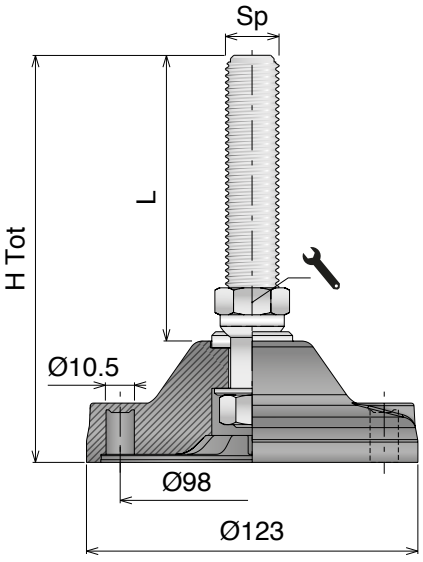

Ø123 Type C

DIAMETER (mm) | x2 FIXING POINT

Art-Nr. SS	Art-Nr. FeZn	Sp	H Tot (mm)	L (mm)	(mm)	Load (N)
98103H	98103ZH	M20	250	198	24	30.000
98203H	98203ZH	M24	250	198	24	
98302H	98302ZH	M30	200	148	32	
98303H	98303ZH		250	198	32	

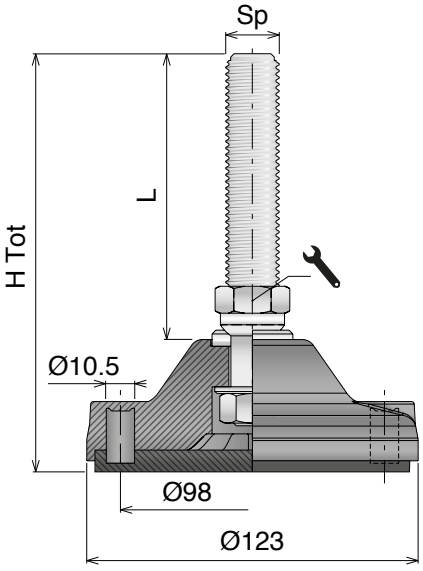

Ø123 Type C

DIAMETER (mm) | x2 FIXING POINT | ANTI-SLIP

Art-Nr. SS	Art-Nr. FeZn	Sp	H Tot (mm)	L (mm)	(mm)	Load (N)
98153H	98153ZH	M20	250	198	24	30.000
98253H	98253ZH	M24	250	198	24	
98352H	98352ZH	M30	200	148	32	
98353H	98353ZH		250	198	32	

Oadby Core product range
Oadby Available from stock in Leicester | Easy Available from stock in Italy | Standard Produced to order in Italy

Movex

P400R Series

RANGE EXTENSION

Delivery: Easy Standard

Main features:

- Molded baseplate in polyamide
- Spindle in austenitic stainless steel or zinc plated steel
- Washer in austenitic stainless steel

Versions available:

- Anti-slip NBR rubber pad
- Double floor fixation

The **P400R series**, with plastic baseplate, fully threaded spindle and stainless steel washer is the best choice for industrial environments where a medium-high level of hygiene is required.

The compact baseplate and the smooth edges guarantee an excellent cleanability, even in critical conditions and the stainless steel washer ensures complete closure between the spindle and the baseplate.

Maximum compressive strength (static load) as in the table, maximum tensile strength (static load) 500 N.

Accessori / Accessories / Zubehör

Gomma anti-scivolo
Anti-slip pad/Gummiplatte

Art-Nr.	For base
99604	Ø80
99605	Ø100
99606	Ø120

Dadi
Nuts/Sechskantmuttern

Art-Nr.	Sp	Material	Box
99802	M12	Stainless steel	10 pcs
99804	M16	Stainless steel	10 pcs
99805	M20	Stainless steel	10 pcs
99806	M24	Stainless steel	5 pcs
99802Z	M12	Zinc plated steel	10 pcs
99804Z	M16	Zinc plated steel	10 pcs
99805Z	M20	Zinc plated steel	10 pcs
99806Z	M24	Zinc plated steel	5 pcs

Materiale / *Material* / *Materialien:*
SS: Acciaio inox / *Stainless steel* / *Edelstahl*
FeZn: Ferro zincato / *Zinc plated steel* / *Stahl Verzinkt*

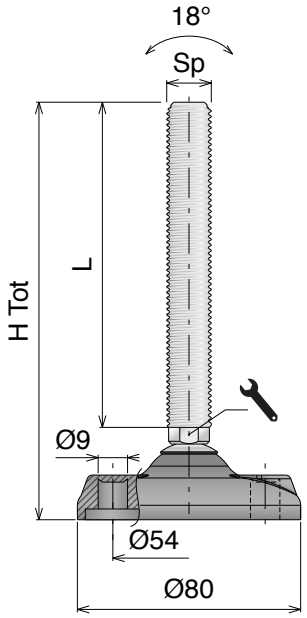

Ø80
DIAMETER (mm)

x2
FIXING POINT

Art-Nr.	Art-Nr.	Sp	H Tot (mm)	L (mm)	(mm)		Load (N)
SS	FeZn				⬢	⬣	
91001	91001Z	M12	100	67	9	-	12.000
91002	91002Z		150	117	9	-	
91003	91003Z		200	167	9	-	
91101	91101Z	M16	95	61	13	-	15.000
91102	91102Z		145	111	13	-	
91103	91103Z		195	161	13	-	
91101H	91101ZH		95	61	-	16	
91102H	91102ZH		145	111	-	16	
91103H	91103ZH		195	161	-	16	
91201	91201Z	M20	120	84	16	-	16.000
91202	91202Z		170	134	16	-	
91203	91203Z		220	184	16	-	
91201H	91201ZH		120	84	-	20	
91202H	91202ZH		170	134	-	20	
91203H	91203ZH		220	184	-	20	

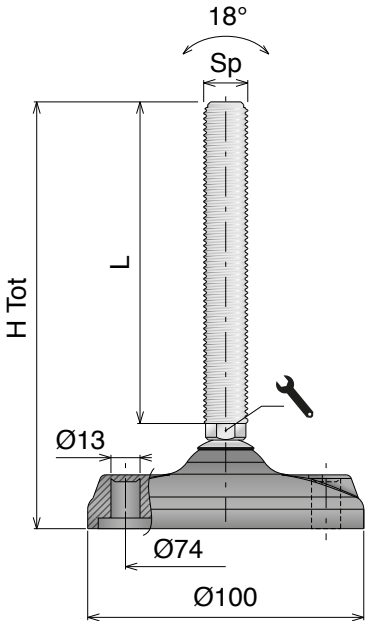

Ø100
DIAMETER (mm)

x2
FIXING POINT

Art-Nr.	Art-Nr.	Sp	H Tot (mm)	L (mm)	(mm)		Load (N)
SS	FeZn				⬢	⬣	
91301	91301Z	M16	100	61	13	-	15.000
91302	91302Z		150	111	13	-	
91303	91303Z		200	161	13	-	
91301H	91301ZH		100	61	-	16	
91302H	91302ZH		150	111	-	16	
91303H	91303ZH		200	161	-	16	
91401	91401Z	M20	125	84	16	-	16.000
91402	91402Z		175	134	16	-	
91403	91403Z		225	184	16	-	
91401H	91401ZH		125	84	-	20	
91402H	91402ZH		175	134	-	20	
91403H	91403ZH		225	184	-	20	
91501	91501Z	M24	125	83	19	-	18.000
91502	91502Z		175	133	19	-	
91503	91503Z		225	183	19	-	

Oadby Core product range
Oadby Available from stock in Leicester
Easy Available from stock in Italy
Standard Produced to order in Italy

Movex

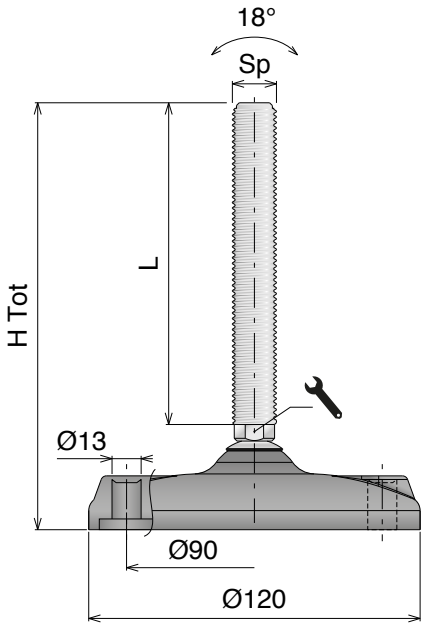

Ø120

DIAMETER (mm)

x2 FIXING POINT

Art-Nr.	Art-Nr.	Sp	H Tot (mm)	L (mm)	(mm)		Load (N)
SS	FeZn				⬢	⬣	
91601	91601Z	M16	100	61	13	-	15.000
91602	91602Z		150	111	13	-	
91603	91603Z		200	161	13	-	
91601H	91601ZH		100	61	-	16	
91602H	91602ZH		150	111	-	16	
91603H	91603ZH		200	161	-	16	
91701	91701Z	M20	125	84	16	-	16.000
91702	91702Z		175	134	16	-	
91703	91703Z		225	184	16	-	
91701H	91701ZH		125	84	-	20	
91702H	91702ZH		175	134	-	20	
91703H	91703ZH		225	184	-	20	
91801	91801Z	M24	125	83	19	-	18.000
91802	91802Z		175	133	19	-	
91803	91803Z		225	183	19	-	

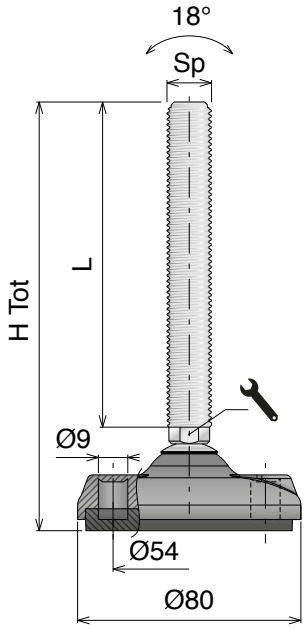

Ø80

DIAMETER (mm)

x2 FIXING POINT

ANTI-SLIP

Art-Nr.	Art-Nr.	Sp	H Tot (mm)	L (mm)	(mm)		Load (N)
SS	FeZn				⬢	⬣	
91001R	91001ZR	M12	103	67	9	-	12.000
91002R	91002ZR		153	117	9	-	
91003R	91003ZR		203	167	9	-	
91101R	91101ZR	M16	98	61	13	-	15.000
91102R	91102ZR		148	111	13	-	
91103R	91103ZR		198	161	13	-	
91101HR	91101ZHR		98	61	-	16	
91102HR	91102ZHR		148	111	-	16	
91103HR	91103ZHR		198	161	-	16	
91201R	91201ZR	M20	123	84	16	-	16.000
91202R	91202ZR		173	134	16	-	
91203R	91203ZR		223	184	16	-	
91201HR	91201ZHR		123	84	-	20	
91202HR	91202ZHR		173	134	-	20	
91203HR	91203ZHR		223	184	-	20	

Materiale / *Material* / *Materialien:*
SS: Acciaio inox / *Stainless steel* / *Edelstahl*
FeZn: Ferro zincato / *Zinc plated steel* / *Stahl Verzinkt*

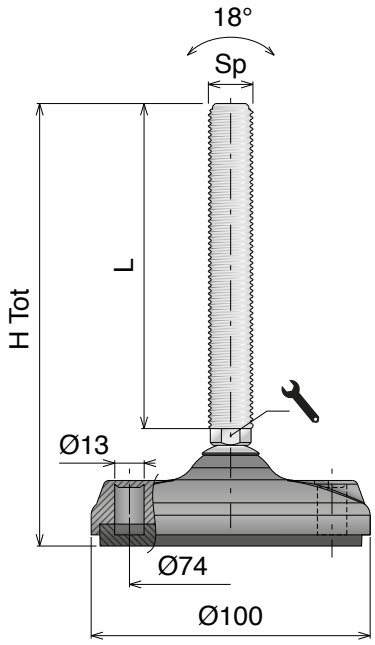

ø100
DIAMETER (mm)

FIXING POINT x2 — ANTI-SLIP

Art-Nr.	Art-Nr.	Sp	H Tot (mm)	L (mm)	(mm)		Load (N)
SS	FeZn						
91301R	91301ZR	M16	103	61	13	-	15.000
91302R	91302ZR		153	111	13	-	
91303R	91303ZR		203	161	13	-	
91301HR	91301ZHR		103	61	-	16	
91302HR	91302ZHR		153	111	-	16	
91303HR	91303ZHR		203	161	-	16	
91401R	91401ZR	M20	128	84	16	-	16.000
91402R	91402ZR		178	134	16	-	
91403R	91403ZR		228	184	16	-	
91401HR	91401ZHR		128	84	-	20	
91402HR	91402ZHR		178	134	-	20	
91403HR	91403ZHR		228	184	-	20	
91501R	91501ZR	M24	128	83	19	-	18.000
91502R	91502ZR		178	133	19	-	
91503R	91503ZR		228	183	19	-	

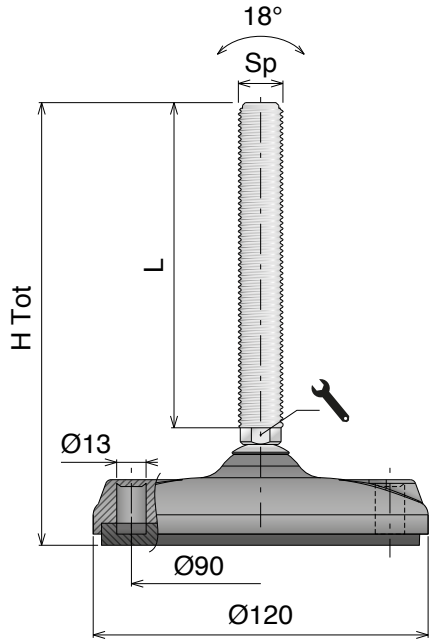

ø120
DIAMETER (mm)

FIXING POINT x2 — ANTI-SLIP

Art-Nr.	Art-Nr.	Sp	H Tot (mm)	L (mm)	(mm)		Load (N)
SS	FeZn						
91601R	91601ZR	M16	103	61	13	-	15.000
91602R	91602ZR		153	111	13	-	
91603R	91603ZR		203	161	13	-	
91601HR	91601ZHR		103	61	-	16	
91602HR	91602ZHR		153	111	-	16	
91603HR	91603ZHR		203	161	-	16	
91701R	91701ZR	M20	128	84	16	-	16.000
91702R	91702ZR		178	134	16	-	
91703R	91703ZR		228	184	16	-	
91701HR	91701ZHR		128	84	-	20	
91702HR	91702ZHR		178	134	-	20	
91703HR	91703ZHR		228	184	-	20	
91801R	91801ZR	M24	128	83	19	-	18.000
91802R	91802ZR		178	133	19	-	
91803R	91803ZR		228	183	19	-	

Oadby Core product range
Oadby Available from stock in Leicester
Easy Available from stock in Italy
Standard Produced to order in Italy

Movex

STEEL Series

Delivery: Easy Standard

Main features:

- Stamped baseplate in austenitic stainless steel or zinc plated steel
- Spindle in austenitic stainless steel or zinc plated steel

The **STEEL series**, with stamped baseplate and fully threaded spindle is the standard choice for the industrial environments, where a low level of hygiene and low load are required.

Ideal for heavy and dirthy production environments, the STEEL series can be provided without fixing holes, with 2 fixing holes or with 4 fixing holes.

The spindle is made with hexagonal key wrench and is available in two different materials, zinc plated steel or stainless steel.

Maximum compressive strength (static load) 10.000 N, maximum tensile strength (static load) 4.000 N.

Accessori / Accessories / Zubehör

Dadi
Nuts/Sechskantmuttern

Art-Nr.	Sp	Material	Box
99804	M16	Stainless steel	10 pcs
99805	M20	Stainless steel	10 pcs
99806	M24	Stainless steel	5 pcs
99807	M30	Stainless steel	5 pcs

Art-Nr.	Sp	Material	Box
99804Z	M16	Zinc plated steel	10 pcs
99805Z	M20	Zinc plated steel	10 pcs
99806Z	M24	Zinc plated steel	5 pcs
99807Z	M30	Zinc plated steel	5 pcs

Materiale / *Material* / *Materialien:*
SS: Acciaio inox / *Stainless steel* / *Edelstahl*
FeZn: Ferro zincato / *Zinc plated steel* / *Stahl Verzinkt*

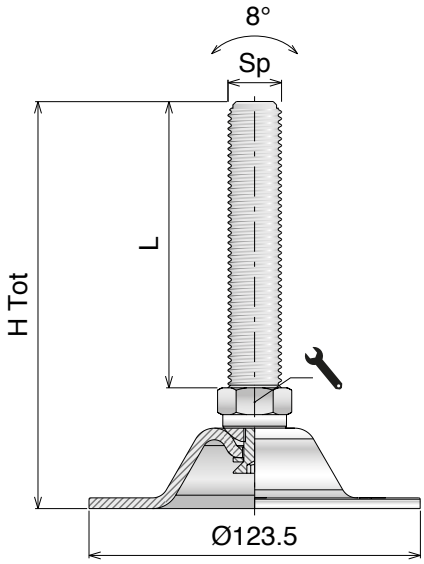

Top view

Ø123
DIAMETER (mm)

Art-Nr. SS	Art-Nr. FeZn	Sp	H Tot (mm)	L (mm)	(mm) ⬢	Load (N)
96801H	96801ZH	M16	155	115	20	10.000
96802H	96802ZH		175	135	20	
96901H	96901ZH	M20	160	115	24	
96902H	96902ZH		175	135	24	
97001H	97001ZH	M24	170	125	24	
97002H	97002ZH		230	185	24	
97101H	97101ZH	M30	170	125	32	
97102H	97102ZH		230	185	32	

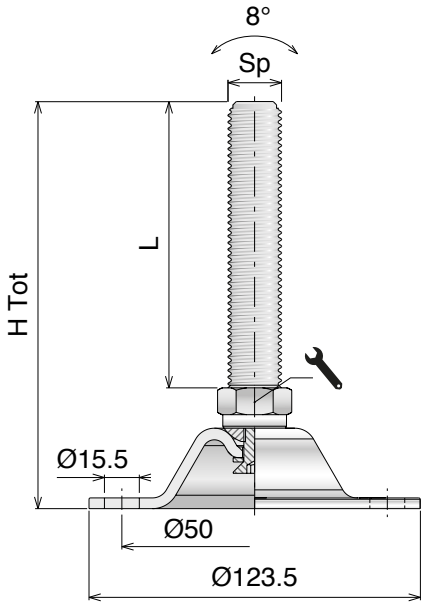

Top view

Ø123
DIAMETER (mm)

x2
FIXING POINT

Art-Nr. SS	Art-Nr. FeZn	Sp	H Tot (mm)	L (mm)	(mm) ⬢	Load (N)
96401H	96401ZH	M16	155	115	20	10.000
96402H	96402ZH		175	135	20	
96501H	96501ZH	M20	160	115	24	
96502H	96502ZH		175	135	24	
96601H	96601ZH	M24	170	125	24	
96602H	96602ZH		230	185	24	
96701H	96701ZH	M30	170	125	32	
96702H	96702ZH		230	185	32	

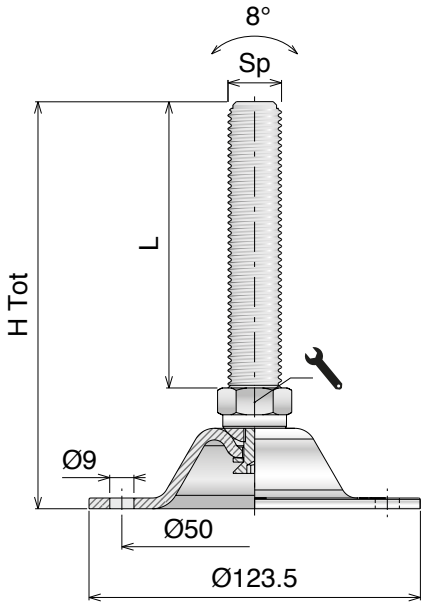

Top view

Ø123
DIAMETER (mm)

x4
FIXING POINT

Art-Nr. SS	Art-Nr. FeZn	Sp	H Tot (mm)	L (mm)	(mm) ⬢	Load (N)
96001H	96001ZH	M16	155	115	20	10.000
96002H	96002ZH		175	135	20	
96101H	96101ZH	M20	160	115	24	
96102H	96102ZH		175	135	24	
96201H	96201ZH	M24	170	125	24	
96202H	96202ZH		230	185	24	
96301H	96301ZH	M30	170	125	32	
96302H	96302ZH		230	185	32	

Oadby Core product range
Oadby Available from stock in Leicester
Easy Available from stock in Italy
Standard Produced to order in Italy

Movex®

S400 Series

STAINLESS STEEL LEVELERS
WITH FULLY THREADED SPINDLE

RANGE EXTENSION

S400

Main features:

- Overmolded baseplate in austenitic stainless steel
- Spindle in austenitic stainless steel
- Washer in austenitic stainless steel
- Vulcanized anti-slip NBR rubber

Versions available:

- Single floor fixation

S400 SPLIT

Main features:

- Overmolded baseplate in austenitic stainless steel
- Spindle in austenitic stainless steel
- Separate spindle and baseplate
- Vulcanized anti-slip NBR rubber

S400 HEAVY

Main features:

- Full machined baseplate in austenitic stainless steel
- Spindle in austenitic stainless steel
- Washer in austenitic stainless steel

Versions available:

- Vulcanized anti-slip NBR rubber
- Double floor fixation

S400 HEAVY-SPLIT

Main features:

- Full machined baseplate in austenitic stainless steel
- Spindle in austenitic stainless steel
- Separate spindle and baseplate

Versions available:

- Vulcanized anti-slip NBR rubber

The **S400 series**, with overmolded base plate in austenitic stainless steel, fully threaded spindle and stainless steel washer is the best choice for industrial environments where a high level of hygiene is required.

The stainless steel baseplate and its particular shape guarantees an excellent cleanability, even in critical conditions; the stainless steel washer ensures complete closure between the spindle and the baseplate and the NBR rubber guarantees anti-slip properties and hermetic closure between the leveller and the floor.

Maximum compressive strength (static load) as in the table, maximum tensile strength (static load) 4.000 N (S400); 8.000 N (S400 HEAVY); NOT AVAILABLE (SPLIT and HEAVY-SPLIT).

Core product range of Easy Clean Levelling Feet can be found here.

S400 Series

Piedi di livellamento / *Leveling feet* / *Nivellierfüße*

On request vulcanized rubber can be provided white or blue and spindle can be made in AISI 316.

Materiale / *Material* / *Materialien:*
Base, stelo e rondella: Acciaio inox
Base plate, spindle and washer: Stainless steel
Fussplatte, Spindel und Scheibe: Edelstahl

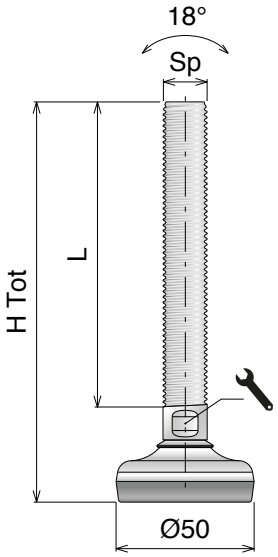

Ø50

DIAMETER (mm) — ANTI-SLIP

Art-Nr.	Sp	H Tot (mm)	L (mm)	(mm)	Load (N)
901001	M10	85,8	50,5	8	3.000
901002		115,8	80,5	8	
901003		145,8	110,5	8	
901004	M12	85,8	50,8	10	3.000
901005		115,8	80,8	10	
901006		145,8	110,8	10	
901007		175,8	140,8	10	
901008	M16	85,8	51,3	13	3.000
901009		115,8	81,3	13	
901010		145,8	111,3	13	
901011		175,8	141,3	13	
901012		225,8	191,3	13	
901013	M20	85,8	52,3	17	3.000
901014		115,8	82,3	17	
901015		145,8	112,3	17	
901016		175,8	142,3	17	
901017		225,8	192,3	17	
901018		285,8	252,3	17	

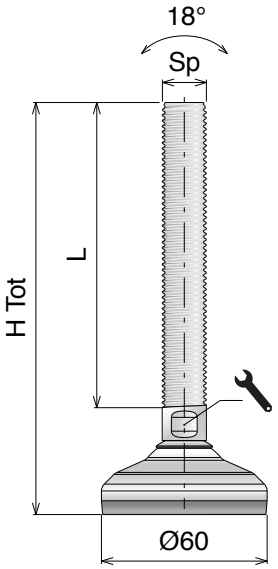

Ø60

DIAMETER (mm) — ANTI-SLIP

Art-Nr.	Sp	H Tot (mm)	L (mm)	(mm)	Load (N)
901019	M10	90	50,5	8	3.000
901020		120	80,5	8	
901021		150	110,5	8	
901022	M12	90	50,8	10	4.500
901023		120	80,8	10	
901024		150	110,8	10	
901025		180	140,8	10	
901026	M16	90	51,3	13	4.500
901027		120	81,3	13	
901028		150	111,3	13	
901029		180	141,3	13	
901030		230	191,3	13	
901031	M20	90	52,3	17	4.500
901032		120	82,3	17	
901033		150	112,3	17	
901034		180	142,3	17	
901035		230	192,3	17	
901036		290	252,3	17	

On request vulcanized rubber can be provided white or blue | On request spindle can be made in AISI 316

Core product range of Easy Clean Levelling Feet can be found here.

Core product range
Available from stock in Leicester
Easy Available from stock in Italy
Standard Produced to order in Italy

Movex

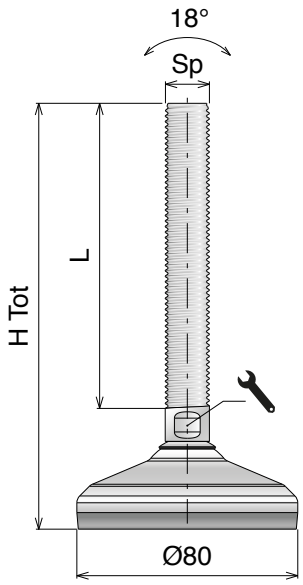

Ø80
DIAMETER (mm)

ANTI-SLIP

Art-Nr.	Sp	H Tot (mm)	L (mm)	(mm)	Load (N)
901080	M12	95	50,8	10	12.000
901081		125	80,8	10	
901082		155	110,8	10	
901083		185	140,8	10	
901084	M16	95	51,3	13	15.000
901085		125	81,3	13	
901086		155	111,3	13	
901087		185	141,3	13	
901088		235	191,3	13	
901089	M20	95	52,3	17	15.000
901090		125	82,3	17	
901091		155	112,3	17	
901092		185	142,3	17	
901093		235	192,3	17	
901094		295	252,3	17	
901095	M24	125	76	19	15.000
901096		155	106	19	
901097		185	136	19	
901098		235	186	19	
901099		295	246	19	
901100	M30	155	106	24	15.000
901101		185	136	24	
901102		235	186	24	
901103		295	246	24	
901104		345	296	24	

Core product range of Easy Clean Levelling Feet can be found here.

On request vulcanized rubber can be provided white or blue and spindle can be made in AISI 316.

Materiale / *Material* / *Materialien:*
Base, stelo e rondella: Acciaio inox
Base plate, spindle and washer: Stainless steel
Fussplatte, Spindel und Scheibe: Edelstahl

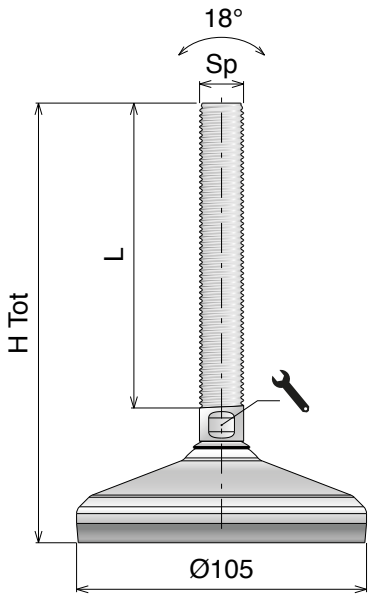

Ø105
DIAMETER (mm) — ANTI-SLIP

Art-Nr.	Sp	H Tot (mm)	L (mm)	(mm)	Load (N)
901130	M16	100	51,3	13	25.000
901131		130	81,3	13	
901132		160	111,3	13	
901133		190	141,3	13	
901134		240	191,3	13	
901135	M20	100	52,3	17	25.000
901136		130	82,3	17	
901137		160	112,3	17	
901138		190	142,3	17	
901139		240	192,3	17	
901140		300	252,3	17	
901141	M24	130	76	19	25.000
901142		160	106	19	
901143		190	136	19	
901144		240	186	19	
901145		300	246	19	
901146	M30	160	106	24	25.000
901147		190	136	24	
901148		240	186	24	
901149		300	246	24	
901150		350	296	24	
901151	M36	190	136	30	25.000
901152		240	186	30	
901153		300	246	30	
901154		350	296	30	

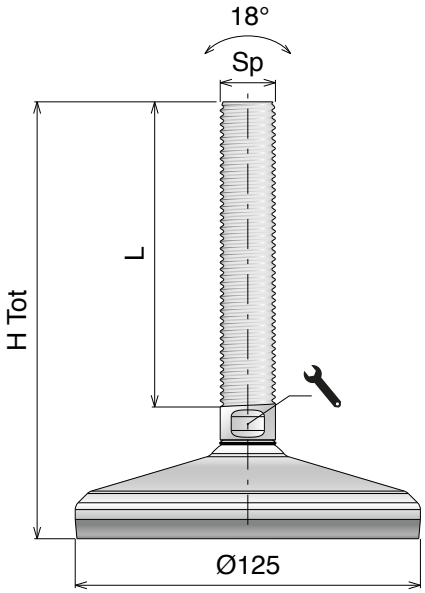

Ø125
DIAMETER (mm) — ANTI-SLIP

Art-Nr.	Sp	H Tot (mm)	L (mm)	(mm)	Load (N)
901155	M20	100	52,3	17	30.000
901156		130	82,3	17	
901157		160	112,3	17	
901158		190	142,3	17	
901159		240	192,3	17	
901160		300	252,3	17	
901161	M24	130	76	19	30.000
901162		160	106	19	
901163		190	136	19	
901164		240	186	19	
901165		300	246	19	
901166	M30	160	106	24	30.000
901167		190	136	24	
901168		240	186	24	
901169		300	246	24	
901170		350	296	24	
901171	M36	190	136	30	30.000
901172		240	186	30	
901173		300	246	30	
901174		350	296	30	

Core product range of Easy Clean Levelling Feet can be found here.

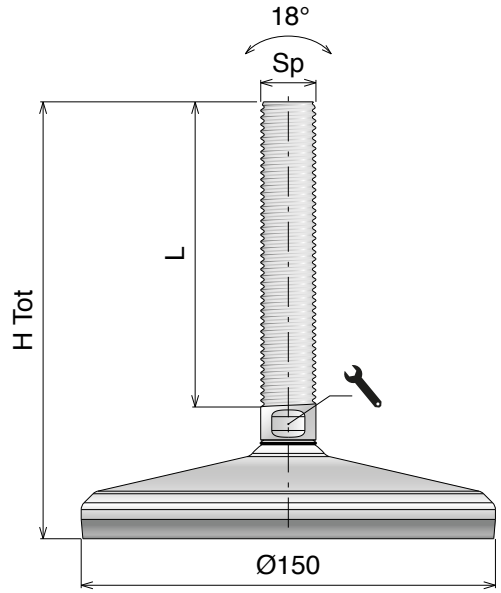

Ø150
DIAMETER (mm)

ANTI-SLIP

Art-Nr.	Sp	H Tot (mm)	L (mm)	(mm)	Load (N)
901175	M20	100	52,3	17	45.000
901176		130	82,3	17	
901177		160	112,3	17	
901178		190	142,3	17	
901179		240	192,3	17	
901180		300	252,3	17	
901181	M24	130	76	19	45.000
901182		160	106	19	
901183		190	136	19	
901184		240	186	19	
901185		300	246	19	
901186	M30	160	106	24	45.000
901187		190	136	24	
901188		240	186	24	
901189		300	246	24	
901190		350	296	24	
901191	M36	190	136	30	45.000
901192		240	186	30	
901193		300	246	30	
901194		350	296	30	

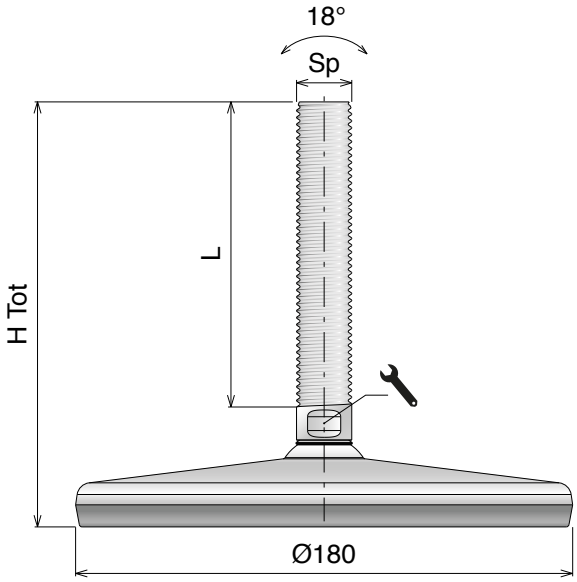

Ø180
DIAMETER (mm)

ANTI-SLIP

Art-Nr.	Sp	H Tot (mm)	L (mm)	(mm)	Load (N)
901195	M20	95,7	52,3	17	38.000
901196		125,7	82,3	17	
901197		155,7	112,3	17	
901198		185,7	142,3	17	
901199		235,7	192,3	17	
901200		295,7	252,3	17	
901201	M24	125,7	76	19	38.000
901202		155,7	106	19	
901203		185,7	136	19	
901204		235,7	186	19	
901205		295,7	246	19	
901206	M30	155,7	106	24	38.000
901207		185,7	136	24	
901208		235,7	186	24	
901209		295,7	246	24	
901210		345,7	296	24	
901211	M36	185,7	136	30	38.000
901212		235,7	186	30	
901213		295,7	246	30	
901214		345,7	296	30	

Core product range of Easy Clean Levelling Feet can be found here.

On request vulcanized rubber can be provided white or blue and spindle can be made in AISI 316.

Materiale / *Material* / *Materialien:*
Base, stelo e rondella: Acciaio inox
Base plate, spindle and washer: Stainless steel
Fussplatte, Spindel und Scheibe: Edelstahl

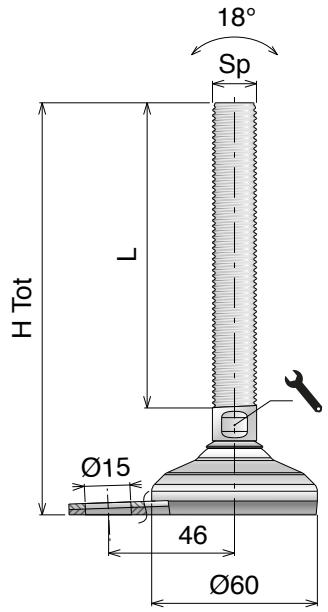

Ø60
DIAMETER (mm) — x1 FIXING POINT — ANTI-SLIP

Art-Nr.	Sp	H Tot (mm)	L (mm)	(mm)	Load (N)
901215	M10	90	50,5	8	3.000
901216		120	80,5	8	
901217		150	110,5	8	
901218	M12	90	50,8	10	4.500
901219		120	80,8	10	
901220		150	110,8	10	
901221		180	140,8	10	
901222	M16	90	51,3	13	4.500
901223		120	81,3	13	
901224		150	111,3	13	
901225		180	141,3	13	
901226		230	191,3	13	
901227	M20	90	52,3	17	4.500
901228		120	82,3	17	
901229		150	112,3	17	
901230		180	142,3	17	
901231		230	192,3	17	
901232		290	252,3	17	

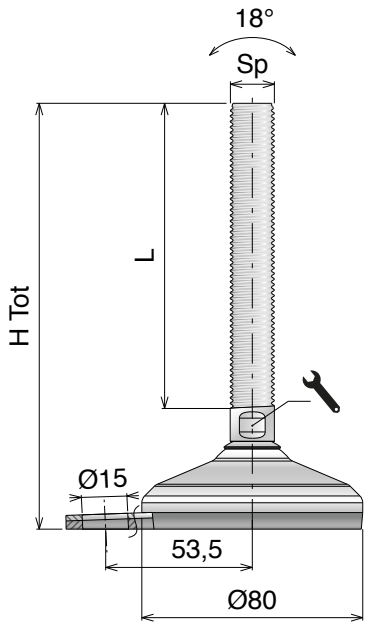

Ø80
DIAMETER (mm) — x1 FIXING POINT — ANTI-SLIP

Art-Nr.	Sp	H Tot (mm)	L (mm)	(mm)	Load (N)
901258	M12	95	50,8	10	12.000
901259		125	80,8	10	
901260		155	110,8	10	
901261		185	140,8	10	
901262	M16	95	51,3	13	15.000
901263		125	81,3	13	
901264		155	111,3	13	
901265		185	141,3	13	
901266		235	191,3	13	
901267	M20	95	52,3	17	15.000
901268		125	82,3	17	
901269		155	112,3	17	
901270		185	142,3	17	
901271		235	192,3	17	
901272		295	252,3	17	
901273	M24	125	76	19	15.000
901274		155	106	19	
901275		185	136	19	
901276		235	186	19	
901277		295	246	19	
901278	M30	155	106	24	15.000
901279		185	136	24	
901280		235	186	24	
901281		295	246	24	
901282		345	296	24	

Core product range of Easy Clean Levelling Feet can be found here.

Oadby Core product range
Oadby Available from stock in Leicester
Easy Available from stock in Italy
Standard Produced to order in Italy

Movex®

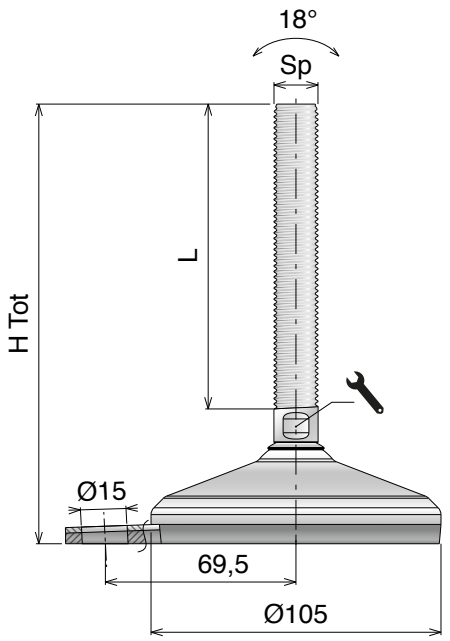

Ø105

DIAMETER (mm) — FIXING POINT x1 — ANTI-SLIP

Art-Nr.	Sp	H Tot (mm)	L (mm)	(mm)	Load (N)
901308	M16	100	51,3	13	25.000
901309		130	81,3	13	
901310		160	111,3	13	
901311		190	141,3	13	
901312		240	191,3	13	
901313	M20	100	52,3	17	25.000
901314		130	82,3	17	
901315		160	112,3	17	
901316		190	142,3	17	
901317		240	192,3	17	
901318		300	252,3	17	
901319	M24	130	76	19	25.000
901320		160	106	19	
901321		190	136	19	
901322		240	186	19	
901323		300	246	19	
901324	M30	160	106	24	25.000
901325		190	136	24	
901326		240	186	24	
901327		300	246	24	
901328		350	296	24	
901329	M36	190	136	30	25.000
901330		240	186	30	
901331		300	246	30	
901332		350	296	30	

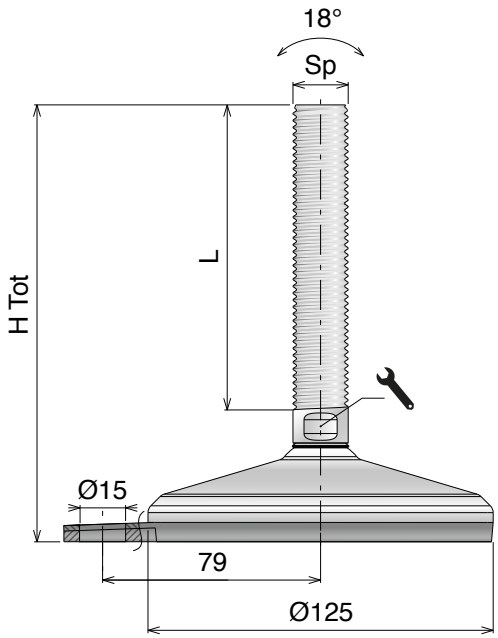

Ø125

DIAMETER (mm) — FIXING POINT x1 — ANTI-SLIP

Art-Nr.	Sp	H Tot (mm)	L (mm)	(mm)	Load (N)
901333	M20	100	52,3	17	30.000
901334		130	82,3	17	
901335		160	112,3	17	
901336		190	142,3	17	
901337		240	192,3	17	
901338		300	252,3	17	
901339	M24	130	76	19	30.000
901340		160	106	19	
901341		190	136	19	
901342		240	186	19	
901343		300	246	19	
901344	M30	160	106	24	30.000
901345		190	136	24	
901346		240	186	24	
901347		300	246	24	
901348		350	296	24	
901349	M36	190	136	30	30.000
901350		240	186	30	
901351		300	246	30	
901352		350	296	30	

Core product range of Easy Clean Levelling Feet can be found here.

S400 SPLIT

Piedi di livellamento / *Leveling feet* / *Nivellierfüße*

On request vulcanized rubber can be provided white or blue and spindle can be made in AISI 316.

Materiale / *Material* / *Materialien:*
Base, stelo e rondella: Acciaio inox
Base plate, spindle and washer: Stainless steel
Fussplatte, Spindel und Scheibe: Edelstahl

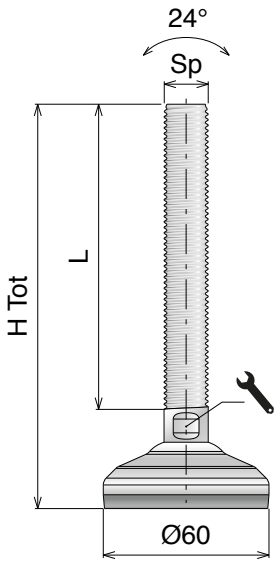

Ø60

DIAMETER (mm) — ANTI-SLIP — SLIT VERSION

Art-Nr.	Sp	H Tot (mm)	L (mm)	(mm)	Load (N)
901353	M10	89	50,5	8	3.000
901354		119	80,5	8	
901355		149	110,5	8	
901356	M12	89	50,8	10	4.500
901357		119	80,8	10	
901358		149	110,8	10	
901359		179	140,8	10	
901360	M16	89	51,3	13	4.500
901361		119	81,3	13	
901362		149	111,3	13	
901363		179	141,3	13	
901364		229	191,3	13	
901365	M20	89	52,3	17	4.500
901366		119	82,3	17	
901367		149	112,3	17	
901368		179	142,3	17	
901369		229	192,3	17	
901370		289	252,3	17	

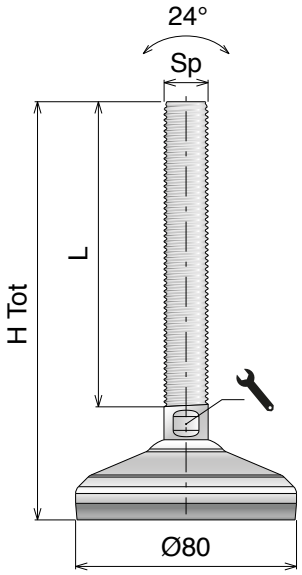

Ø80

DIAMETER (mm) — ANTI-SLIP — SLIT VERSION

Art-Nr.	Sp	H Tot (mm)	L (mm)	(mm)	Load (N)
901371	M12	94	50,8	10	12.000
901372		124	80,8	10	
901373		154	110,8	10	
901374		184	140,8	10	
901375	M16	94	51,3	13	15.000
901376		124	81,3	13	
901377		154	111,3	13	
901378		184	141,3	13	
901379		234	191,3	13	
901380	M20	94	52,3	17	15.000
901381		124	82,3	17	
901382		154	112,3	17	
901383		184	142,3	17	
901384		234	192,3	17	
901385		294	252,3	17	
901386	M24	125	76	19	15.000
901387		155	106	19	
901388		185	136	19	
901389		235	186	19	
901390		295	246	19	
901391	M30	155	106	24	15.000
901392		185	136	24	
901393		235	186	24	
901394		295	246	24	
901395		345	296	24	

Core product range of Easy Clean Levelling Feet can be found here.

Core product range
Available from stock in Leicester
Easy Available from stock in Italy
Standard Produced to order in Italy

Movex

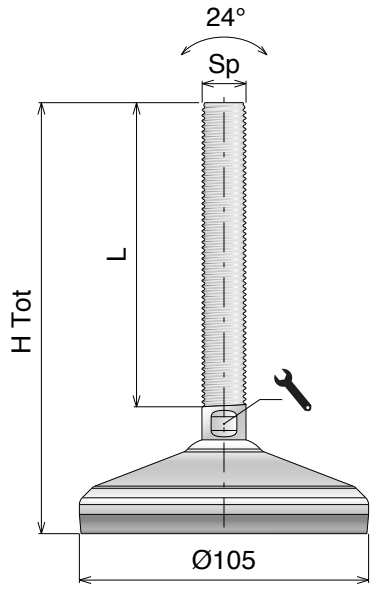

Ø105
DIAMETER (mm)

ANTI-SLIP SLIT VERSION

Art-Nr.	Sp	H Tot (mm)	L (mm)	(mm)	Load (N)
901396	M16	99	51,3	13	25.000
901397		129	81,3	13	
901398		159	111,3	13	
901399		189	141,3	13	
901400		239	191,3	13	
901401	M20	99	52,3	17	25.000
901402		129	82,3	17	
901403		159	112,3	17	
901404		189	142,3	17	
901405		239	192,3	17	
901406		299	252,3	17	
901407	M24	130	76	19	25.000
901408		160	106	19	
901409		190	136	19	
901410		240	186	19	
901411		300	246	19	
901412	M30	160	106	24	25.000
901413		190	136	24	
901414		240	186	24	
901415		300	246	24	
901416		350	296	24	
901417	M36	190	136	30	25.000
901418		240	186	30	
901419		300	246	30	
901420		350	296	30	

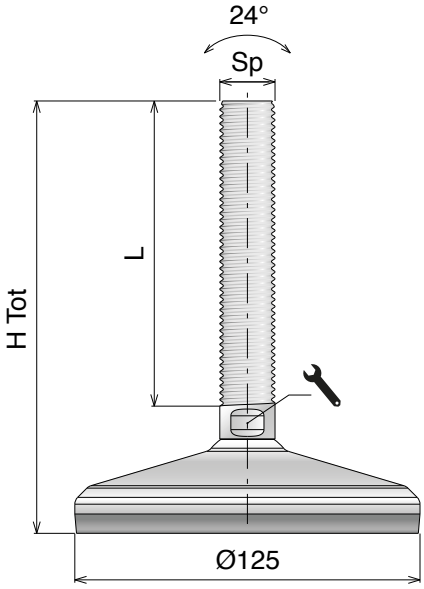

Ø125
DIAMETER (mm)

ANTI-SLIP SLIT VERSION

Art-Nr.	Sp	H Tot (mm)	L (mm)	(mm)	Load (N)
901421	M20	99	52,3	17	30.000
901422		129	82,3	17	
901423		159	112,3	17	
901424		189	142,3	17	
901425		239	192,3	17	
901426		299	252,3	17	
901427	M24	130	76	19	30.000
901428		160	106	19	
901429		190	136	19	
901430		240	186	19	
901431		300	246	19	
901432	M30	160	106	24	30.000
901433		190	136	24	
901434		240	186	24	
901435		300	246	24	
901436		350	296	24	
901437	M36	190	136	30	30.000
901438		240	186	30	
901439		300	246	30	
901440		350	296	30	

Core product range of Easy Clean Levelling Feet can be found here.

S400 SPLIT

Piedi di livellamento / *Leveling feet* / *Nivellierfüße*

On request vulcanized rubber can be provided white or blue and spindle can be made in AISI 316.

Materiale / *Material* / *Materialien:*
Base, stelo e rondella: Acciaio inox
Base plate, spindle and washer: Stainless steel
Fussplatte, Spindel und Scheibe: Edelstahl

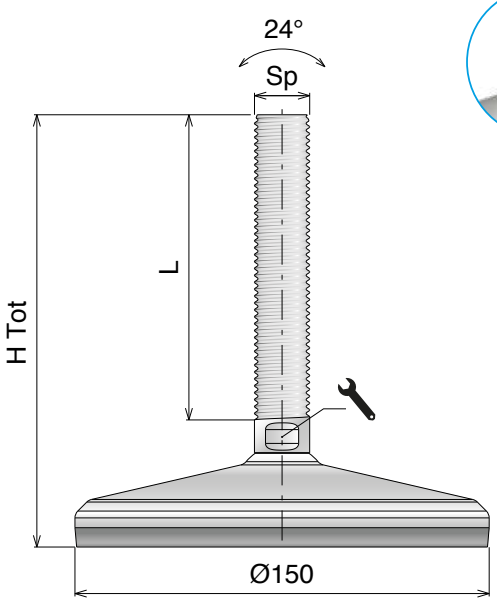

Ø150
DIAMETER (mm)

ANTI-SLIP

SLIT VERSION

Art-Nr.	Sp	H Tot (mm)	L (mm)	(mm)	Load (N)
901441	M20	99	52,3	17	45.000
901442		129	82,3	17	
901443		159	112,3	17	
901444		189	142,3	17	
901445		239	192,3	17	
901446		299	252,3	17	
901447	M24	130	76	19	45.000
901448		160	106	19	
901449		190	136	19	
901450		240	186	19	
901451		300	246	19	
901452	M30	160	106	24	45.000
901453		190	136	24	
901454		240	186	24	
901455		300	246	24	
901456		350	296	24	
901457	M36	190	136	30	45.000
901458		240	186	30	
901459		300	246	30	
901460		350	296	30	

Core product range of Easy Clean Levelling Feet can be found here.

Core product range
Available from stock in Leicester
Easy Available from stock in Italy
Standard Produced to order in Italy

Movex®

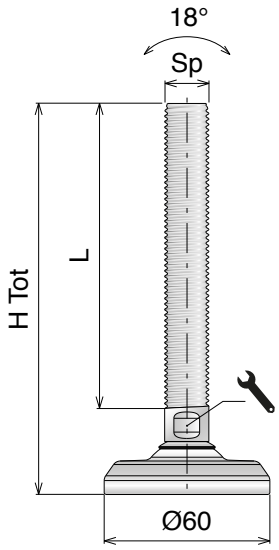

Ø60
DIAMETER (mm)

Kg
HIGH LOAD

Art-Nr.	Sp	H Tot (mm)	L (mm)	(mm)	Load (N)
901461	M10	82,5	50,5	7	3.000
901462		112,5	80,5	7	
901463		142,5	110,5	7	
901464	M12	82,5	50,8	10	12.000
901465		112,5	80,8	10	
901466		142,5	110,8	10	
901467		172,5	140,8	10	
901468	M16	82,5	51,3	13	30.000
901469		112,5	81,3	13	
901470		142,5	111,3	13	
901471		172,5	141,3	13	
901472		222,5	191,3	13	
901473	M20	82,5	52,3	17	45.000
901474		112,5	82,3	17	
901475		142,5	112,3	17	
901476		172,5	142,3	17	
901477		222,5	192,3	17	
901478		282,5	252,3	17	

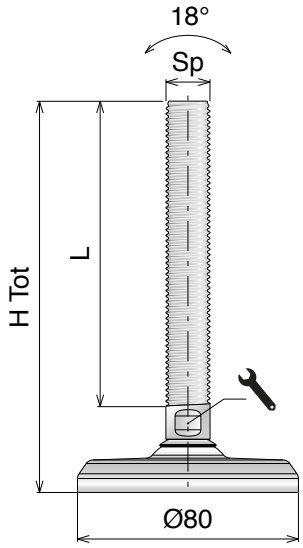

Ø80
DIAMETER (mm)

Kg
HIGH LOAD

Art-Nr.	Sp	H Tot (mm)	L (mm)	(mm)	Load (N)
901479	M12	82,5	50,8	10	12.000
901480		112,5	80,8	10	
901481		142,5	110,8	10	
901482		172,5	140,8	10	
901483	M16	82,5	51,3	13	30.000
901484		112,5	81,3	13	
901485		142,5	111,3	13	
901486		172,5	141,3	13	
901487		222,5	191,3	13	
901488	M20	82,5	52,3	17	45.000
901489		112,5	82,3	17	
901490		142,5	112,3	17	
901491		172,5	142,3	17	
901492		222,5	192,3	17	
901493		282,5	252,3	17	
901494	M24	112,5	76	19	70.000
901495		142,5	106	19	
901496		172,5	136	19	
901497		222,5	186	19	
901498		282,5	246	19	
901499	M30	142,5	106	24	80.000
901500		172,5	136	24	
901501		222,5	186	24	
901502		282,5	246	24	
901503		332,5	296	24	

Core product range of Easy Clean Levelling Feet can be found here.

S400 HEAVY

Piedi di livellamento / *Leveling feet* / *Nivellierfüße*

On request spindle can be made in AISI 316.

Materiale / *Material* / *Materialien:*
Base, stelo e rondella: Acciaio inox
Base plate, spindle and washer: Stainless steel
Fussplatte, Spindel und Scheibe: Edelstahl

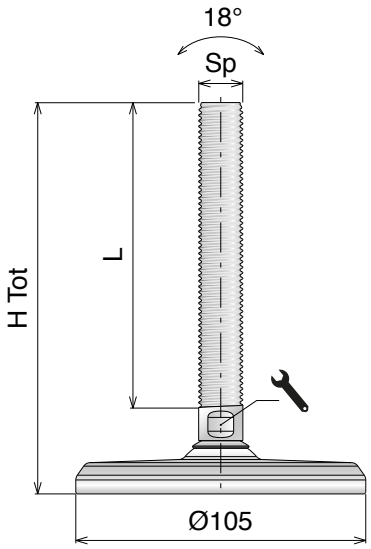

Ø105

DIAMETER (mm)

Kg
HIGH LOAD

Art-Nr.	Sp	H Tot (mm)	L (mm)	(mm)	Load (N)
901504	M16	82,5	51,3	13	30.000
901505		112,5	81,3	13	
901506		142,5	111,3	13	
901507		172,5	141,3	13	
901508		222,5	191,3	13	
901509	M20	82,5	52,3	17	45.000
901510		112,5	82,3	17	
901511		142,5	112,3	17	
901512		172,5	142,3	17	
901513		222,5	192,3	17	
901514		282,5	252,3	17	
901515	M24	112,5	76	19	70.000
901516		142,5	106	19	
901517		172,5	136	19	
901518		222,5	186	19	
901519		282,5	246	19	
901520	M30	142,5	106	24	100.000
901521		172,5	136	24	
901522		222,5	186	24	
901523		282,5	246	24	
901524		332,5	296	24	
901525	M36	172,5	136	30	120.000
901526		222,5	186	30	
901527		282,5	246	30	
901528		332,5	296	30	

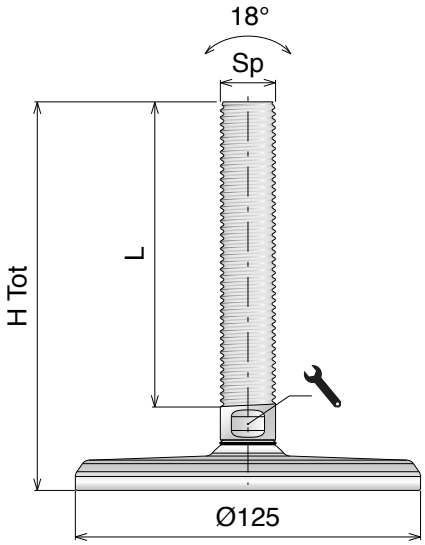

Ø125

DIAMETER (mm)

Kg
HIGH LOAD

Art-Nr.	Sp	H Tot (mm)	L (mm)	(mm)	Load (N)
901529	M20	82,5	52,3	17	45.000
901530		112,5	82,3	17	
901531		142,5	112,3	17	
901532		172,5	142,3	17	
901533		222,5	192,3	17	
901534		282,5	252,3	17	
901535	M24	112,5	76	19	70.000
901536		142,5	106	19	
901537		172,5	136	19	
901538		222,5	186	19	
901539		282,5	246	19	
901540	M30	142,5	106	24	100.000
901541		172,5	136	24	
901542		222,5	186	24	
901543		282,5	246	24	
901544		332,5	296	24	
901545	M36	172,5	136	30	130.000
901546		222,5	186	30	
901547		282,5	246	30	
901548		332,5	296	30	

Core product range of Easy Clean Levelling Feet can be found here.

Core product range
Available from stock in Leicester
Easy Available from stock in Italy
Standard Produced to order in Italy

Movex

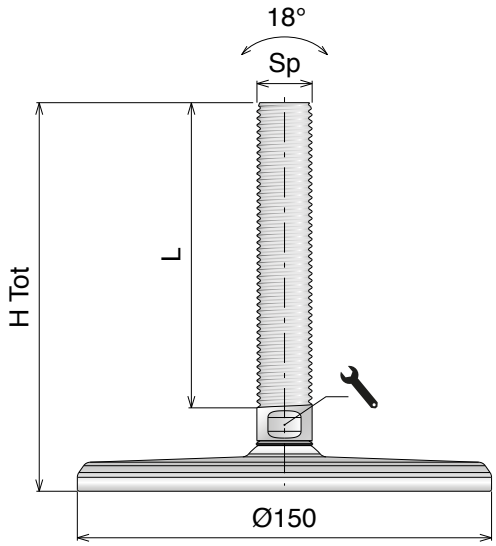

Ø150
DIAMETER (mm)

HIGH LOAD

Art-Nr.	Sp	H Tot (mm)	L (mm)	(mm)	Load (N)
901549	M20	82,5	52,3	17	45.000
901550		112,5	82,3	17	
901551		142,5	112,3	17	
901552		172,5	142,3	17	
901553		222,5	192,3	17	
901554		282,5	252,3	17	
901555	M24	112,5	76	19	70.000
901556		142,5	106	19	
901557		172,5	136	19	
901558		222,5	186	19	
901559		282,5	246	19	
901560	M30	142,5	106	24	100.000
901561		172,5	136	24	
901562		222,5	186	24	
901563		282,5	246	24	
901564		332,5	296	24	
901565	M36	172,5	136	30	150.000
901566		222,5	186	30	
901567		282,5	246	30	
901568		332,5	296	30	

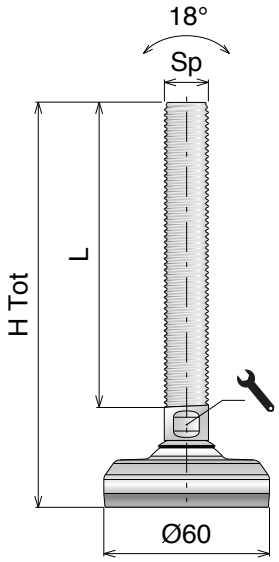

Ø60
DIAMETER (mm)

HIGH LOAD ANTI-SLIP

Art-Nr.	Sp	H Tot (mm)	L (mm)	(mm)	Load (N)
901569	M10	87,5	50,5	7	3.000
901570		117,5	80,5	7	
901571		147,5	110,5	7	
901572	M12	88,5	50,8	10	12.000
901573		118,5	80,8	10	
901574		148,5	110,8	10	
901575		178,5	140,8	10	
901576	M16	88,5	51,3	13	30.000
901577		118,5	81,3	13	
901578		148,5	111,3	13	
901579		178,5	141,3	13	
901580		228,5	191,3	13	
901581	M20	88,5	52,3	17	45.000
901582		118,5	82,3	17	
901583		148,5	112,3	17	
901584		178,5	142,3	17	
901585		228,5	192,3	17	
901586		288,5	252,3	17	

Core product range of Easy Clean Levelling Feet can be found here.

S400 HEAVY

Piedi di livellamento / *Leveling feet* / *Nivellierfüße*

On request vulcanized rubber can be provided white or blue and spindle can be made in AISI 316.

Materiale / *Material* / *Materialien:*
Base, stelo e rondella: Acciaio inox
Base plate, spindle and washer: Stainless steel
Fussplatte, Spindel und Scheibe: Edelstahl

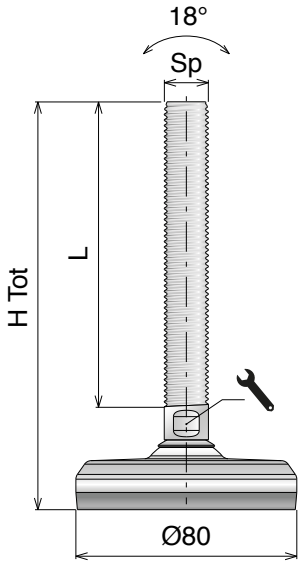

Ø80

DIAMETER (mm) — HIGH LOAD — ANTI-SLIP

Art-Nr.	Sp	H Tot (mm)	L (mm)	(mm)	Load (N)
901587	M12	88,5	50,8	10	12.000
901588		118,5	80,8	10	
901589		148,5	110,8	10	
901590		178,5	140,8	10	
901591	M16	88,5	51,3	13	30.000
901592		118,5	81,3	13	
901593		148,5	111,3	13	
901594		178,5	141,3	13	
901595		228,5	191,3	13	
901596	M20	88,5	52,3	17	45.000
901597		118,5	82,3	17	
901598		148,5	112,3	17	
901599		178,5	142,3	17	
901600		228,5	192,3	17	
901601		288,5	252,3	17	
901602	M24	118,5	76	19	70.000
901603		148,5	106	19	
901604		178,5	136	19	
901605		228,5	186	19	
901606		288,5	246	19	
901607	M30	148,5	106	24	80.000
901608		178,5	136	24	
901609		228,5	186	24	
901610		288,5	246	24	
901611		338,5	296	24	

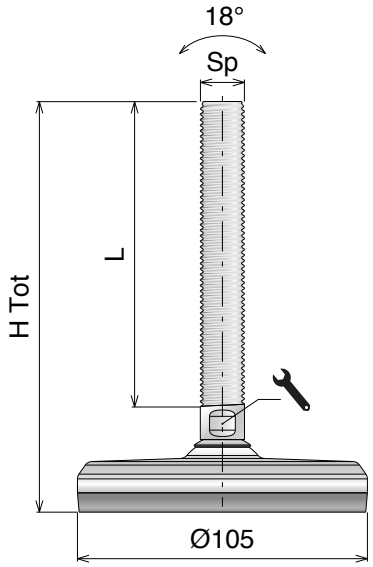

Ø105

DIAMETER (mm) — HIGH LOAD — ANTI-SLIP

Art-Nr.	Sp	H Tot (mm)	L (mm)	(mm)	Load (N)
901612	M16	88,5	51,3	13	30.000
901613		118,5	81,3	13	
901614		148,5	111,3	13	
901615		178,5	141,3	13	
901616		228,5	191,3	13	
901617	M20	88,5	52,3	17	45.000
901618		118,5	82,3	17	
901619		148,5	112,3	17	
901620		178,5	142,3	17	
901621		228,5	192,3	17	
901622		288,5	252,3	17	
901623	M24	118,5	76	19	70.000
901624		148,5	106	19	
901625		178,5	136	19	
901626		228,5	186	19	
901627		288,5	246	19	
901628	M30	148,5	106	24	100.000
901629		178,5	136	24	
901630		228,5	186	24	
901631		288,5	246	24	
901632		338,5	296	24	
901633	M36	178,5	136	30	120.000
901634		228,5	186	30	
901635		288,5	246	30	
901636		338,5	296	30	

Core product range of Easy Clean Levelling Feet can be found here.

Core product range
Available from stock in Leicester
Easy Available from stock in Italy
Standard Produced to order in Italy

Movex

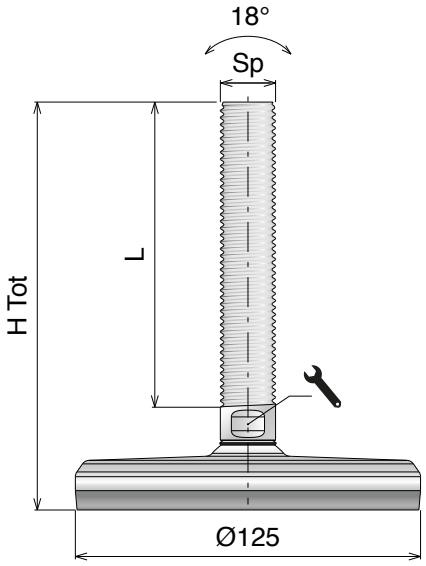

Ø125
DIAMETER (mm) — HIGH LOAD — ANTI-SLIP

Art-Nr.	Sp	H Tot (mm)	L (mm)	(mm)	Load (N)
901637	M20	88,5	52,3	17	45.000
901638		118,5	82,3	17	
901639		148,5	112,3	17	
901640		178,5	142,3	17	
901641		228,5	192,3	17	
901642		288,5	252,3	17	
901643	M24	118,5	76	19	70.000
901644		148,5	106	19	
901645		178,5	136	19	
901646		228,5	186	19	
901647		288,5	246	19	
901648	M30	148,5	106	24	100.000
901649		178,5	136	24	
901650		228,5	186	24	
901651		288,5	246	24	
901652		338,5	296	24	
901653	M36	178,5	136	30	130.000
901654		228,5	186	30	
901655		288,5	246	30	
901656		338,5	296	30	

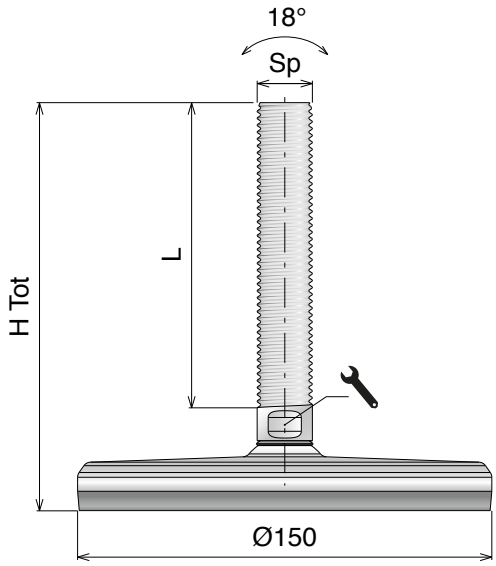

Ø150
DIAMETER (mm) — HIGH LOAD — ANTI-SLIP

Art-Nr.	Sp	H Tot (mm)	L (mm)	(mm)	Load (N)
901657	M20	88,5	52,3	17	45.000
901658		118,5	82,3	17	
901659		148,5	112,3	17	
901660		178,5	142,3	17	
901661		228,5	192,3	17	
901662		288,5	252,3	17	
901663	M24	118,5	76	19	70.000
901664		148,5	106	19	
901665		178,5	136	19	
901666		228,5	186	19	
901667		288,5	246	19	
901668	M30	148,5	106	24	100.000
901669		178,5	136	24	
901670		228,5	186	24	
901671		288,5	246	24	
901672		338,5	296	24	
901673	M36	178,5	136	30	150.000
901674		228,5	186	30	
901675		288,5	246	30	
901676		338,5	296	30	

Core product range of Easy Clean Levelling Feet can be found here.

On request spindle can be made in AISI 316.

Materiale / *Material* / *Materialien:*
Base, stelo e rondella: Acciaio inox
Base plate, spindle and washer: Stainless steel
Fussplatte, Spindel und Scheibe: Edelstahl

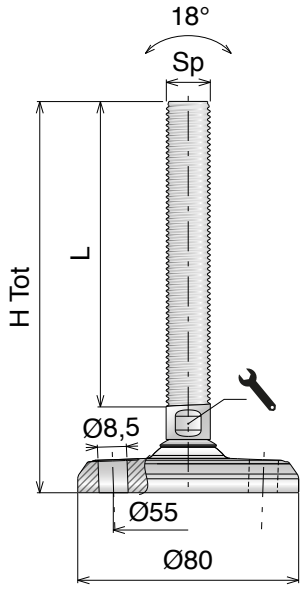

Ø80
DIAMETER (mm) — HIGH LOAD — FIXING POINT (x2)

Art-Nr.	Sp	H Tot (mm)	L (mm)	(mm)	Load (N)
901695	M12	82,5	50,8	10	12.000
901696		112,5	80,8	10	
901697		142,5	110,8	10	
901698		172,5	140,8	10	
901699	M16	82,5	51,3	13	30.000
901700		112,5	81,3	13	
901701		142,5	111,3	13	
901702		172,5	141,3	13	
901703		222,5	191,3	13	
901704	M20	82,5	52,3	17	45.000
901705		112,5	82,3	17	
901706		142,5	112,3	17	
901707		172,5	142,3	17	
901708		222,5	192,3	17	
901709		282,5	252,3	17	
901710	M24	112,5	76	19	70.000
901711		142,5	106	19	
901712		172,5	136	19	
901713		222,5	186	19	
901714		282,5	246	19	
901715	M30	142,5	106	24	80.000
901716		172,5	136	24	
901717		222,5	186	24	
901718		282,5	246	24	
901719		332,5	296	24	

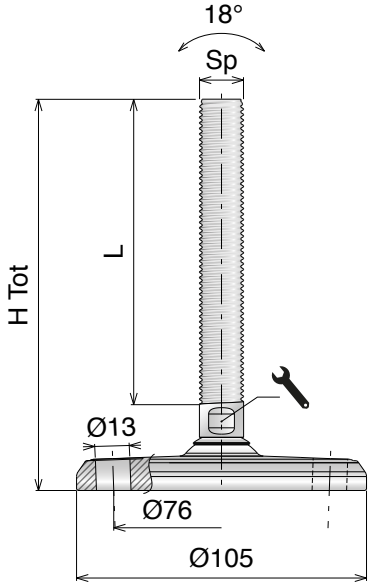

Ø105
DIAMETER (mm) — HIGH LOAD — FIXING POINT (x2)

Art-Nr.	Sp	H Tot (mm)	L (mm)	(mm)	Load (N)
901720	M16	82,5	51,3	13	30.000
901721		112,5	81,3	13	
901722		142,5	111,3	13	
901723		172,5	141,3	13	
901724		222,5	191,3	13	
901725	M20	82,5	52,3	17	45.000
901726		112,5	82,3	17	
901727		142,5	112,3	17	
901728		172,5	142,3	17	
901729		222,5	192,3	17	
901730		282,5	252,3	17	
901731	M24	112,5	76	19	70.000
901732		142,5	106	19	
901733		172,5	136	19	
901734		222,5	186	19	
901735		282,5	246	19	
901736	M30	142,5	106	24	100.000
901737		172,5	136	24	
901738		222,5	186	24	
901739		282,5	246	24	
901740		332,5	296	24	
901741	M36	172,5	136	30	120.000
901742		222,5	186	30	
901743		282,5	246	30	
901744		332,5	296	30	

Core product range of Easy Clean Levelling Feet can be found here.

Core product range
Available from stock in Leicester
Easy Available from stock in Italy
Standard Produced to order in Italy

Movex®

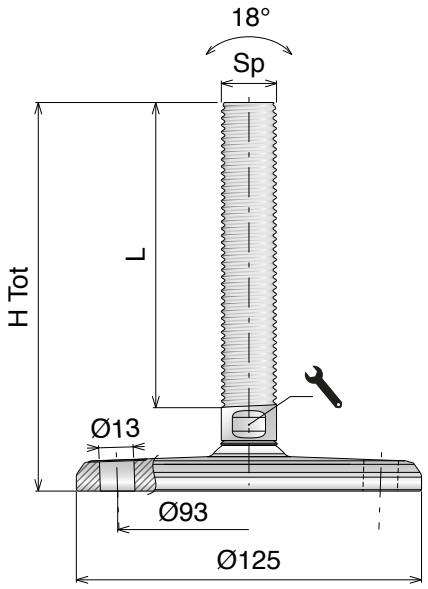

Ø125

DIAMETER (mm) — HIGH LOAD — x2 FIXING POINT

Art-Nr.	Sp	H Tot (mm)	L (mm)	(mm)	Load (N)
901745	M20	82,5	52,3	17	45.000
901746		112,5	82,3	17	
901747		142,5	112,3	17	
901748		172,5	142,3	17	
901749		222,5	192,3	17	
901750		282,5	252,3	17	
901751	M24	112,5	76	19	70.000
901752		142,5	106	19	
901753		172,5	136	19	
901754		222,5	186	19	
901755		282,5	246	19	
901756	M30	142,5	106	24	100.000
901757		172,5	136	24	
901758		222,5	186	24	
901759		282,5	246	24	
901760		332,5	296	24	
901761	M36	172,5	136	30	130.000
901762		222,5	186	30	
901763		282,5	246	30	
901764		332,5	296	30	

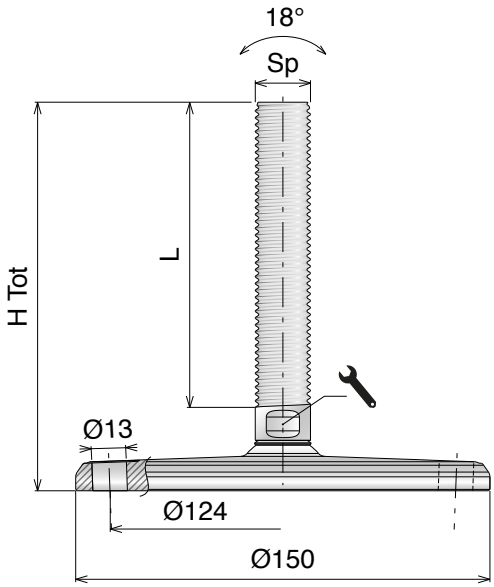

Ø150

DIAMETER (mm) — HIGH LOAD — x2 FIXING POINT

Art-Nr.	Sp	H Tot (mm)	L (mm)	(mm)	Load (N)
901765	M20	82,5	52,3	17	45.000
901766		112,5	82,3	17	
901767		142,5	112,3	17	
901768		172,5	142,3	17	
901769		222,5	192,3	17	
901770		282,5	252,3	17	
901771	M24	112,5	76	19	70.000
901772		142,5	106	19	
901773		172,5	136	19	
901774		222,5	186	19	
901775		282,5	246	19	
901776	M30	142,5	106	24	100.000
901777		172,5	136	24	
901778		222,5	186	24	
901779		282,5	246	24	
901780		332,5	296	24	
901781	M36	172,5	136	30	150.000
901782		222,5	186	30	
901783		282,5	246	30	
901784		332,5	296	30	

Core product range of Easy Clean Levelling Feet can be found here.

S400 HEAVY

Piedi di livellamento / *Leveling feet* / *Nivellierfüße*

On request vulcanized rubber can be provided white or blue and spindle can be made in AISI 316.

Materiale / *Material* / *Materialien:*
Base, stelo e rondella: Acciaio inox
Base plate, spindle and washer: Stainless steel
Fussplatte, Spindel und Scheibe: Edelstahl

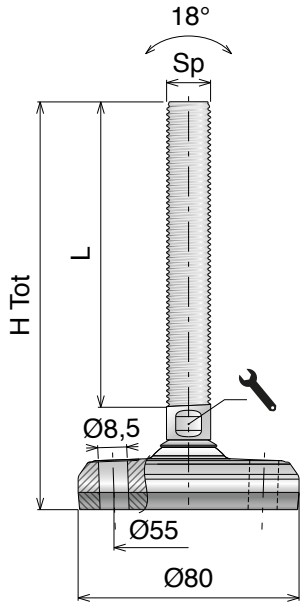

Ø80 DIAMETER (mm) | Kg HIGH LOAD | X2 FIXING POINT | ANTI-SLIP

Art-Nr.	Sp	H Tot (mm)	L (mm)	(mm)	Load (N)
901803	M12	88,5	50,8	10	12.000
901804		118,5	80,8	10	
901805		148,5	110,8	10	
901806		178,5	140,8	10	
901807	M16	88,5	51,3	13	30.000
901808		118,5	81,3	13	
901809		148,5	111,3	13	
901810		178,5	141,3	13	
901811		228,5	191,3	13	
901812	M20	88,5	52,3	17	45.000
901813		118,5	82,3	17	
901814		148,5	112,3	17	
901815		178,5	142,3	17	
901816		228,5	192,3	17	
901817		288,5	252,3	17	
901818	M24	118,5	76	19	70.000
901819		148,5	106	19	
901820		178,5	136	19	
901821		228,5	186	19	
901822		288,5	246	19	
901823	M30	148,5	106	24	80.000
901824		178,5	136	24	
901825		228,5	186	24	
901826		288,5	246	24	
901827		338,5	296	24	

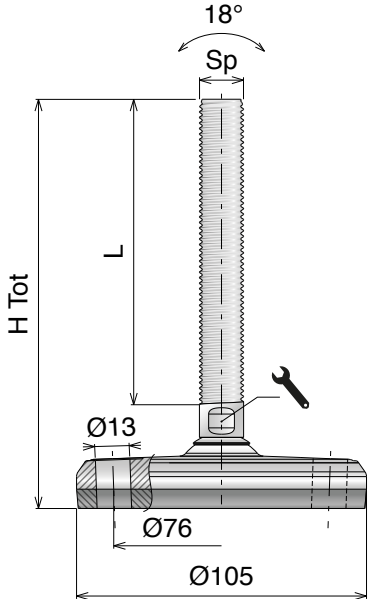

Ø105 DIAMETER (mm) | Kg HIGH LOAD | X2 FIXING POINT | ANTI-SLIP

Art-Nr.	Sp	H Tot (mm)	L (mm)	(mm)	Load (N)
901828	M16	88,5	51,3	13	30.000
901829		118,5	81,3	13	
901830		148,5	111,3	13	
901831		178,5	141,3	13	
901832		228,5	191,3	13	
901833	M20	88,5	52,3	17	45.000
901834		118,5	82,3	17	
901835		148,5	112,3	17	
901836		178,5	142,3	17	
901837		228,5	192,3	17	
901838		288,5	252,3	17	
901839	M24	118,5	76	19	70.000
901840		148,5	106	19	
901841		178,5	136	19	
901842		228,5	186	19	
901843		288,5	246	19	
901844	M30	148,5	106	24	100.000
901845		178,5	136	24	
901846		228,5	186	24	
901847		288,5	246	24	
901848		338,5	296	24	
901849	M36	178,5	136	30	120.000
901850		228,5	186	30	
901851		288,5	246	30	
901852		338,5	296	30	

Core product range of Easy Clean Levelling Feet can be found here.

Core product range
Available from stock in Leicester
Easy Available from stock in Italy
Standard Produced to order in Italy

Movex

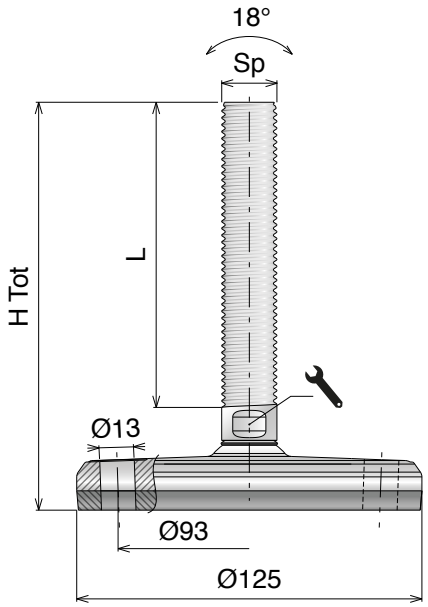

Ø125 DIAMETER (mm) | Kg HIGH LOAD | x2 FIXING POINT | ANTI-SLIP

Art-Nr.	Sp	H Tot (mm)	L (mm)	(mm)	Load (N)
901853	M20	88,5	52,3	17	45.000
901854		118,5	82,3	17	
901855		148,5	112,3	17	
901856		178,5	142,3	17	
901857		228,5	192,3	17	
901858		288,5	252,3	17	
901859	M24	118,5	76	19	70.000
901860		148,5	106	19	
901861		178,5	136	19	
901862		228,5	186	19	
901863		288,5	246	19	
901864	M30	148,5	106	24	100.000
901865		178,5	136	24	
901866		228,5	186	24	
901867		288,5	246	24	
901868		338,5	296	24	
901869	M36	178,5	136	30	130.000
901870		228,5	186	30	
901871		288,5	246	30	
901872		338,5	296	30	

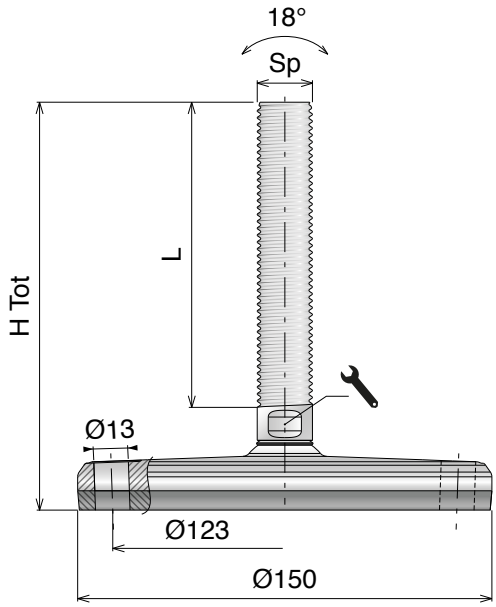

Ø150 DIAMETER (mm) | Kg HIGH LOAD | x2 FIXING POINT | ANTI-SLIP

Art-Nr.	Sp	H Tot (mm)	L (mm)	(mm)	Load (N)
901873	M20	88,5	52,3	17	45.000
901874		118,5	82,3	17	
901875		148,5	112,3	17	
901876		178,5	142,3	17	
901877		228,5	192,3	17	
901878		288,5	252,3	17	
901879	M24	118,5	76	19	70.000
901880		148,5	106	19	
901881		178,5	136	19	
901882		228,5	186	19	
901883		288,5	246	19	
901884	M30	148,5	106	24	100.000
901885		178,5	136	24	
901886		228,5	186	24	
901887		288,5	246	24	
901888		338,5	296	24	
901889	M36	178,5	136	30	150.000
901890		228,5	186	30	
901891		288,5	246	30	
901892		338,5	296	30	

Core product range of Easy Clean Levelling Feet can be found here.

S400 HEAVY-SPLIT

Piedi di livellamento / *Leveling feet* / *Nivellierfüße*

On request spindle can be made in AISI 316.

Materiale / *Material* / *Materialien:*
Base e stelo: Acciaio inox
Base plate and spindle: Stainless steel
Fussplatte und Spindel: Edelstahl

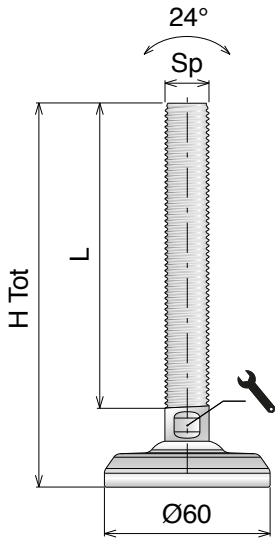

Ø60

DIAMETER (mm)

HIGH LOAD — SLIT VERSION

Art-Nr.	Sp	H Tot (mm)	L (mm)	(mm)	Load (N)
901893	M10	81,5	50,5	7	3.000
901894		111,5	80,5	7	
901895		141,5	110,5	7	
901896	M12	81,5	50,8	10	12.000
901897		111,5	80,8	10	
901898		141,5	110,8	10	
901899		171,5	140,8	10	
901900	M16	81,5	51,3	13	30.000
901901		111,5	81,3	13	
901902		141,5	111,3	13	
901903		171,5	141,3	13	
901904		221,5	191,3	13	
901905	M20	81,5	52,3	17	45.000
901906		111,5	82,3	17	
901907		141,5	112,3	17	
901908		171,5	142,3	17	
901909		221,5	192,3	17	
901910		281,5	252,3	17	

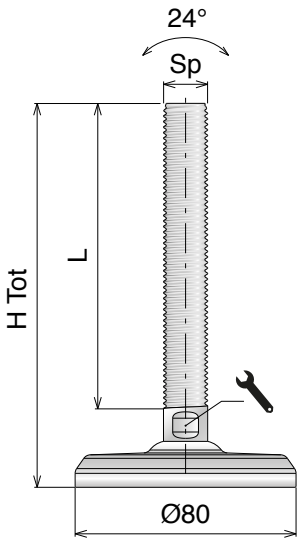

Ø80

DIAMETER (mm)

HIGH LOAD — SLIT VERSION

Art-Nr.	Sp	H Tot (mm)	L (mm)	(mm)	Load (N)
901911	M12	81,5	50,8	10	12.000
901912		111,5	80,8	10	
901913		141,5	110,8	10	
901914		171,5	140,8	10	
901915	M16	81,5	51,3	13	30.000
901916		111,5	81,3	13	
901917		141,5	111,3	13	
901918		171,5	141,3	13	
901919		221,5	191,3	13	
901920	M20	81,5	52,3	17	45.000
901921		111,5	82,3	17	
901922		141,5	112,3	17	
901923		171,5	142,3	17	
901924		221,5	192,3	17	
901925		281,5	252,3	17	
901926	M24	111,5	76	19	70.000
901927		141,5	106	19	
901928		171,5	136	19	
901929		221,5	186	19	
901930		281,5	246	19	
901931	M30	141,5	106	24	80.000
901932		171,5	136	24	
901933		221,5	186	24	
901934		281,5	246	24	
901935		331,5	296	24	

Core product range of Easy Clean Levelling Feet can be found here.

Core product range
Available from stock in Leicester
Easy Available from stock in Italy
Standard Produced to order in Italy

Movex

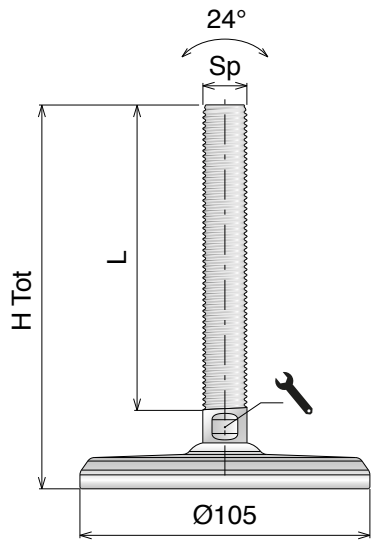

Ø105
DIAMETER (mm)

HIGH LOAD — SLIT VERSION

Art-Nr.	Sp	H Tot (mm)	L (mm)	(mm)	Load (N)
901936	M16	81,5	51,3	13	30.000
901937		111,5	81,3	13	
901938		141,5	111,3	13	
901939		171,5	141,3	13	
901940		221,5	191,3	13	
901941	M20	81,5	52,3	17	45.000
901942		111,5	82,3	17	
901943		141,5	112,3	17	
901944		171,5	142,3	17	
901945		221,5	192,3	17	
901946		281,5	252,3	17	
901947	M24	111,5	76	19	70.000
901948		141,5	106	19	
901949		171,5	136	19	
901950		221,5	186	19	
901951		281,5	246	19	
901952	M30	141,5	106	24	100.000
901953		171,5	136	24	
901954		221,5	186	24	
901955		281,5	246	24	
901956		331,5	296	24	
901957	M36	171,5	136	30	120.000
901958		221,5	186	30	
901959		281,5	246	30	
901960		331,5	296	30	

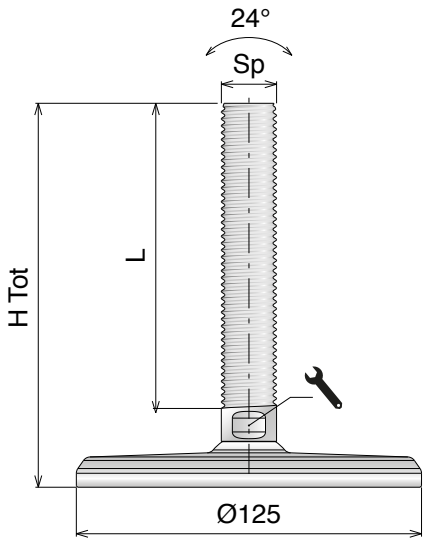

Ø125
DIAMETER (mm)

HIGH LOAD — SLIT VERSION

Art-Nr.	Sp	H Tot (mm)	L (mm)	(mm)	Load (N)
901961	M20	81,5	52,3	17	45.000
901962		111,5	82,3	17	
901963		141,5	112,3	17	
901964		171,5	142,3	17	
901965		221,5	192,3	17	
901966		281,5	252,3	17	
901967	M24	111,5	76	19	70.000
901968		141,5	106	19	
901969		171,5	136	19	
901970		221,5	186	19	
901971		281,5	246	19	
901972	M30	141,5	106	24	100.000
901973		171,5	136	24	
901974		221,5	186	24	
901975		281,5	246	24	
901976		331,5	296	24	
901977	M36	171,5	136	30	130.000
901978		221,5	186	30	
901979		281,5	246	30	
901980		331,5	296	30	

Core product range of Easy Clean Levelling Feet can be found here.

S400 HEAVY-SPLIT

Piedi di livellamento / *Leveling feet* / *Nivellierfüße*

On request vulcanized rubber can be provided white or blue and spindle can be made in AISI 316.

Materiale / *Material* / *Materialien:*
Base e stelo: Acciaio inox
Base plate and spindle: Stainless steel
Fussplatte und Spindel: Edelstahl

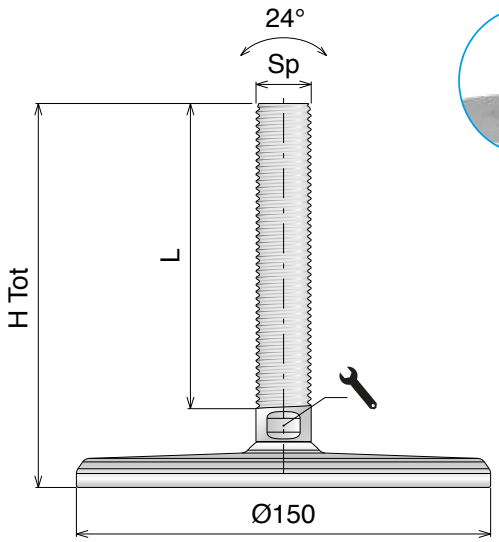

Ø150

DIAMETER (mm) — HIGH LOAD — SLIT VERSION

Art-Nr.	Sp	H Tot (mm)	L (mm)	(mm)	Load (N)
901981	M20	81,5	52,3	17	45.000
901982		111,5	82,3	17	
901983		141,5	112,3	17	
901984		171,5	142,3	17	
901985		221,5	192,3	17	
901986		281,5	252,3	17	
901987	M24	111,5	76	19	70.000
901988		141,5	106	19	
901989		171,5	136	19	
901990		221,5	186	19	
901991		281,5	246	19	
901992	M30	141,5	106	24	100.000
901993		171,5	136	24	
901994		221,5	186	24	
901995		281,5	246	24	
901996		331,5	296	24	
901997	M36	171,5	136	30	150.000
901998		221,5	186	30	
901999		281,5	246	30	
902000		331,5	296	30	

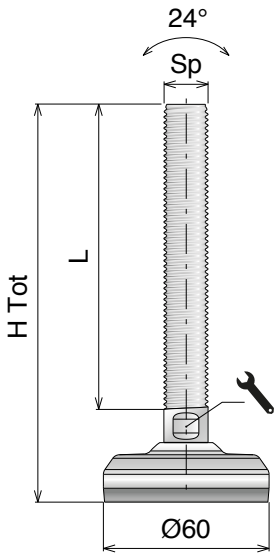

Ø60

DIAMETER (mm) — HIGH LOAD — SLIT VERSION — ANTI-SLIP

Art-Nr.	Sp	H Tot (mm)	L (mm)	(mm)	Load (N)
902001	M10	86,5	50,5	7	3.000
902002		116,5	80,5	7	
902003		146,5	110,5	7	
902004	M12	87,5	50,8	10	12.000
902005		117,5	80,8	10	
902006		147,5	110,8	10	
902007		177,5	140,8	10	
902008	M16	87,5	51,3	13	30.000
902009		117,5	81,3	13	
902010		147,5	111,3	13	
902011		177,5	141,3	13	
902012		227,5	191,3	13	
902013	M20	87,5	52,3	17	45.000
902014		117,5	82,3	17	
902015		147,5	112,3	17	
902016		177,5	142,3	17	
902017		227,5	192,3	17	
902018		287,5	252,3	17	

Core product range of Easy Clean Levelling Feet can be found here.

Core product range
Available from stock in Leicester
Easy Available from stock in Italy
Standard Produced to order in Italy

Movex

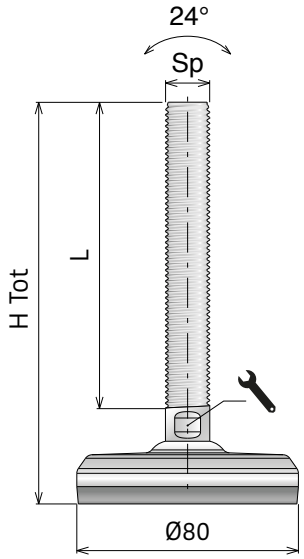

Ø80 DIAMETER (mm) — Kg HIGH LOAD — SLIT VERSION — ANTI-SLIP

Art-Nr.	Sp	H Tot (mm)	L (mm)	(mm)	Load (N)
902019	M12	87,5	50,8	10	12.000
902020		117,5	80,8	10	
902021		147,5	110,8	10	
902022		177,5	140,8	10	
902023	M16	87,5	51,3	13	30.000
902024		117,5	81,3	13	
902025		147,5	111,3	13	
902026		177,5	141,3	13	
902027		227,5	191,3	13	
902028	M20	87,5	52,3	17	45.000
902029		117,5	82,3	17	
902030		147,5	112,3	17	
902031		177,5	142,3	17	
902032		227,5	192,3	17	
902033		287,5	252,3	17	
902034	M24	117,5	76	19	70.000
902035		147,5	106	19	
902036		177,5	136	19	
902037		227,5	186	19	
902038		287,5	246	19	
902039	M30	147,5	106	24	80.000
902040		177,5	136	24	
902041		227,5	186	24	
902042		287,5	246	24	
902043		337,5	296	24	

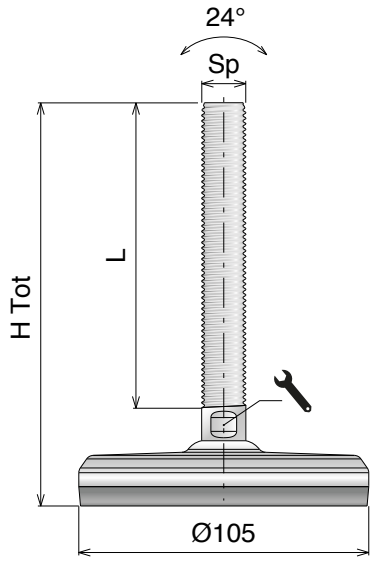

Ø105 DIAMETER (mm) — Kg HIGH LOAD — SLIT VERSION — ANTI-SLIP

Art-Nr.	Sp	H Tot (mm)	L (mm)	(mm)	Load (N)
902044	M16	87,5	51,3	13	30.000
902045		117,5	81,3	13	
902046		147,5	111,3	13	
902047		177,5	141,3	13	
902048		227,5	191,3	13	
902049	M20	87,5	52,3	17	45.000
902050		117,5	82,3	17	
902051		147,5	112,3	17	
902052		177,5	142,3	17	
902053		227,5	192,3	17	
902054		287,5	252,3	17	
902055	M24	117,5	76	19	70.000
902056		147,5	106	19	
902057		177,5	136	19	
902058		227,5	186	19	
902059		287,5	246	19	
902060	M30	147,5	106	24	100.000
902061		177,5	136	24	
902062		227,5	186	24	
902063		287,5	246	24	
902064		337,5	296	24	
902065	M36	177,5	136	30	120.000
902066		227,5	186	30	
902067		287,5	246	30	
902068		337,5	296	30	

Core product range of Easy Clean Levelling Feet can be found here.

S400 HEAVY-SPLIT

Piedi di livellamento / *Leveling feet* / *Nivellierfüße*

On request vulcanized rubber can be provided white or blue and spindle can be made in AISI 316.

Materiale / *Material* / *Materialien:*
Base e stelo: Acciaio inox
Base plate and spindle: Stainless steel
Fussplatte und Spindel: Edelstahl

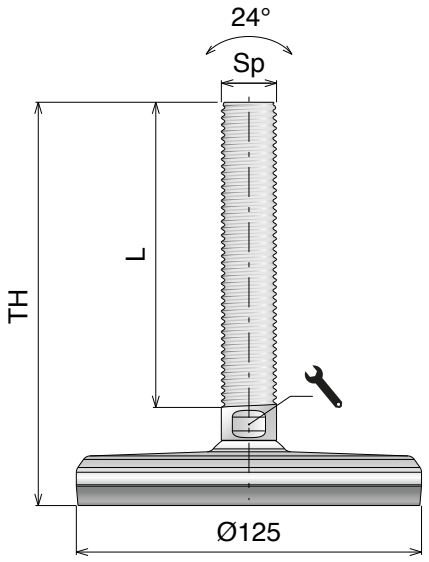

Ø125 DIAMETER (mm) | Kg HIGH LOAD | SLIT VERSION | ANTI-SLIP

Art-Nr.	Sp	H Tot (mm)	L (mm)	(mm)	Load (N)
902069	M20	87,5	52,3	17	45.000
902070		117,5	82,3	17	
902071		147,5	112,3	17	
902072		177,5	142,3	17	
902073		227,5	192,3	17	
902074		287,5	252,3	17	
902075	M24	117,5	76	19	70.000
902076		147,5	106	19	
902077		177,5	136	19	
902078		227,5	186	19	
902079		287,5	246	19	
902080	M30	147,5	106	24	100.000
902081		177,5	136	24	
902082		227,5	186	24	
902083		287,5	246	24	
902084		337,5	296	24	
902085	M36	177,5	136	30	130.000
902086		227,5	186	30	
902087		287,5	246	30	
902088		337,5	296	30	

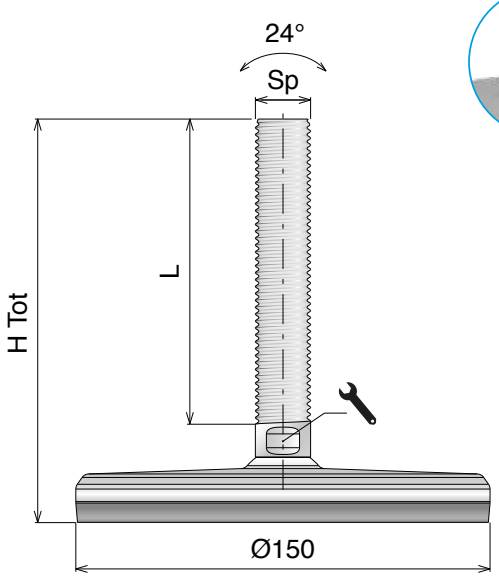

Ø150 DIAMETER (mm) | Kg HIGH LOAD | SLIT VERSION | ANTI-SLIP

Art-Nr.	Sp	H Tot (mm)	L (mm)	(mm)	Load (N)
902089	M20	87,5	52,3	17	45.000
902090		117,5	82,3	17	
902091		147,5	112,3	17	
902092		177,5	142,3	17	
902093		227,5	192,3	17	
902094		287,5	252,3	17	
902095	M24	117,5	76	19	70.000
902096		147,5	106	19	
902097		177,5	136	19	
902098		227,5	186	19	
902099		287,5	246	19	
902100	M30	147,5	106	24	100.000
902101		177,5	136	24	
902102		227,5	186	24	
902103		287,5	246	24	
902104		337,5	296	24	
902105	M36	177,5	136	30	150.000
902106		227,5	186	30	
902107		287,5	246	30	
902108		337,5	296	30	

Core product range of Easy Clean Levelling Feet can be found here.

Core product range
Available from stock in Leicester
Easy Available from stock in Italy
Standard Produced to order in Italy

Movex

S400B Series HYGIENIC STAINLESS STEEL LEVELERS

RANGE EXTENSION

Delivery: Easy Standard

S400B

Main features:
- Overmolded baseplate in AISI 304
- Spindle and cover in AISI 304
- Washer in AISI 304
- Vulcanized anti-slip NBR rubber

Versions available:
- with single floor fixation

S400B SPLIT

Main features:
- Overmolded baseplate in AISI 304
- Spindle and cover in AISI 304
- Separate spindle and baseplate
- Vulcanized anti-slip NBR rubber

S400B HEAVY

Main features:
- Full machined baseplate in AISI 304
- Spindle and cover in AISI 304
- Washer in AISI 304 stainless steel

Versions available:
- Vulcanized anti-slip NBR rubber
- Double floor fixation

S400B HEAVY-SPLIT

Main features:
- Full machined baseplate in AISI 304
- Spindle and cover in AISI 304
- Separate spindle and baseplate

Versions available:
- Vulcanized anti-slip NBR rubber

The **S400B series**, with overmolded baseplate in AISI 304 stainless steel, threaded spindle with complete closure cover and stainless steel washer is the best choice for industrial environments where a high level of hygiene is required, like food, chemical and pharmaceutical industries.

The stainless steel baseplate and its particular shape guarantee an excellent cleanability, especially in critical conditions; the stainless steel cover avoids exposure of the thread part to external agents; the stainless steel washer ensures complete closure between the spindle and the baseplate and the NBR rubber guarantees anti-slip proprieties and hermetic closure between the leveler and the floor.

Maximum compressive strength (static load) as in the table, maximum tensile strength (static load) 4.000 N (S400); 8.000 N (S400 HEAVY); NOT AVAILABLE (SLIT and HEAVY-DUTY).

Accessori / Accessories / Zubehör Find out more details on page 643/644

Oadby **Core product range of Easy Clean Levelling Feet can be found here.**

On request vulcanized rubber can be provided white or blue and spindle can be made in AISI 316.

Materiale / *Material* / *Materialien:*
Base, stelo, rondella e boccola: Acciaio inox
Base plate, spindle, washer and cover: Stainless steel
Fussplatte, Spindel, Scheibe und Hülse: Edelstahl

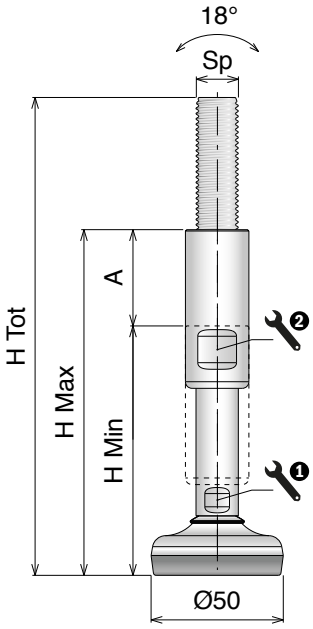

Ø50
DIAMETER (mm)

ANTI-SLIP

Art-Nr.	Sp	H Tot (mm)	H Min (mm)	H Max (mm)	A (mm)	1 (mm)	2 (mm)	Load (N)
902109	M12	181	101	146	45	10	17	3.000
902110		231	131	196	65	10	17	
902111	M16	181	101	146	45	13	19	3.000
902112		231	131	196	65	13	19	
902113	M20	181	101	146	45	17	24	3.000
902114		231	131	196	65	17	24	
902115	M24	181	101	146	45	19	30	3.000
902116		231	131	196	65	19	30	
902117	M30	181	101	146	45	24	36	3.000
902118		231	131	196	65	24	36	
902119		291	191	256	65	24	36	
902120	M36	181	101	146	45	30	42	3.000
902121		231	131	196	65	30	42	
902122		291	191	256	65	30	42	

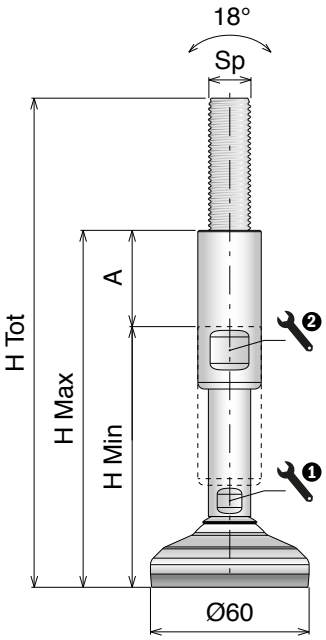

Ø60
DIAMETER (mm)

ANTI-SLIP

Art-Nr.	Sp	H Tot (mm)	H Min (mm)	H Max (mm)	A (mm)	1 (mm)	2 (mm)	Load (N)
902123	M12	185	105	150	45	10	17	4.500
902124		235	135	200	65	10	17	
902125	M16	185	105	150	45	13	19	4.500
902126		235	135	200	65	13	19	
902127	M20	185	105	150	45	17	24	4.500
902128		235	135	200	65	17	24	
902129	M24	185	105	150	45	19	30	4.500
902130		235	135	200	65	19	30	
902131	M30	185	105	150	45	24	36	4.500
902132		235	135	200	65	24	36	
902133		295	195	260	65	24	36	
902134	M36	185	105	150	45	30	42	4.500
902135		235	135	200	65	30	42	
902136		295	195	260	65	30	42	

Core product range of Easy Clean Levelling Feet can be found here.

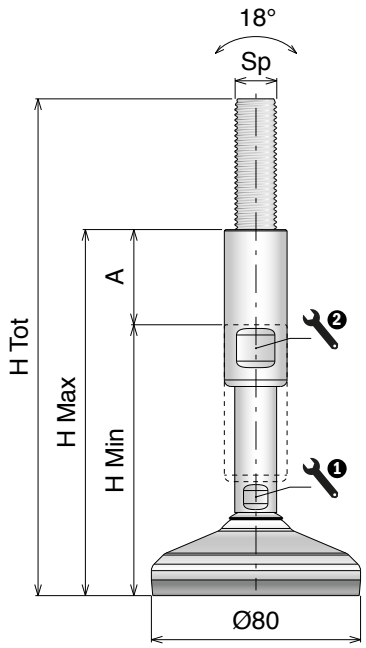

Ø80
DIAMETER (mm)

ANTI-SLIP

Art-Nr.	Sp	H Tot (mm)	H Min (mm)	H Max (mm)	A (mm)	1 (mm)	2 (mm)	Load (N)
902165	M12	190	110	155	45	10	17	12.000
902166		240	140	205	65	10	17	
902167	M16	190	110	155	45	13	19	15.000
902168		240	140	205	65	13	19	
902169	M20	190	110	155	45	17	24	15.000
902170		240	140	205	65	17	24	
902171	M24	190	110	155	45	19	30	15.000
902172		240	140	205	65	19	30	
902173	M30	190	110	155	45	24	36	15.000
902174		240	140	205	65	24	36	
902175		300	200	265	65	24	36	
902176	M36	190	110	155	45	30	42	15.000
902177		240	140	205	65	30	42	
902178		300	200	265	65	30	42	

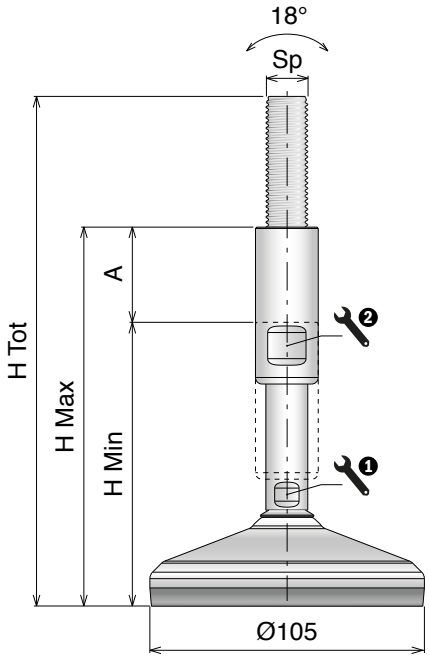

Ø105
DIAMETER (mm)

ANTI-SLIP

Art-Nr.	Sp	H Tot (mm)	H Min (mm)	H Max (mm)	A (mm)	1 (mm)	2 (mm)	Load (N)
902193	M12	195	115	160	45	10	17	12.000
902194		245	145	210	65	10	17	
902195	M16	195	115	160	45	13	19	25.000
902196		245	145	210	65	13	19	
902197	M20	195	115	160	45	17	24	25.000
902198		245	145	210	65	17	24	
902199	M24	195	115	160	45	19	30	25.000
902200		245	145	210	65	19	30	
902201	M30	195	115	160	45	24	36	25.000
902202		245	145	210	65	24	36	
902203		305	205	270	65	24	36	
902204	M36	195	115	160	45	30	42	25.000
902205		245	145	210	65	30	42	
902206		305	205	270	65	30	42	

Core product range of Easy Clean Levelling Feet can be found here.

S400B Series

Piedi di livellamento / *Leveling feet* / *Nivellierfüße*

On request vulcanized rubber can be provided white or blue and spindle can be made in AISI 316.

Materiale / *Material* / *Materialien:*
Base, stelo, rondella e boccola: Acciaio inox
Base plate, spindle, washer and cover: Stainless steel
Fussplatte, Spindel, Scheibe und Hülse: Edelstahl

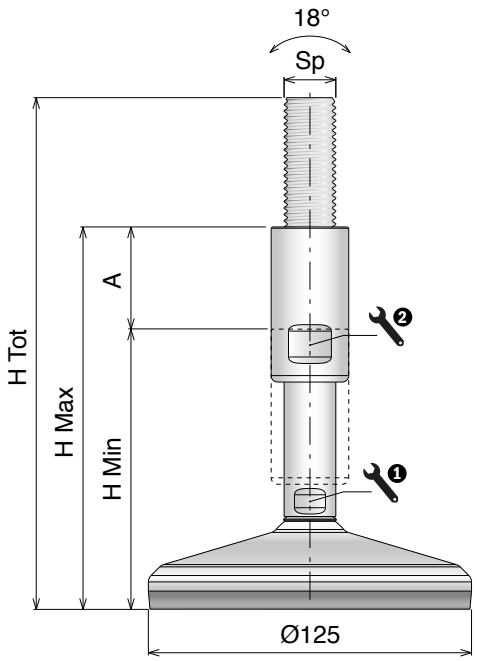

Ø125

DIAMETER (mm)

ANTI-SLIP

Art-Nr.	Sp	H Tot (mm)	H Min (mm)	H Max (mm)	A (mm)	1 (mm)	2 (mm)	Load (N)
902207	M12	195	115	160	45	10	17	12.000
902208		245	145	210	65	10	17	
902209	M16	195	115	160	45	13	19	30.000
902210		245	145	210	65	13	19	
902211	M20	195	115	160	45	17	24	30.000
902212		245	145	210	65	17	24	
902213	M24	195	115	160	45	19	30	30.000
902214		245	145	210	65	19	30	
902215	M30	195	115	160	45	24	36	30.000
902216		245	145	210	65	24	36	
902217		305	205	270	65	24	36	
902218	M36	195	115	160	45	30	42	30.000
902219		245	145	210	65	30	42	
902220		305	205	270	65	30	42	

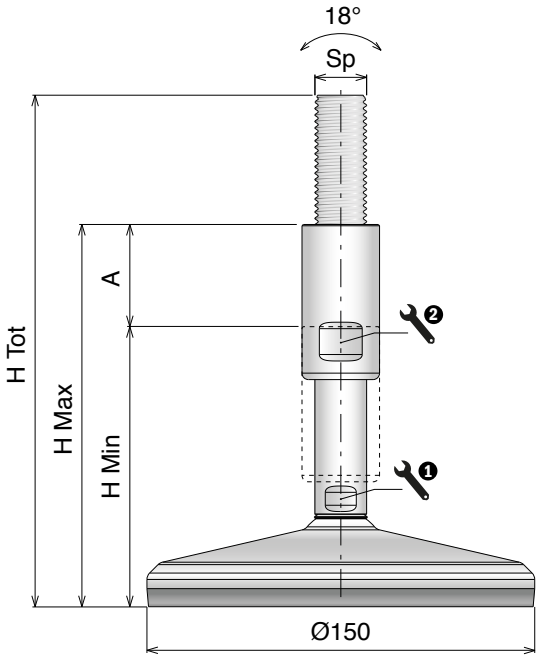

Ø150

DIAMETER (mm)

ANTI-SLIP

Art-Nr.	Sp	H Tot (mm)	H Min (mm)	H Max (mm)	A (mm)	1 (mm)	2 (mm)	Load (N)
902221	M12	195	115	160	45	10	17	12.000
902222		245	145	210	65	10	17	
902223	M16	195	115	160	45	13	19	30.000
902224		245	145	210	65	13	19	
902225	M20	195	115	160	45	17	24	45.000
902226		245	145	210	65	17	24	
902227	M24	195	115	160	45	19	30	45.000
902228		245	145	210	65	19	30	
902229	M30	195	115	160	45	24	36	45.000
902230		245	145	210	65	24	36	
902231		305	205	270	65	24	36	
902232	M36	195	115	160	45	30	42	45.000
902233		245	145	210	65	30	42	
902234		305	205	270	65	30	42	

Core product range of Easy Clean Levelling Feet can be found here.

Core product range
Available from stock in Leicester
Easy Available from stock in Italy
Standard Produced to order in Italy

Movex

Materiale / *Material / Materialien:*
Base, stelo, rondella e boccola: Acciaio inox
Base plate, spindle, washer and cover: Stainless steel
Fussplatte, Spindel, Scheibe und Hülse: Edelstahl

On request vulcanized rubber can be provided white or blue and spindle can be made in AISI 316.

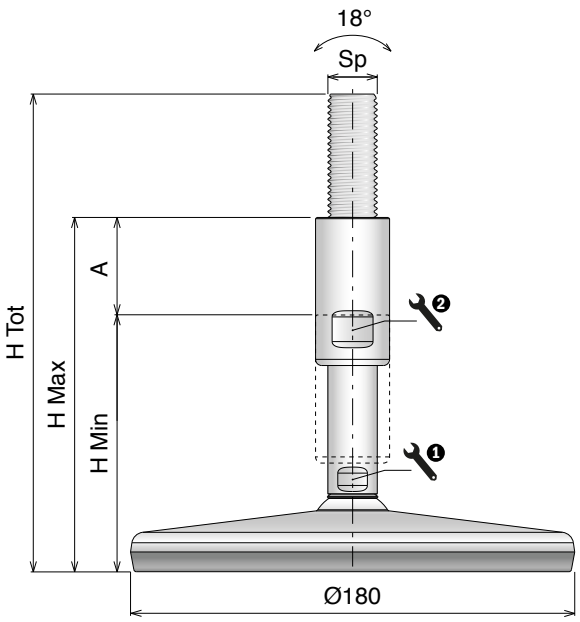

Ø180
DIAMETER (mm)

ANTI-SLIP

Art-Nr.	Sp	H Tot (mm)	H Min (mm)	H Max (mm)	A (mm)	① (mm)	② (mm)	Load (N)
902235	M12	191	111	156	45	10	17	12.000
902236		241	141	206	65	10	17	
902237	M16	191	111	156	45	13	19	30.000
902238		241	141	206	65	13	19	
902239	M20	191	111	156	45	17	24	38.000
902240		241	141	206	65	17	24	
902241	M24	191	111	156	45	19	30	38.000
902242		241	141	206	65	19	30	
902243	M30	191	111	156	45	24	36	38.000
902244		241	141	206	65	24	36	
902245		301	201	266	65	24	36	
902246	M36	191	111	156	45	30	42	38.000
902247		241	141	206	65	30	42	
902248		301	201	266	65	30	42	

Core product range of Easy Clean Levelling Feet can be found here.

S400B Series

Piedi di livellamento / *Leveling feet* / *Nivellierfüße*

On request vulcanized rubber can be provided white or blue and spindle can be made in AISI 316.

Materiale / *Material* / *Materialien:*
Base, stelo, rondella e boccola: Acciaio inox
Base plate, spindle, washer and cover: Stainless steel
Fussplatte, Spindel, Scheibe und Hülse: Edelstahl

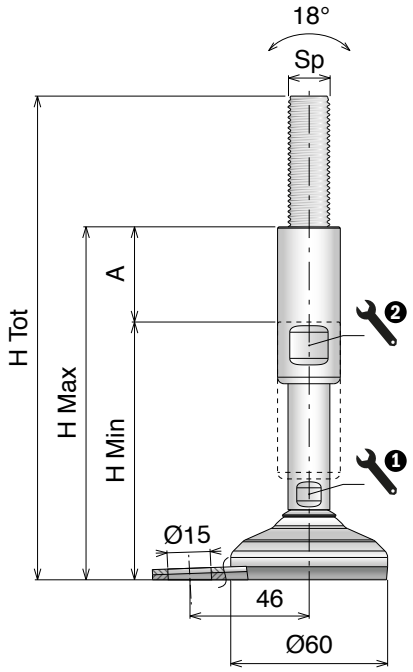

Ø 60

DIAMETER (mm) — ANTI-SLIP — FIXING POINT x1

Art-Nr.	Sp	H Tot (mm)	H Min (mm)	H Max (mm)	A (mm)	1 (mm)	2 (mm)	Load (N)
902249	M12	185	105	150	45	10	17	4.500
902250		235	135	200	65	10	17	
902251	M16	185	105	150	45	13	19	4.500
902252		235	135	200	65	13	19	
902253	M20	185	105	150	45	17	24	4.500
902254		235	135	200	65	17	24	
902255	M24	185	105	150	45	19	30	4.500
902256		235	135	200	65	19	30	
902257	M30	185	105	150	45	24	36	4.500
902258		235	135	200	65	24	36	
902259		295	195	260	65	24	36	
902260	M36	185	105	150	45	30	42	4.500
902261		235	135	200	65	30	42	
902262		295	195	260	65	30	42	

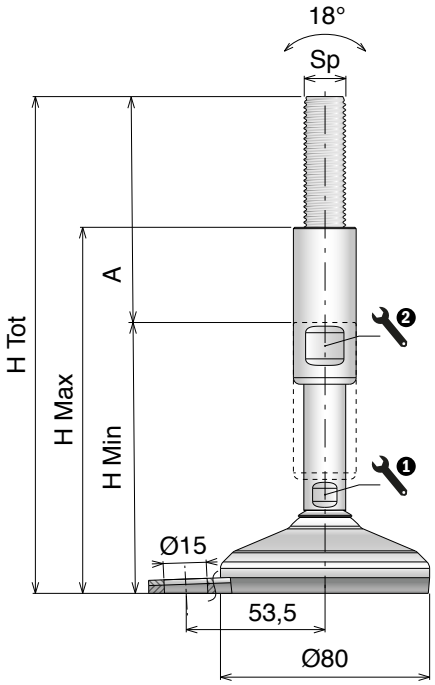

Ø 80

DIAMETER (mm) — ANTI-SLIP — FIXING POINT x1

Art-Nr.	Sp	H Tot (mm)	H Min (mm)	H Max (mm)	A (mm)	1 (mm)	2 (mm)	Load (N)
902277	M12	190	110	155	45	10	17	12.000
902278		240	140	205	65	10	17	
902279	M16	190	110	155	45	13	19	15.000
902280		240	140	205	65	13	19	
902281	M20	190	110	155	45	17	24	15.000
902282		240	140	205	65	17	24	
902283	M24	190	110	155	45	19	30	15.000
902284		240	140	205	65	19	30	
902285	M30	190	110	155	45	24	36	15.000
902286		240	140	205	65	24	36	
902287		300	200	265	65	24	36	
902288	M36	190	110	155	45	30	42	15.000
902289		240	140	205	65	30	42	
902290		300	200	265	65	30	42	

Core product range of Easy Clean Levelling Feet can be found here.

Core product range
Available from stock in Leicester
Easy Available from stock in Italy
Standard Produced to order in Italy

Movex

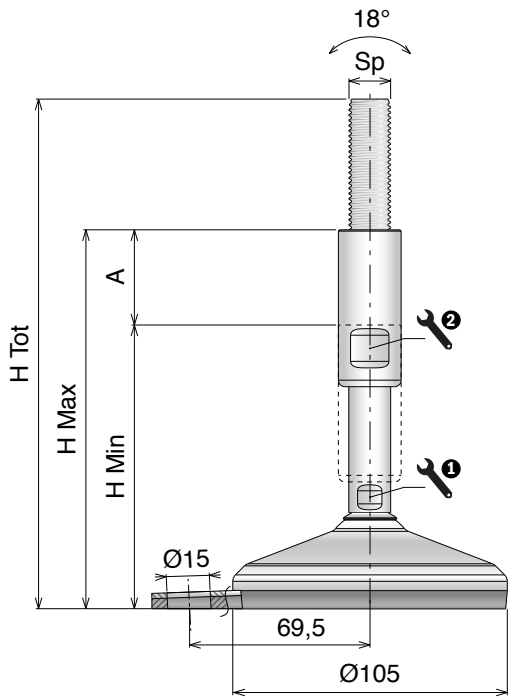

ø105

DIAMETER (mm) — ANTI-SLIP — FIXING POINT x1

Art-Nr.	Sp	H Tot (mm)	H Min (mm)	H Max (mm)	A (mm)	1 (mm)	2 (mm)	Load (N)
902305	M12	195	115	160	45	10	17	12.000
902306		245	145	210	65	10	17	
902307	M16	195	115	160	45	13	19	25.000
902308		245	145	210	65	13	19	
902309	M20	195	115	160	45	17	24	25.000
902310		245	145	210	65	17	24	
902311	M24	195	115	160	45	19	30	25.000
902312		245	145	210	65	19	30	
902313	M30	195	115	160	45	24	36	25.000
902314		245	145	210	65	24	36	
902315		305	205	270	65	24	36	
902316	M36	195	115	160	45	30	42	25.000
902317		245	145	210	65	30	42	
902318		305	205	270	65	30	42	

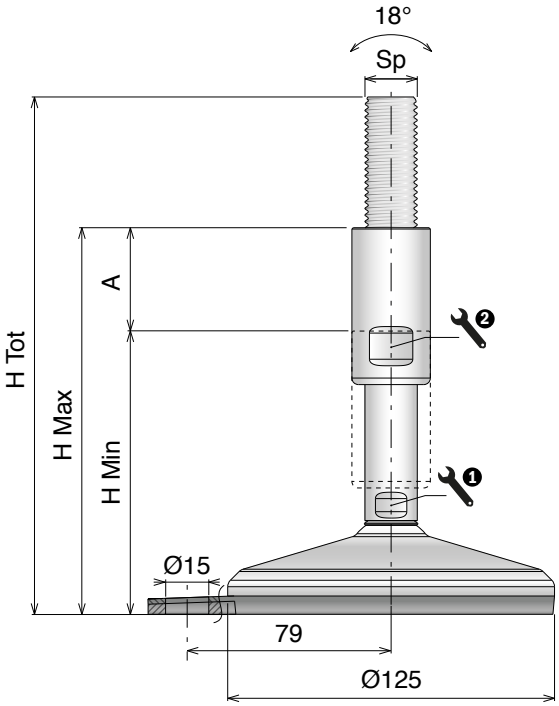

ø125

DIAMETER (mm) — ANTI-SLIP — FIXING POINT x1

Art-Nr.	Sp	H Tot (mm)	H Min (mm)	H Max (mm)	A (mm)	1 (mm)	2 (mm)	Load (N)
902319	M12	195	115	160	45	10	17	12.000
902320		245	145	210	65	10	17	
902321	M16	195	115	160	45	13	19	30.000
902322		245	145	210	65	13	19	
902323	M20	195	115	160	45	17	24	30.000
902324		245	145	210	65	17	24	
902325	M24	195	115	160	45	19	30	30.000
902326		245	145	210	65	19	30	
902327	M30	195	115	160	45	24	36	30.000
902328		245	145	210	65	24	36	
902329		305	205	270	65	24	36	
902330	M36	195	115	160	45	30	42	30.000
902331		245	145	210	65	30	42	
902332		305	205	270	65	30	42	

Core product range of Easy Clean Levelling Feet can be found here.

S400B SPLIT

Piedi di livellamento / *Leveling feet* / *Nivellierfüße*

On request vulcanized rubber can be provided white or blue and spindle can be made in AISI 316.

Materiale / *Material* / *Materialien:*
Base, stelo, rondella e boccola: Acciaio inox
Base plate, spindle, washer and cover: Stainless steel
Fussplatte, Spindel, Scheibe und Hülse: Edelstahl

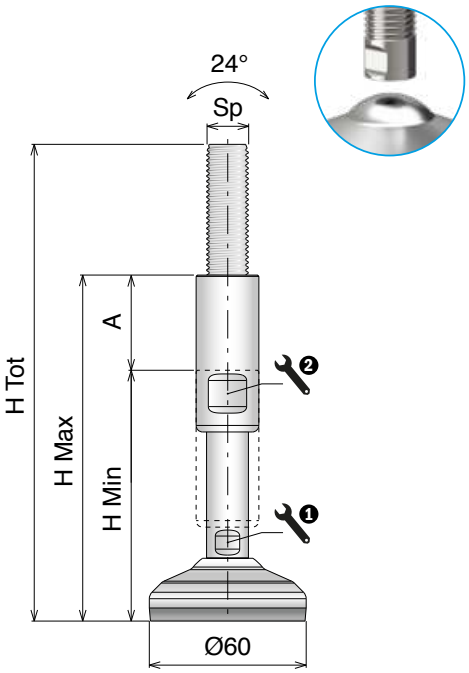

ø 60

DIAMETER (mm)

SLIT VERSION ANTI-SLIP

Art-Nr.	Sp	H Tot (mm)	H Min (mm)	H Max (mm)	A (mm)	1 (mm)	2 (mm)	Load (N)
902333	M12	184	104	149	45	10	17	4.500
902334		234	134	199	65	10	17	
902335	M16	184	104	149	45	13	19	4.500
902336		234	134	199	65	13	19	
902337	M20	184	104	149	45	17	24	4.500
902338		234	134	199	65	17	24	
902339	M24	184	104	149	45	19	30	4.500
902340		234	134	199	65	19	30	
902341	M30	184	104	149	45	24	36	4.500
902342		234	134	199	65	24	36	
902343		294	194	259	65	24	36	
902344	M36	184	104	149	45	30	42	4.500
902345		234	134	199	65	30	42	
902346		294	194	259	65	30	42	

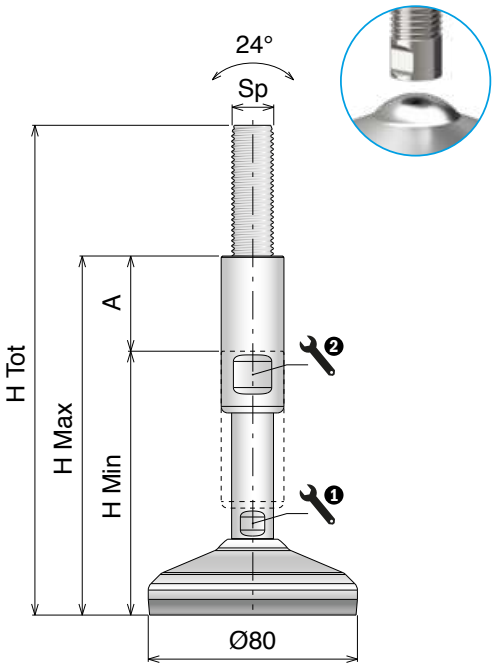

ø 80

DIAMETER (mm)

SLIT VERSION ANTI-SLIP

Art-Nr.	Sp	H Tot (mm)	H Min (mm)	H Max (mm)	A (mm)	1 (mm)	2 (mm)	Load (N)
902347	M12	189	109	154	45	10	17	12.000
902348		239	139	204	65	10	17	
902349	M16	189	109	154	45	13	19	15.000
902350		239	139	204	65	13	19	
902351	M20	189	109	154	45	17	24	15.000
902352		239	139	204	65	17	24	
902353	M24	189	109	154	45	19	30	15.000
902354		239	139	204	65	19	30	
902355	M30	189	109	154	45	24	36	15.000
902356		239	139	204	65	24	36	
902357		299	199	264	65	24	36	
902358	M36	189	109	154	45	30	42	15.000
902359		239	139	204	65	30	42	
902360		299	199	264	65	30	42	

Core product range of Easy Clean Levelling Feet can be found here.

Core product range
Available from stock in Leicester
Easy Available from stock in Italy
Standard Produced to order in Italy

Movex

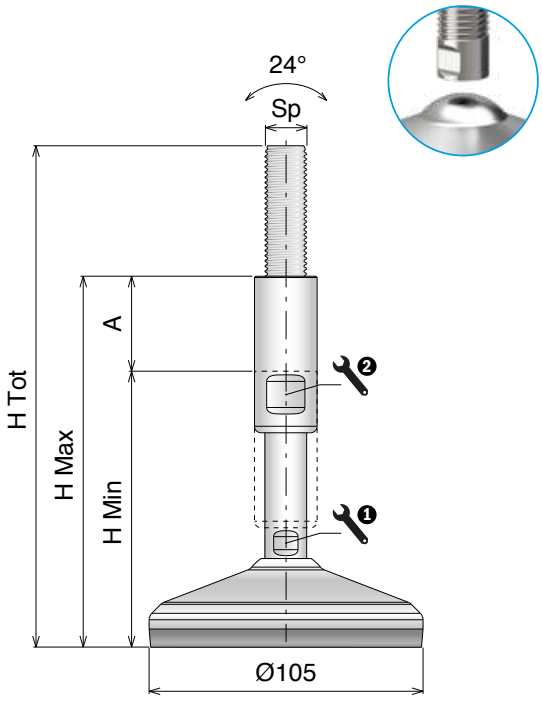

Ø105
DIAMETER (mm)

SLIT VERSION ANTI-SLIP

Art-Nr.	Sp	H Tot (mm)	H Min (mm)	H Max (mm)	A (mm)	① (mm)	② (mm)	Load (N)
902361	M12	194	114	159	45	10	17	12.000
902362		244	144	209	65	10	17	
902363	M16	194	114	159	45	13	19	25.000
902364		244	144	209	65	13	19	
902365	M20	194	114	159	45	17	24	25.000
902366		244	144	209	65	17	24	
902367	M24	194	114	159	45	19	30	25.000
902368		244	144	209	65	19	30	
902369	M30	194	114	159	45	24	36	25.000
902370		244	144	209	65	24	36	
902371		304	204	269	65	24	36	
902372	M36	194	114	159	45	30	42	25.000
902373		244	144	209	65	30	42	
902374		304	204	269	65	30	42	

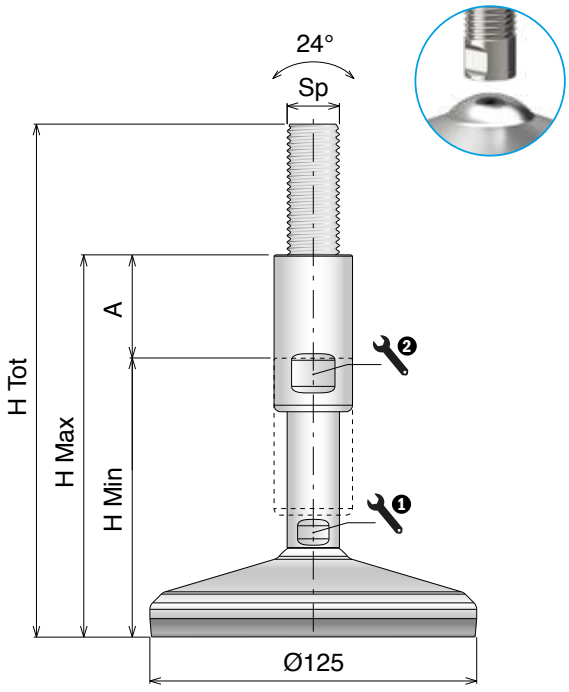

Ø125
DIAMETER (mm)

SLIT VERSION ANTI-SLIP

Art-Nr.	Sp	H Tot (mm)	H Min (mm)	H Max (mm)	A (mm)	① (mm)	② (mm)	Load (N)
902375	M12	194	114	159	45	10	17	12.000
902376		244	144	209	65	10	17	
902377	M16	194	114	159	45	13	19	30.000
902378		244	144	209	65	13	19	
902379	M20	194	114	159	45	17	24	30.000
902380		244	144	209	65	17	24	
902381	M24	194	114	159	45	19	30	30.000
902382		244	144	209	65	19	30	
902383	M30	194	114	159	45	24	36	30.000
902384		244	144	209	65	24	36	
902385		304	204	269	65	24	36	
902386	M36	194	114	159	45	30	42	30.000
902387		244	144	209	65	30	42	
902388		304	204	269	65	30	42	

Core product range of Easy Clean Levelling Feet can be found here.

S400B SPLIT

Piedi di livellamento / *Leveling feet* / *Nivellierfüße*

On request vulcanized rubber can be provided white or blue and spindle can be made in AISI 316.

Materiale / *Material* / *Materialien:*
Base, stelo, rondella e boccola: Acciaio inox
Base plate, spindle, washer and cover: Stainless steel
Fussplatte, Spindel, Scheibe und Hülse: Edelstahl

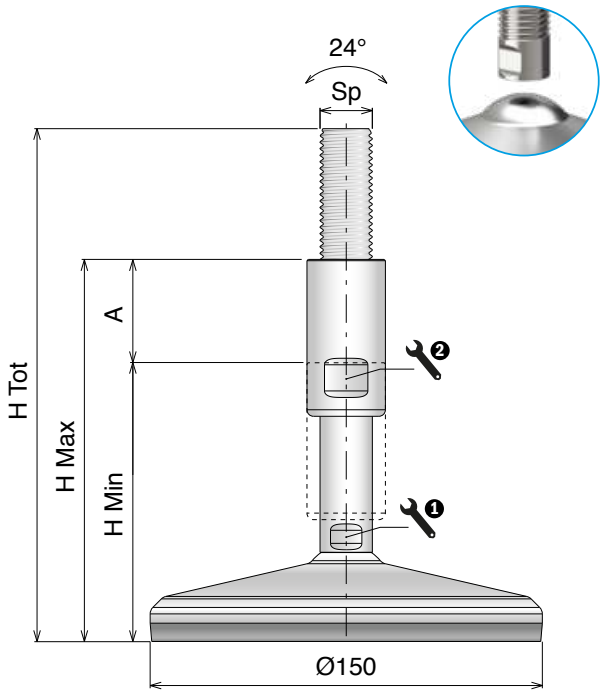

ø150
DIAMETER (mm)

SLIT VERSION ANTI-SLIP

Art-Nr.	Sp	H Tot (mm)	H Min (mm)	H Max (mm)	A (mm)	1 (mm)	2 (mm)	Load (N)
902389	M12	194	114	159	45	10	17	12.000
902390		244	144	209	65	10	17	
902391	M16	194	114	159	45	13	19	30.000
902392		244	144	209	65	13	19	
902393	M20	194	114	159	45	17	24	45.000
902394		244	144	209	65	17	24	
902395	M24	194	114	159	45	19	30	45.000
902396		244	144	209	65	19	30	
902397	M30	194	114	159	45	24	36	45.000
902398		244	144	209	65	24	36	
902399		304	204	269	65	24	36	
902400	M36	194	114	159	45	30	42	45.000
902401		244	144	209	65	30	42	
902402		304	204	269	65	30	42	

Core product range of Easy Clean Levelling Feet can be found here.

Oadby Core product range
Oadby Available from stock in Leicester
Easy Available from stock in Italy
Standard Produced to order in Italy

Movex

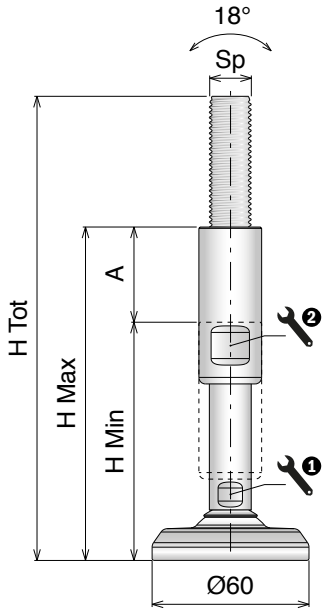

Ø60
DIAMETER (mm)

Kg
HIGH LOAD

Art-Nr.	Sp	H Tot (mm)	H Min (mm)	H Max (mm)	A (mm)	1 (mm)	2 (mm)	Load (N)
902403	M12	177,5	97,5	142,5	45	10	17	12.000
902404		227,5	127,5	192,5	65	10	17	
902405	M16	177,5	97,5	142,5	45	13	19	30.000
902406		227,5	127,5	192,5	65	13	19	
902407	M20	177,5	97,5	142,5	45	17	24	45.000
902408		227,5	127,5	192,5	65	17	24	
902409	M24	177,5	97,5	142,5	45	19	30	60.000
902410		227,5	127,5	192,5	65	19	30	
902411	M30	177,5	97,5	142,5	45	24	36	60.000
902412		227,5	127,5	192,5	65	24	36	
902413		287,5	187,5	252,5	65	24	36	
902414	M36	177,5	97,5	142,5	45	30	42	60.000
902415		227,5	127,5	192,5	65	30	42	
902416		287,5	187,5	252,5	65	30	42	

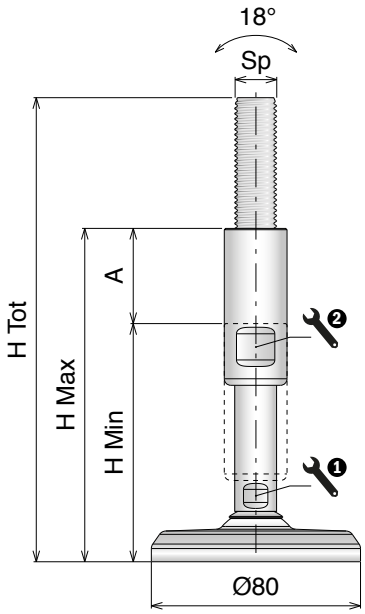

Ø80
DIAMETER (mm)

Kg
HIGH LOAD

Art-Nr.	Sp	H Tot (mm)	H Min (mm)	H Max (mm)	A (mm)	1 (mm)	2 (mm)	Load (N)
902417	M12	177,5	97,5	142,5	45	10	17	12.000
902418		227,5	127,5	192,5	65	10	17	
902419	M16	177,5	97,5	142,5	45	13	19	30.000
902420		227,5	127,5	192,5	65	13	19	
902421	M20	177,5	97,5	142,5	45	17	24	45.000
902422		227,5	127,5	192,5	65	17	24	
902423	M24	177,5	97,5	142,5	45	19	30	70.000
902424		227,5	127,5	192,5	65	19	30	
902425	M30	177,5	97,5	142,5	45	24	36	80.000
902426		227,5	127,5	192,5	65	24	36	
902427		287,5	187,5	252,5	65	24	36	
902428	M36	177,5	97,5	142,5	45	30	42	80.000
902429		227,5	127,5	192,5	65	30	42	
902430		287,5	187,5	252,5	65	30	42	

Core product range of Easy Clean Levelling Feet can be found here.

S400B HEAVY

Piedi di livellamento / *Leveling feet* / *Nivellierfüße*

On request spindle can be made in AISI 316.

Materiale / *Material* / *Materialien:*
Base, stelo, rondella e boccola: Acciaio inox
Base plate, spindle, washer and cover: Stainless steel
Fussplatte, Spindel, Scheibe und Hülse: Edelstahl

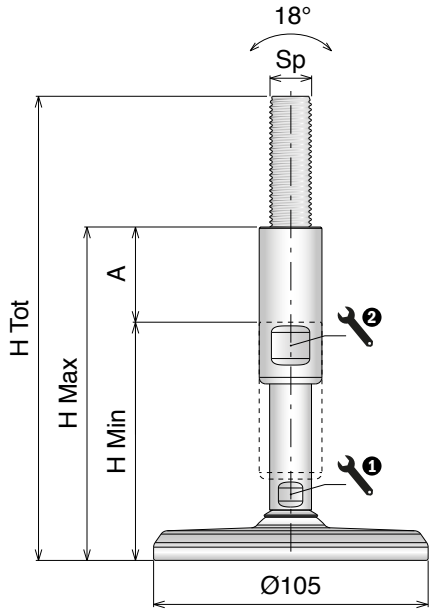

Ø105

DIAMETER (mm)

Kg
HIGH LOAD

Art-Nr.	Sp	H Tot (mm)	H Min (mm)	H Max (mm)	A (mm)	1 (mm)	2 (mm)	Load (N)
902431	M12	177,5	97,5	142,5	45	10	17	12.000
902432		227,5	127,5	192,5	65	10	17	
902433	M16	177,5	97,5	142,5	45	13	19	30.000
902434		227,5	127,5	192,5	65	13	19	
902435	M20	177,5	97,5	142,5	45	17	24	45.000
902436		227,5	127,5	192,5	65	17	24	
902437	M24	177,5	97,5	142,5	45	19	30	70.000
902438		227,5	127,5	192,5	65	19	30	
902439	M30	177,5	97,5	142,5	45	24	36	100.000
902440		227,5	127,5	192,5	65	24	36	
902441		287,5	187,5	252,5	65	24	36	
902442	M36	177,5	97,5	142,5	45	30	42	120.000
902443		227,5	127,5	192,5	65	30	42	
902444		287,5	187,5	252,5	65	30	42	

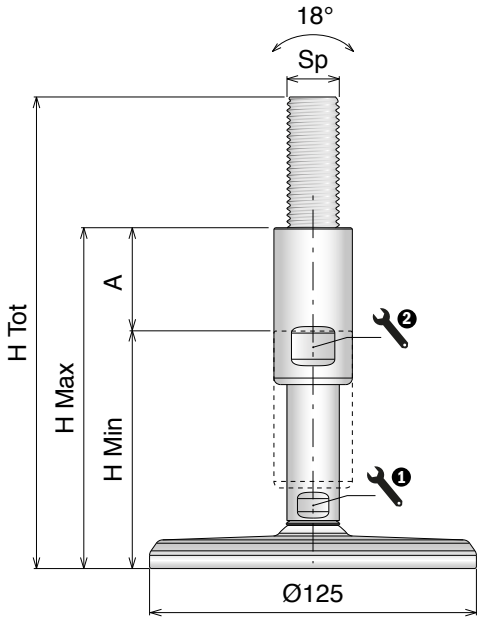

Ø125

DIAMETER (mm)

Kg
HIGH LOAD

Art-Nr.	Sp	H Tot (mm)	H Min (mm)	H Max (mm)	A (mm)	1 (mm)	2 (mm)	Load (N)
902445	M12	177,5	97,5	142,5	45	10	17	12.000
902446		227,5	127,5	192,5	65	10	17	
902447	M16	177,5	97,5	142,5	45	13	19	30.000
902448		227,5	127,5	192,5	65	13	19	
902449	M20	177,5	97,5	142,5	45	17	24	45.000
902450		227,5	127,5	192,5	65	17	24	
902451	M24	177,5	97,5	142,5	45	19	30	70.000
902452		227,5	127,5	192,5	65	19	30	
902453	M30	177,5	97,5	142,5	45	24	36	100.000
902454		227,5	127,5	192,5	65	24	36	
902455		287,5	187,5	252,5	65	24	36	
902456	M36	177,5	97,5	142,5	45	30	42	130.000
902457		227,5	127,5	192,5	65	30	42	
902458		287,5	187,5	252,5	65	30	42	

Core product range of Easy Clean Levelling Feet can be found here.

Core product range
Available from stock in Leicester
Easy Available from stock in Italy
Standard Produced to order in Italy

Movex

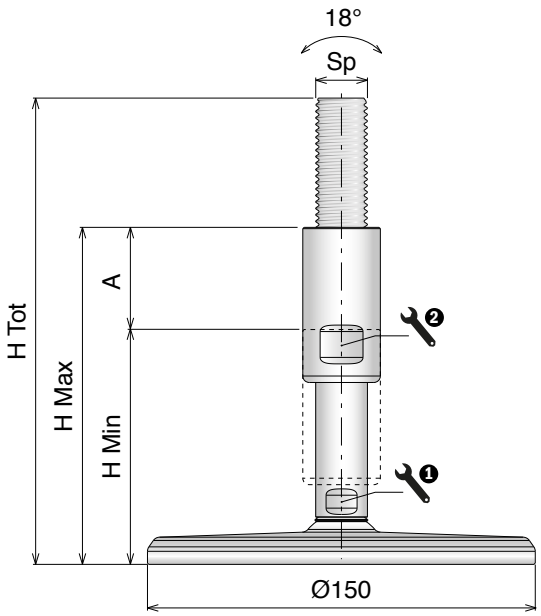

Ø150
DIAMETER (mm)

HIGH LOAD

Art-Nr.	Sp	H Tot (mm)	H Min (mm)	H Max (mm)	A (mm)	1 (mm)	2 (mm)	Load (N)
902459	M12	177,5	97,5	142,5	45	10	17	12.000
902460		227,5	127,5	192,5	65	10	17	
902461	M16	177,5	97,5	142,5	45	13	19	30.000
902462		227,5	127,5	192,5	65	13	19	
902463	M20	177,5	97,5	142,5	45	17	24	45.000
902464		227,5	127,5	192,5	65	17	24	
902465	M24	177,5	97,5	142,5	45	19	30	70.000
902466		227,5	127,5	192,5	65	19	30	
902467	M30	177,5	97,5	142,5	45	24	36	100.000
902468		227,5	127,5	192,5	65	24	36	
902469		287,5	187,5	252,5	65	24	36	
902470	M36	177,5	97,5	142,5	45	30	42	120.000
902471		227,5	127,5	192,5	65	30	42	
902472		287,5	187,5	252,5	65	30	42	

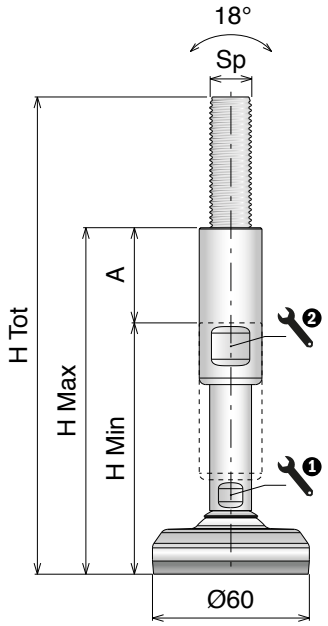

Ø60
DIAMETER (mm)

HIGH LOAD ANTI-SLIP

Art-Nr.	Sp	H Tot (mm)	H Min (mm)	H Max (mm)	A (mm)	1 (mm)	2 (mm)	Load (N)
902473	M12	182,5	102,5	147,5	45	10	17	12.000
902474		232,5	132,5	197,5	65	10	17	
902475	M16	182,5	102,5	147,5	45	13	19	30.000
902476		232,5	132,5	197,5	65	13	19	
902477	M20	182,5	102,5	147,5	45	17	24	45.000
902478		232,5	132,5	197,5	65	17	24	
902479	M24	182,5	102,5	147,5	45	19	30	60.000
902480		232,5	132,5	197,5	65	19	30	
902481	M30	182,5	102,5	147,5	45	24	36	60.000
902482		232,5	132,5	197,5	65	24	36	
902483		292,5	192,5	257,5	65	24	36	
902484	M36	182,5	102,5	147,5	45	30	42	60.000
902485		232,5	132,5	197,5	65	30	42	
902486		292,5	192,5	257,5	65	30	42	

Core product range of Easy Clean Levelling Feet can be found here.

S400B HEAVY

Piedi di livellamento / *Leveling feet* / *Nivellierfüße*

On request vulcanized rubber can be provided white or blue and spindle can be made in AISI 316.

Materiale / *Material* / *Materialien:*
Base, stelo, rondella e boccola: Acciaio inox
Base plate, spindle, washer and cover: Stainless steel
Fussplatte, Spindel, Scheibe und Hülse: Edelstahl

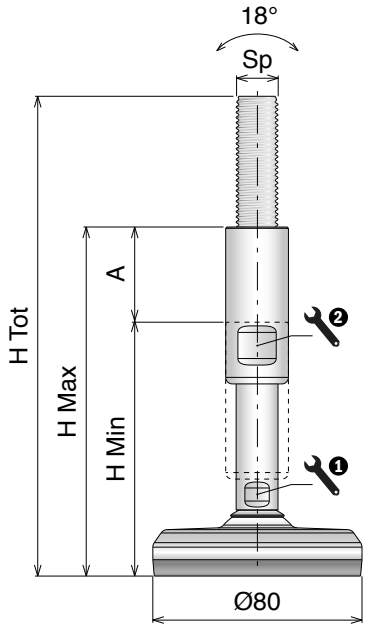

Ø80

DIAMETER (mm) — HIGH LOAD — ANTI-SLIP

Art-Nr.	Sp	H Tot (mm)	H Min (mm)	H Max (mm)	A (mm)	1 (mm)	2 (mm)	Load (N)
902487	M12	183,5	103,5	148,5	45	10	17	12.000
902488		233,5	133,5	198,5	65	10	17	
902489	M16	183,5	103,5	148,5	45	13	19	30.000
902490		233,5	133,5	198,5	65	13	19	
902491	M20	183,5	103,5	148,5	45	17	24	45.000
902492		233,5	133,5	198,5	65	17	24	
902493	M24	183,5	103,5	148,5	45	19	30	70.000
902494		233,5	133,5	198,5	65	19	30	
902495	M30	183,5	103,5	148,5	45	24	36	80.000
902496		233,5	133,5	198,5	65	24	36	
902497		293,5	193,5	258,5	65	24	36	
902498	M36	183,5	103,5	148,5	45	30	42	80.000
902499		233,5	133,5	198,5	65	30	42	
902500		293,5	193,5	258,5	65	30	42	

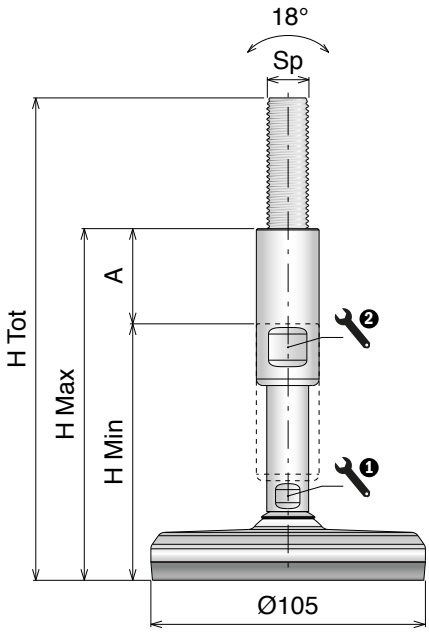

Ø105

DIAMETER (mm) — HIGH LOAD — ANTI-SLIP

Art-Nr.	Sp	H Tot (mm)	H Min (mm)	H Max (mm)	A (mm)	1 (mm)	2 (mm)	Load (N)
902501	M12	184,5	104,5	149,5	45	10	17	12.000
902502		234,5	134,5	199,5	65	10	17	
902503	M16	184,5	104,5	149,5	45	13	19	30.000
902504		234,5	134,5	199,5	65	13	19	
902505	M20	184,5	104,5	149,5	45	17	24	45.000
902506		234,5	134,5	199,5	65	17	24	
902507	M24	184,5	104,5	149,5	45	19	30	70.000
902508		234,5	134,5	199,5	65	19	30	
902509	M30	184,5	104,5	149,5	45	24	36	100.000
902510		234,5	134,5	199,5	65	24	36	
902511		294,5	194,5	259,5	65	24	36	
902512	M36	184,5	104,5	149,5	45	30	42	120.000
902513		234,5	134,5	199,5	65	30	42	
902514		294,5	194,5	259,5	65	30	42	

Core product range of Easy Clean Levelling Feet can be found here.

Core product range
Available from stock in Leicester
Easy Available from stock in Italy
Standard Produced to order in Italy

Movex

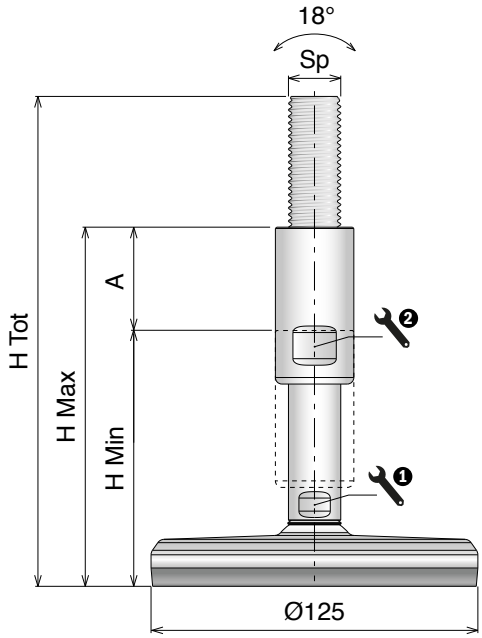

Ø125
DIAMETER (mm)

HIGH LOAD ANTI-SLIP

Art-Nr.	Sp	H Tot (mm)	H Min (mm)	H Max (mm)	A (mm)	1 (mm)	2 (mm)	Load (N)
902515	M12	184,5	104,5	149,5	45	10	17	12.000
902516		234,5	134,5	199,5	65	10	17	
902517	M16	184,5	104,5	149,5	45	13	19	30.000
902518		234,5	134,5	199,5	65	13	19	
902519	M20	184,5	104,5	149,5	45	17	24	45.000
902520		234,5	134,5	199,5	65	17	24	
902521	M24	184,5	104,5	149,5	45	19	30	70.000
902522		234,5	134,5	199,5	65	19	30	
902523	M30	184,5	104,5	149,5	45	24	36	100.000
902524		234,5	134,5	199,5	65	24	36	
902525		294,5	194,5	259,5	65	24	36	
902526	M36	184,5	104,5	149,5	45	30	42	130.000
902527		234,5	134,5	199,5	65	30	42	
902528		294,5	194,5	259,5	65	30	42	

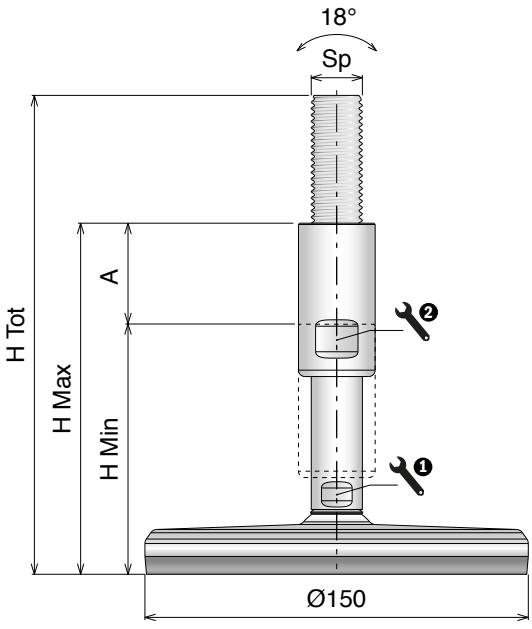

Ø150
DIAMETER (mm)

HIGH LOAD ANTI-SLIP

Art-Nr.	Sp	H Tot (mm)	H Min (mm)	H Max (mm)	A (mm)	1 (mm)	2 (mm)	Load (N)
902529	M12	184,5	104,5	149,5	45	10	17	12.000
902530		234,5	134,5	199,5	65	10	17	
902531	M16	184,5	104,5	149,5	45	13	19	30.000
902532		234,5	134,5	199,5	65	13	19	
902533	M20	184,5	104,5	149,5	45	17	24	45.000
902534		234,5	134,5	199,5	65	17	24	
902535	M24	184,5	104,5	149,5	45	19	30	70.000
902536		234,5	134,5	199,5	65	19	30	
902537	M30	184,5	104,5	149,5	45	24	36	100.000
902538		234,5	134,5	199,5	65	24	36	
902539		294,5	194,5	259,5	65	24	36	
902540	M36	184,5	104,5	149,5	45	30	42	150.000
902541		234,5	134,5	199,5	65	30	42	
902542		294,5	194,5	259,5	65	30	42	

Core product range of Easy Clean Levelling Feet can be found here.

S400B HEAVY

Piedi di livellamento / *Leveling feet* / *Nivellierfüße*

On request spindle can be made in AISI 316.

Materiale / *Material* / *Materialien:*
Base, stelo, rondella e boccola: Acciaio inox
Base plate, spindle, washer and cover: Stainless steel
Fussplatte, Spindel, Scheibe und Hülse: Edelstahl

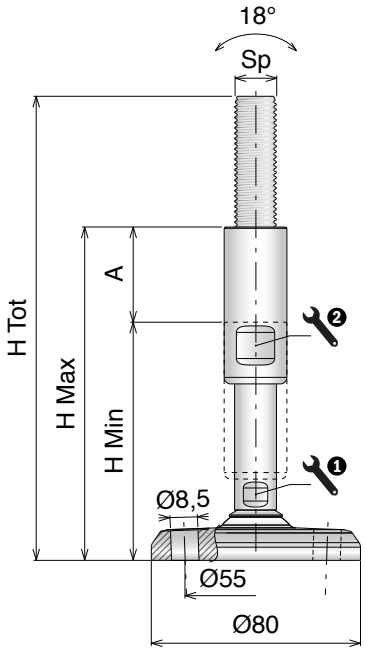

Ø 80

DIAMETER (mm) — HIGH LOAD — FIXING POINT (x2)

Art-Nr.	Sp	H Tot (mm)	H Min (mm)	H Max (mm)	A (mm)	1 (mm)	2 (mm)	Load (N)
902557	M12	177,5	97,5	142,5	45	10	17	12.000
902558		227,5	127,5	192,5	65	10	17	
902559	M16	177,5	97,5	142,5	45	13	19	30.000
902560		227,5	127,5	192,5	65	13	19	
902561	M20	177,5	97,5	142,5	45	17	24	45.000
902562		227,5	127,5	192,5	65	17	24	
902563	M24	177,5	97,5	142,5	45	19	30	70.000
902564		227,5	127,5	192,5	65	19	30	
902565	M30	177,5	97,5	142,5	45	24	36	80.000
902566		227,5	127,5	192,5	65	24	36	
902567		287,5	187,5	252,5	65	24	36	
902568	M36	177,5	97,5	142,5	45	30	42	80.000
902569		227,5	127,5	192,5	65	30	42	
902570		287,5	187,5	252,5	65	30	42	

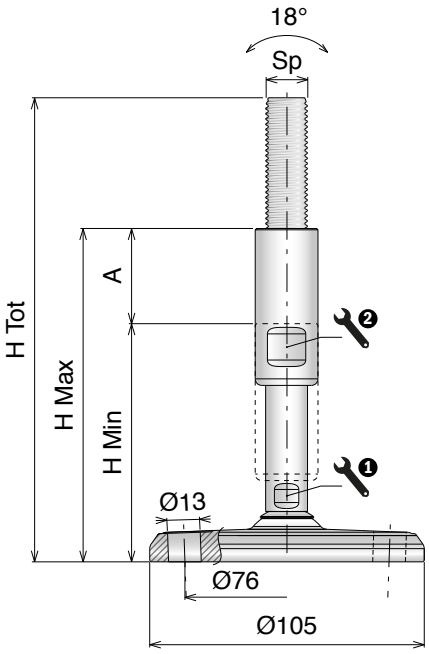

Ø 105

DIAMETER (mm) — HIGH LOAD — FIXING POINT (x2)

Art-Nr.	Sp	H Tot (mm)	H Min (mm)	H Max (mm)	A (mm)	1 (mm)	2 (mm)	Load (N)
902571	M12	177,5	97,5	142,5	45	10	17	12.000
902572		227,5	127,5	192,5	65	10	17	
902573	M16	177,5	97,5	142,5	45	13	19	30.000
902574		227,5	127,5	192,5	65	13	19	
902575	M20	177,5	97,5	142,5	45	17	24	45.000
902576		227,5	127,5	192,5	65	17	24	
902577	M24	177,5	97,5	142,5	45	19	30	70.000
902578		227,5	127,5	192,5	65	19	30	
902579	M30	177,5	97,5	142,5	45	24	36	100.000
902580		227,5	127,5	192,5	65	24	36	
902581		287,5	187,5	252,5	65	24	36	
902582	M36	177,5	97,5	142,5	45	30	42	120.000
902583		227,5	127,5	192,5	65	30	42	
902584		287,5	187,5	252,5	65	30	42	

Core product range of Easy Clean Levelling Feet can be found here.

Core product range
Available from stock in Leicester
Easy Available from stock in Italy
Standard Produced to order in Italy

Movex

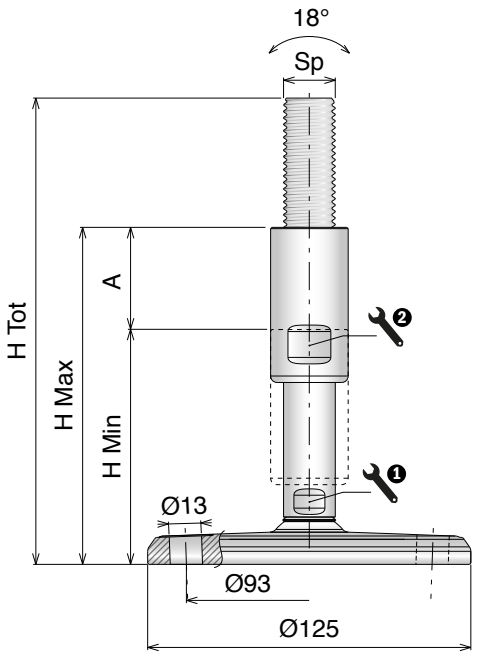

Ø125
DIAMETER (mm)

HIGH LOAD

x2 FIXING POINT

Art-Nr.	Sp	H Tot (mm)	H Min (mm)	H Max (mm)	A (mm)	1 (mm)	2 (mm)	Load (N)
902585	M12	177,5	97,5	142,5	45	10	17	12.000
902586		227,5	127,5	192,5	65	10	17	
902587	M16	177,5	97,5	142,5	45	13	19	30.000
902588		227,5	127,5	192,5	65	13	19	
902589	M20	177,5	97,5	142,5	45	17	24	45.000
902590		227,5	127,5	192,5	65	17	24	
902591	M24	177,5	97,5	142,5	45	19	30	70.000
902592		227,5	127,5	192,5	65	19	30	
902593	M30	177,5	97,5	142,5	45	24	36	100.000
902594		227,5	127,5	192,5	65	24	36	
902595		287,5	187,5	252,5	65	24	36	
902596	M36	177,5	97,5	142,5	45	30	42	130.000
902597		227,5	127,5	192,5	65	30	42	
902598		287,5	187,5	252,5	65	30	42	

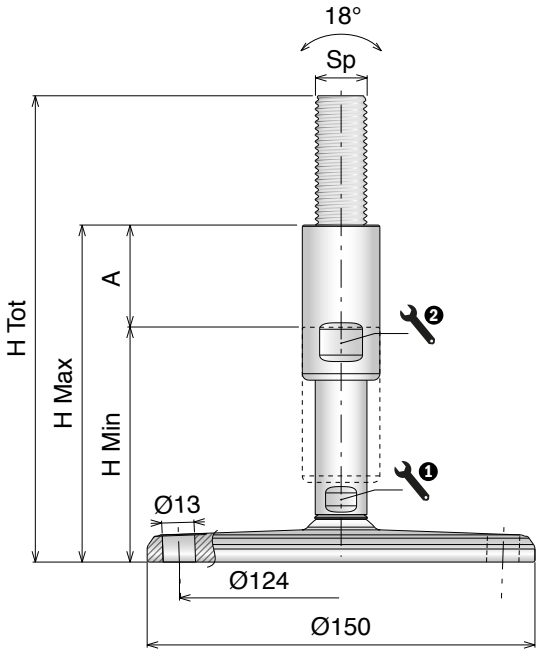

Ø150
DIAMETER (mm)

HIGH LOAD

x2 FIXING POINT

Art-Nr.	Sp	H Tot (mm)	H Min (mm)	H Max (mm)	A (mm)	1 (mm)	2 (mm)	Load (N)
902599	M12	177,5	97,5	142,5	45	10	17	12.000
902600		227,5	127,5	192,5	65	10	17	
902601	M16	177,5	97,5	142,5	45	13	19	30.000
902602		227,5	127,5	192,5	65	13	19	
902603	M20	177,5	97,5	142,5	45	17	24	45.000
902604		227,5	127,5	192,5	65	17	24	
902605	M24	177,5	97,5	142,5	45	19	30	70.000
902606		227,5	127,5	192,5	65	19	30	
902607	M30	177,5	97,5	142,5	45	24	36	100.000
902608		227,5	127,5	192,5	65	24	36	
902609		287,5	187,5	252,5	65	24	36	
902610	M36	177,5	97,5	142,5	45	30	42	150.000
902611		227,5	127,5	192,5	65	30	42	
902612		287,5	187,5	252,5	65	30	42	

Core product range of Easy Clean Levelling Feet can be found here.

S400B HEAVY

Piedi di livellamento / *Leveling feet* / *Nivellierfüße*

On request vulcanized rubber can be provided white or blue and spindle can be made in AISI 316.

Materiale / *Material* / *Materialien:*
Base, stelo, rondella e boccola: Acciaio inox
Base plate, spindle, washer and cover: Stainless steel
Fussplatte, Spindel, Scheibe und Hülse: Edelstahl

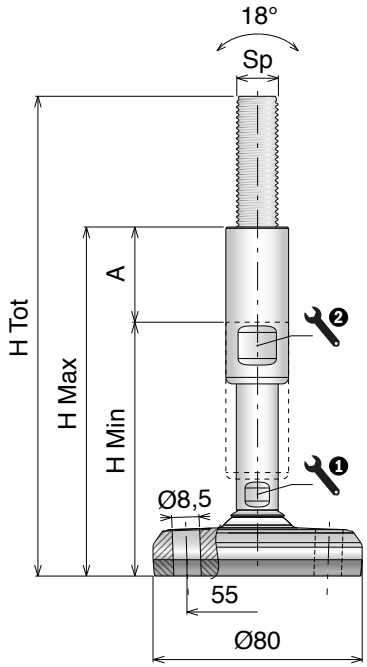

Ø80

DIAMETER (mm) | HIGH LOAD | FIXING POINT x2 | ANTI-SLIP

Art-Nr.	Sp	H Tot (mm)	H Min (mm)	H Max (mm)	A (mm)	1 (mm)	2 (mm)	Load (N)
902627	M12	183,5	103,5	148,5	45	10	17	12.000
902628		233,5	133,5	198,5	65	10	17	
902629	M16	183,5	103,5	148,5	45	13	19	30.000
902630		233,5	133,5	198,5	65	13	19	
902631	M20	183,5	103,5	148,5	45	17	24	45.000
902632		233,5	133,5	198,5	65	17	24	
902633	M24	183,5	103,5	148,5	45	19	30	80.000
902634		233,5	133,5	198,5	65	19	30	
902635	M30	183,5	103,5	148,5	45	24	36	80.000
902636		233,5	133,5	198,5	65	24	36	
902637		293,5	193,5	258,5	65	24	36	
902638	M36	183,5	103,5	148,5	45	30	42	80.000
902639		233,5	133,5	198,5	65	30	42	
902640		293,5	193,5	258,5	65	30	42	

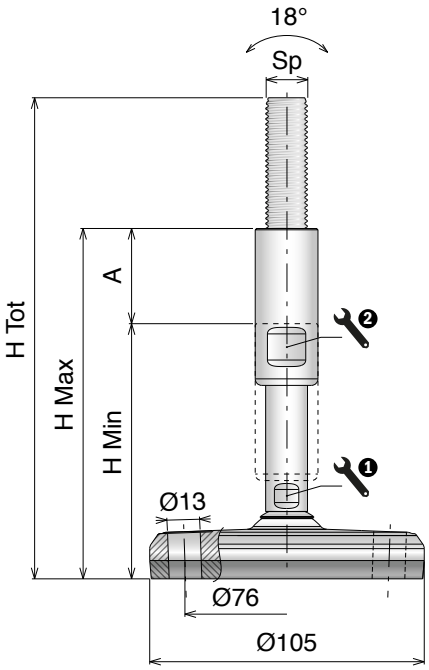

Ø105

DIAMETER (mm) | HIGH LOAD | FIXING POINT x2 | ANTI-SLIP

Art-Nr.	Sp	H Tot (mm)	H Min (mm)	H Max (mm)	A (mm)	1 (mm)	2 (mm)	Load (N)
902641	M12	184,5	104,5	149,5	45	10	17	12.000
902642		234,5	134,5	199,5	65	10	17	
902643	M16	184,5	104,5	149,5	45	13	19	30.000
902644		234,5	134,5	199,5	65	13	19	
902645	M20	184,5	104,5	149,5	45	17	24	45.000
902646		234,5	134,5	199,5	65	17	24	
902647	M24	184,5	104,5	149,5	45	19	30	70.000
902648		234,5	134,5	199,5	65	19	30	
902649	M30	184,5	104,5	149,5	45	24	36	100.000
902650		234,5	134,5	199,5	65	24	36	
902651		294,5	194,5	259,5	65	24	36	
902652	M36	184,5	104,5	149,5	45	30	42	120.000
902653		234,5	134,5	199,5	65	30	42	
902654		294,5	194,5	259,5	65	30	42	

Core product range of Easy Clean Levelling Feet can be found here.

Core product range
Available from stock in Leicester
Easy Available from stock in Italy
Standard Produced to order in Italy

Movex

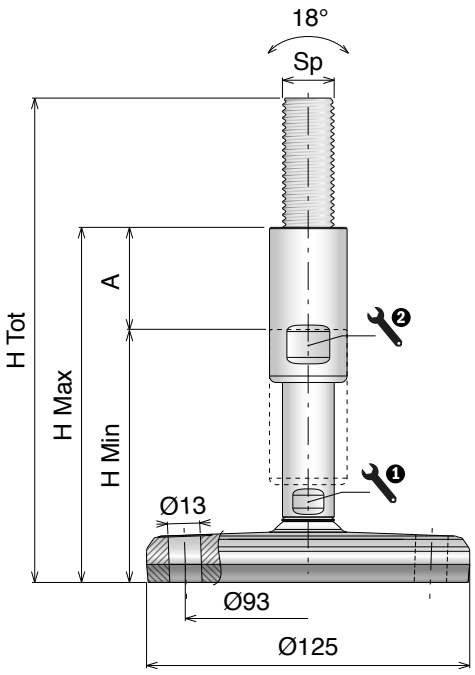

Ø125
DIAMETER (mm) — HIGH LOAD — FIXING POINT x2 — ANTI-SLIP

Art-Nr.	Sp	H Tot (mm)	H Min (mm)	H Max (mm)	A (mm)	① (mm)	② (mm)	Load (N)
902655	M12	184,5	104,5	149,5	45	10	17	12.000
902656		234,5	134,5	199,5	65	10	17	
902657	M16	184,5	104,5	149,5	45	13	19	30.000
902658		234,5	134,5	199,5	65	13	19	
902659	M20	184,5	104,5	149,5	45	17	24	45.000
902660		234,5	134,5	199,5	65	17	24	
902661	M24	184,5	104,5	149,5	45	19	30	70.000
902662		234,5	134,5	199,5	65	19	30	
902663	M30	184,5	104,5	149,5	45	24	36	100.000
902664		234,5	134,5	199,5	65	24	36	
902665		294,5	194,5	259,5	65	24	36	
902666	M36	184,5	104,5	149,5	45	30	42	130.000
902667		234,5	134,5	199,5	65	30	42	
902668		294,5	194,5	259,5	65	30	42	

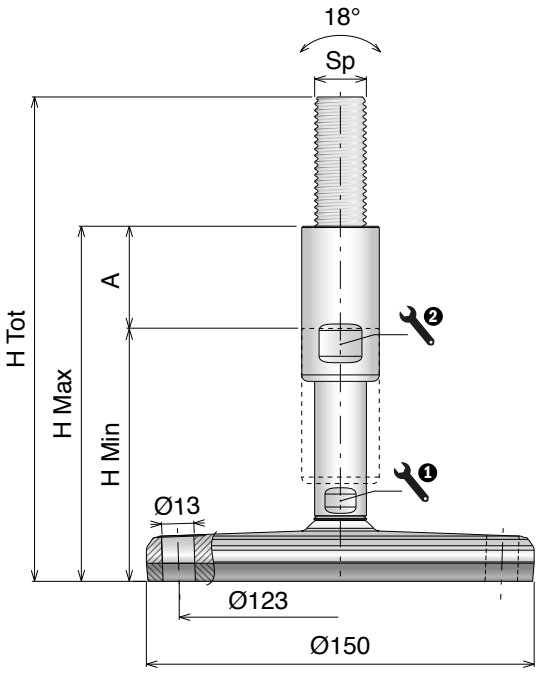

Ø150
DIAMETER (mm) — HIGH LOAD — FIXING POINT x2 — ANTI-SLIP

Art-Nr.	Sp	H Tot (mm)	H Min (mm)	H Max (mm)	A (mm)	① (mm)	② (mm)	Load (N)
902669	M12	184,5	104,5	149,5	45	10	17	12.000
902670		234,5	134,5	199,5	65	10	17	
902671	M16	184,5	104,5	149,5	45	13	19	30.000
902672		234,5	134,5	199,5	65	13	19	
902673	M20	184,5	104,5	149,5	45	17	24	45.000
902674		234,5	134,5	199,5	65	17	24	
902675	M24	184,5	104,5	149,5	45	19	30	70.000
902676		234,5	134,5	199,5	65	19	30	
902677	M30	184,5	104,5	149,5	45	24	36	100.000
902678		234,5	134,5	199,5	65	24	36	
902679		294,5	194,5	259,5	65	24	36	
902680	M36	184,5	104,5	149,5	45	30	42	150.000
902681		234,5	134,5	199,5	65	30	42	
902682		294,5	194,5	259,5	65	30	42	

Core product range of Easy Clean Levelling Feet can be found here.

S400B HEAVY-SPLIT

Piedi di livellamento / *Leveling feet* / *Nivellierfüße*

On request vulcanized rubber can be provided white or blue and spindle can be made in AISI 316.

Materiale / *Material* / *Materialien:*
Base, stelo e boccola: Acciaio inox
Base plate, spindle and cover: Stainless steel
Fussplatte, Spindel und Hülse: Edelstahl

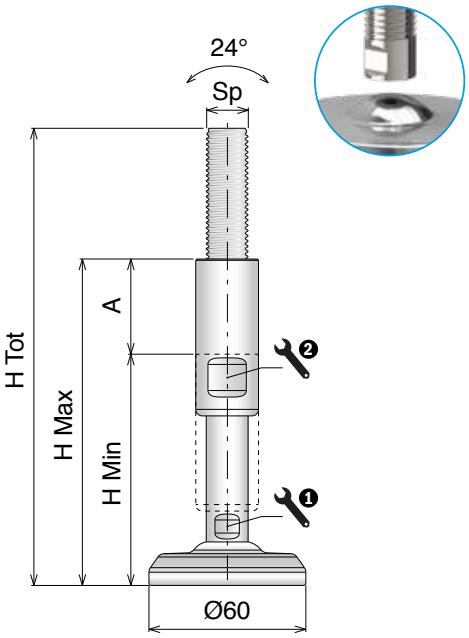

Ø 60

DIAMETER (mm)

HIGH LOAD SLIT VERSION

Art-Nr.	Sp	H Tot (mm)	H Min (mm)	H Max (mm)	A (mm)	1 (mm)	2 (mm)	Load (N)
902683	M12	176,5	96,5	141,5	45	10	17	12.000
902684		226,5	126,5	191,5	65	10	17	
902685	M16	176,5	96,5	141,5	45	13	19	30.000
902686		226,5	126,5	191,5	65	13	19	
902687	M20	176,5	96,5	141,5	45	17	24	45.000
902688		226,5	126,5	191,5	65	17	24	
902689	M24	176,5	96,5	141,5	45	19	30	60.000
902690		226,5	126,5	191,5	65	19	30	
902691	M30	176,5	96,5	141,5	45	24	36	60.000
902692		226,5	126,5	191,5	65	24	36	
902693		286,5	186,5	251,5	65	24	36	
902694	M36	176,5	96,5	141,5	45	30	42	60.000
902695		226,5	126,5	191,5	65	30	42	
902696		286,5	186,5	251,5	65	30	42	

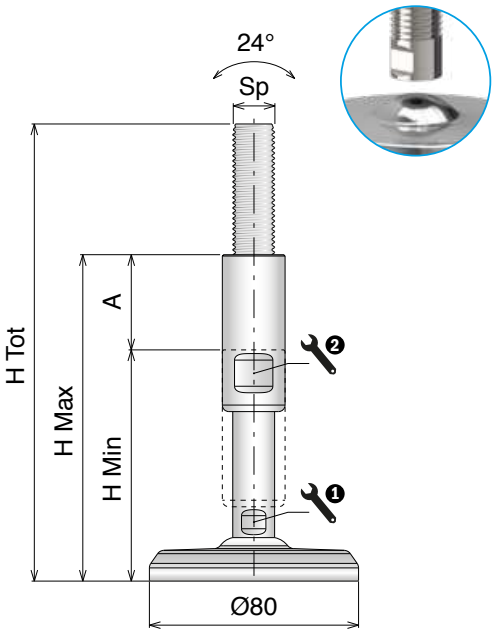

Ø 80

DIAMETER (mm)

HIGH LOAD SLIT VERSION

Art-Nr.	Sp	H Tot (mm)	H Min (mm)	H Max (mm)	A (mm)	1 (mm)	2 (mm)	Load (N)
902697	M12	176,5	97,5	142,5	45	10	17	12.000
902698		226,5	127,5	192,5	65	10	17	
902699	M16	176,5	96,5	141,5	45	13	19	30.000
902700		226,5	126,5	191,5	65	13	19	
902701	M20	176,5	96,5	141,5	45	17	24	45.000
902702		226,5	126,5	191,5	65	17	24	
902703	M24	176,5	96,5	141,5	45	19	30	70.000
902704		226,5	126,5	191,5	65	19	30	
902705	M30	176,5	96,5	141,5	45	24	36	80.000
902706		226,5	126,5	191,5	65	24	36	
902707		286,5	186,5	251,5	65	24	36	
902708	M36	176,5	96,5	141,5	45	30	42	80.000
902709		226,5	126,5	191,5	65	30	42	
902710		286,5	186,5	251,5	65	30	42	

Core product range of Easy Clean Levelling Feet can be found here.

Oadby Core product range
Oadby Available from stock in Leicester
Easy Available from stock in Italy
Standard Produced to order in Italy

Movex

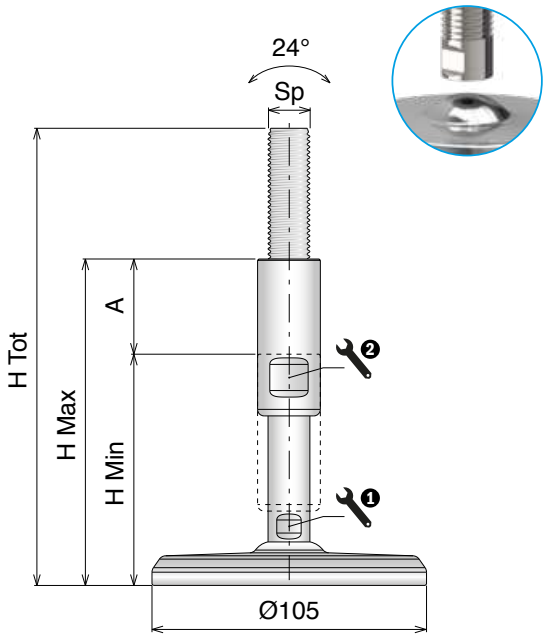

Ø105
DIAMETER (mm)

HIGH LOAD SLIT VERSION

Art-Nr.	Sp	H Tot (mm)	H Min (mm)	H Max (mm)	A (mm)	1 (mm)	2 (mm)	Load (N)
902711	M12	176,5	96,5	141,5	45	10	17	12.000
902712		226,5	126,5	191,5	65	10	17	
902713	M16	176,5	96,5	141,5	45	13	19	30.000
902714		226,5	126,5	191,5	65	13	19	
902715	M20	176,5	96,5	141,5	45	17	24	45.000
902716		226,5	126,5	191,5	65	17	24	
902717	M24	176,5	96,5	141,5	45	19	30	70.000
902718		226,5	126,5	191,5	65	19	30	
902719	M30	176,5	96,5	141,5	45	24	36	100.000
902720		226,5	126,5	191,5	65	24	36	
902721		286,5	186,5	251,5	65	24	36	
902722	M36	176,5	96,5	141,5	45	30	42	120.000
902723		226,5	126,5	191,5	65	30	42	
902724		286,5	186,5	251,5	65	30	42	

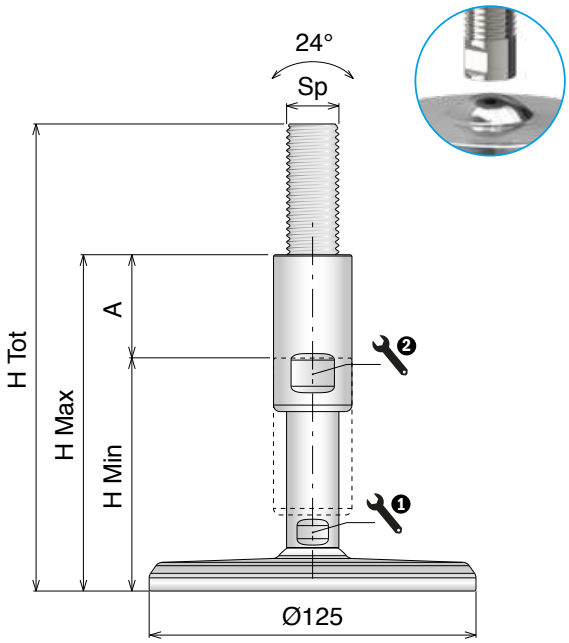

Ø125
DIAMETER (mm)

HIGH LOAD SLIT VERSION

Art-Nr.	Sp	H Tot (mm)	H Min (mm)	H Max (mm)	A (mm)	1 (mm)	2 (mm)	Load (N)
902725	M12	176,5	96,5	141,5	45	10	17	12.000
902726		226,5	126,5	191,5	65	10	17	
902727	M16	176,5	96,5	141,5	45	13	19	30.000
902728		226,5	126,5	191,5	65	13	19	
902729	M20	176,5	96,5	141,5	45	17	24	45.000
902730		226,5	126,5	191,5	65	17	24	
902731	M24	176,5	96,5	141,5	45	19	30	70.000
902732		226,5	126,5	191,5	65	19	30	
902733	M30	176,5	96,5	141,5	45	24	36	100.000
902734		226,5	126,5	191,5	65	24	36	
902735		286,5	186,5	251,5	65	24	36	
902736	M36	176,5	96,5	141,5	45	30	42	130.000
902737		226,5	126,5	191,5	65	30	42	
902738		286,5	186,5	251,5	65	30	42	

Core product range of Easy Clean Levelling Feet can be found here.

S400B HEAVY-SPLIT

Piedi di livellamento / *Leveling feet* / *Nivellierfüße*

On request vulcanized rubber can be provided white or blue and spindle can be made in AISI 316.

Materiale / *Material* / *Materialien:*
Base, stelo e boccola: Acciaio inox
Base plate, spindle and cover: Stainless steel
Fussplatte, Spindel und Hülse: Edelstahl

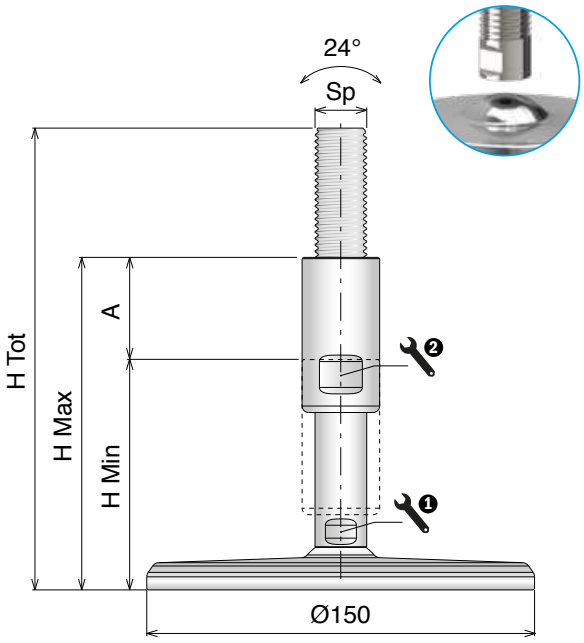

Ø150

DIAMETER (mm) — HIGH LOAD — SLIT VERSION

Art-Nr.	Sp	H Tot (mm)	H Min (mm)	H Max (mm)	A (mm)	1 (mm)	2 (mm)	Load (N)
902739	M12	176,5	96,5	141,5	45	10	17	12.000
902740		226,5	126,5	191,5	65	10	17	
902741	M16	176,5	96,5	141,5	45	13	19	30.000
902742		226,5	126,5	191,5	65	13	19	
902743	M20	176,5	96,5	141,5	45	17	24	45.000
902744		226,5	126,5	191,5	65	17	24	
902745	M24	176,5	96,5	141,5	45	19	30	70.000
902746		226,5	126,5	191,5	65	19	30	
902747	M30	176,5	96,5	141,5	45	24	36	100.000
902748		226,5	126,5	191,5	65	24	36	
902749		286,5	186,5	251,5	65	24	36	
902750	M36	176,5	96,5	141,5	45	30	42	150.000
902751		226,5	126,5	191,5	65	30	42	
902752		286,5	186,5	251,5	65	30	42	

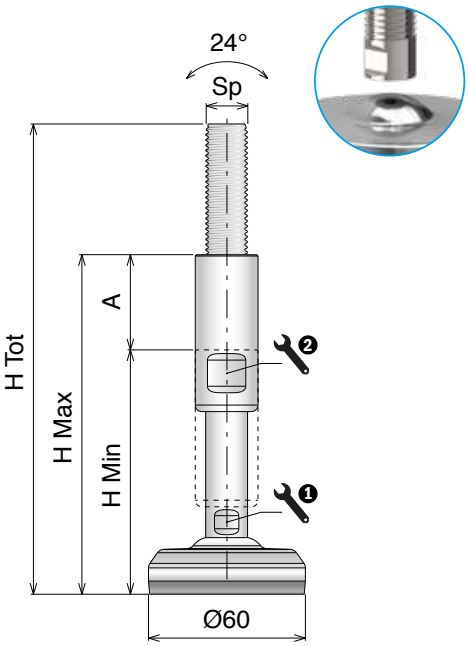

Ø60

DIAMETER (mm) — HIGH LOAD — SLIT VERSION — ANTI-SLIP

Art-Nr.	Sp	H Tot (mm)	H Min (mm)	H Max (mm)	A (mm)	1 (mm)	2 (mm)	Load (N)
902753	M12	181,5	101,5	146,5	45	10	17	12.000
902754		231,5	131,5	196,5	65	10	17	
902755	M16	181,5	101,5	146,5	45	13	19	30.000
902756		231,5	131,5	196,5	65	13	19	
902757	M20	181,5	101,5	146,5	45	17	24	45.000
902758		231,5	131,5	196,5	65	17	24	
902759	M24	181,5	101,5	146,5	45	19	30	60.000
902760		231,5	131,5	196,5	65	19	30	
902761	M30	181,5	101,5	146,5	45	24	36	60.000
902762		231,5	131,5	196,5	65	24	36	
902763		291,5	191,5	256,5	65	24	36	
902764	M36	181,5	101,5	146,5	45	30	42	60.000
902765		231,5	131,5	196,5	65	30	42	
902766		291,5	191,5	256,5	65	30	42	

Core product range of Easy Clean Levelling Feet can be found here.

Core product range
Available from stock in Leicester
Easy Available from stock in Italy
Standard Produced to order in Italy

Movex

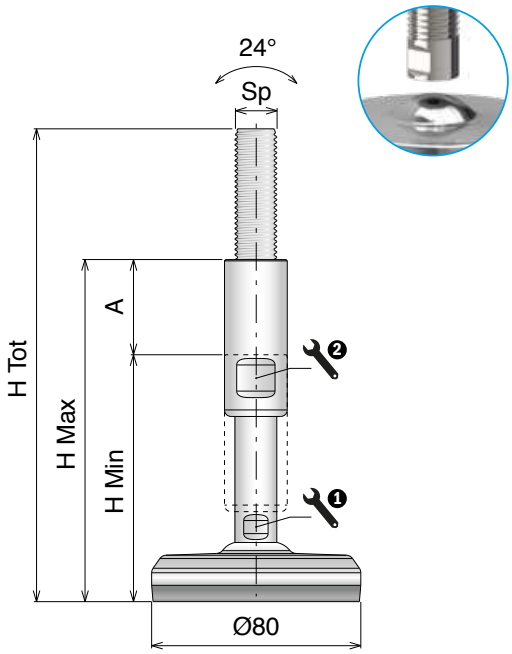

Ø80
DIAMETER (mm)

HIGH LOAD | SLIT VERSION | ANTI-SLIP

Art-Nr.	Sp	H Tot (mm)	H Min (mm)	H Max (mm)	A (mm)	① (mm)	② (mm)	Load (N)
902767	M12	182,5	102,5	147,5	45	10	17	12.000
902768		232,5	132,5	197,5	65	10	17	
902769	M16	182,5	102,5	147,5	45	13	19	30.000
902770		232,5	132,5	197,5	65	13	19	
902771	M20	182,5	102,5	147,5	45	17	24	45.000
902772		232,5	132,5	197,5	65	17	24	
902773	M24	182,5	102,5	147,5	45	19	30	70.000
902774		232,5	132,5	197,5	65	19	30	
902775	M30	182,5	102,5	147,5	45	24	36	80.000
902776		232,5	132,5	197,5	65	24	36	
902777		292,5	192,5	257,5	65	24	36	
902778	M36	182,5	102,5	147,5	45	30	42	80.000
902779		232,5	132,5	197,5	65	30	42	
902780		292,5	192,5	257,5	65	30	42	

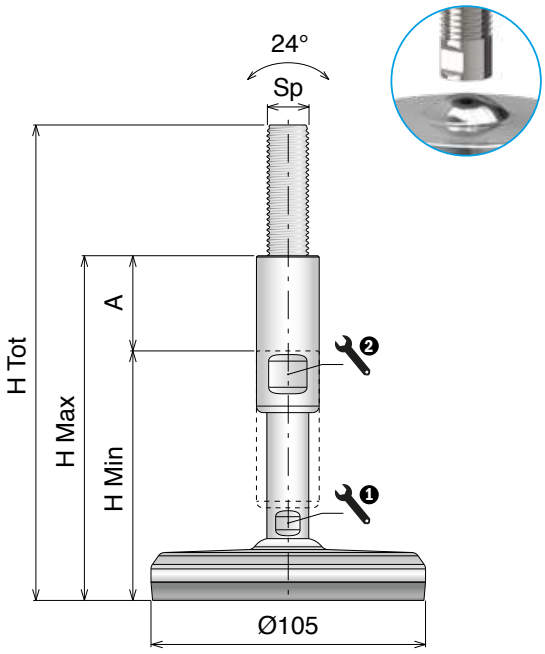

Ø105
DIAMETER (mm)

HIGH LOAD | SLIT VERSION | ANTI-SLIP

Art-Nr.	Sp	H Tot (mm)	H Min (mm)	H Max (mm)	A (mm)	① (mm)	② (mm)	Load (N)
902781	M12	183,5	103,5	148,5	45	10	17	12.000
902782		233,5	133,5	198,5	65	10	17	
902783	M16	183,5	103,5	148,5	45	13	19	30.000
902784		233,5	133,5	198,5	65	13	19	
902785	M20	183,5	103,5	148,5	45	17	24	45.000
902786		233,5	133,5	198,5	65	17	24	
902787	M24	183,5	103,5	148,5	45	19	30	70.000
902788		233,5	133,5	198,5	65	19	30	
902789	M30	183,5	103,5	148,5	45	24	36	100.000
902790		233,5	133,5	198,5	65	24	36	
902791		293,5	193,5	258,5	65	24	36	
902792	M36	183,5	103,5	148,5	45	30	42	120.000
902793		233,5	133,5	198,5	65	30	42	
902794		293,5	193,5	258,5	65	30	42	

Core product range of Easy Clean Levelling Feet can be found here.

S400B HEAVY-SPLIT

Piedi di livellamento / *Leveling feet* / *Nivellierfüße*

On request vulcanized rubber can be provided white or blue and spindle can be made in AISI 316.

Materiale / *Material* / *Materialien:*
Base, stelo e boccola: Acciaio inox
Base plate, spindle and cover: Stainless steel
Fussplatte, Spindel und Hülse: Edelstahl

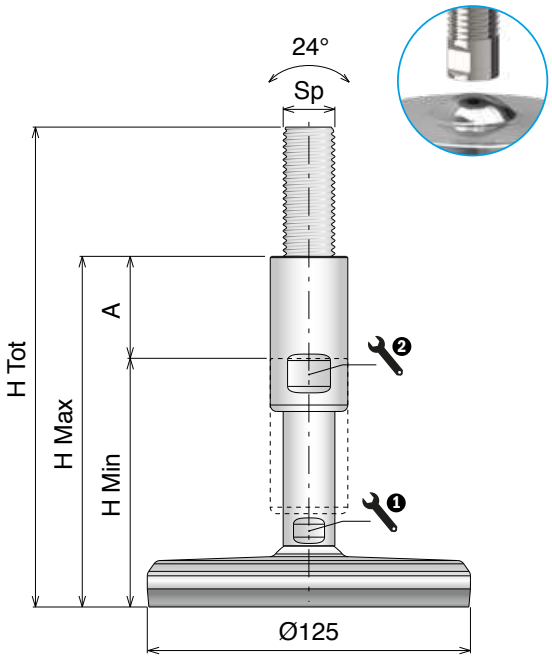

Ø125

DIAMETER (mm) — HIGH LOAD — SLIT VERSION — ANTI-SLIP

Art-Nr.	Sp	H Tot (mm)	H Min (mm)	H Max (mm)	A (mm)	1 (mm)	2 (mm)	Load (N)
902795	M12	183,5	103,5	148,5	45	10	17	12.000
902796		233,5	133,5	198,5	65	10	17	
902797	M16	183,5	103,5	148,5	45	13	19	30.000
902798		233,5	133,5	198,5	65	13	19	
902799	M20	233,5	103,5	148,5	45	17	24	45.000
902800		234,5	133,5	198,5	65	17	24	
902801	M24	183,5	103,5	148,5	45	19	30	70.000
902802		233,5	133,5	198,5	65	19	30	
902803	M30	183,5	103,5	148,5	45	24	36	100.000
902804		233,5	133,5	198,5	65	24	36	
902805		293,5	193,5	258,5	65	24	36	
902806	M36	183,5	103,5	148,5	45	30	42	130.000
902807		233,5	133,5	198,5	65	30	42	
902808		293,5	193,5	258,5	65	30	42	

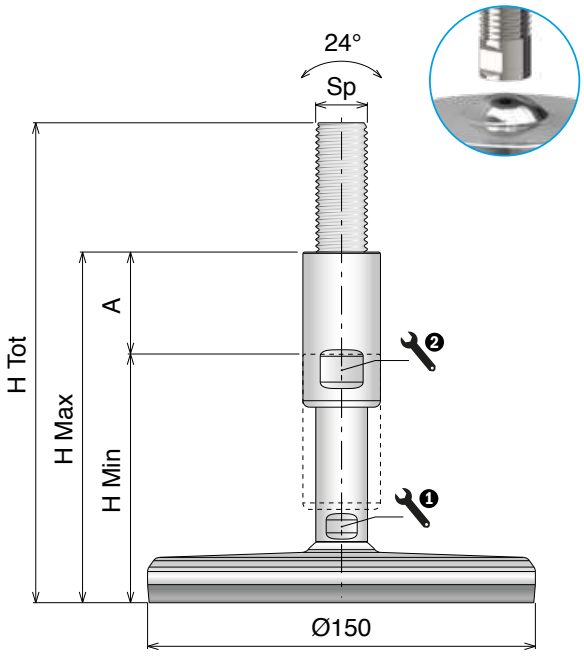

Ø150

DIAMETER (mm) — HIGH LOAD — SLIT VERSION — ANTI-SLIP

Art-Nr.	Sp	H Tot (mm)	H Min (mm)	H Max (mm)	A (mm)	1 (mm)	2 (mm)	Load (N)
902809	M12	183,5	103,5	148,5	45	10	17	12.000
902810		233,5	133,5	198,5	65	10	17	
902811	M16	183,5	103,5	148,5	45	13	19	30.000
902812		233,5	133,5	198,5	65	13	19	
902813	M20	183,5	103,5	148,5	45	17	24	45.000
902814		233,5	133,5	198,5	65	17	24	
902815	M24	183,5	103,5	148,5	45	19	30	70.000
902816		233,5	133,5	198,5	65	19	30	
902817	M30	183,5	103,5	148,5	45	24	36	100.000
902818		233,5	133,5	198,5	65	24	36	
902819		293,5	193,5	258,5	65	24	36	
902820	M36	183,5	103,5	148,5	45	30	42	150.000
902821		233,5	133,5	198,5	65	30	42	
902822		293,5	193,5	258,5	65	30	42	

Core product range of Easy Clean Levelling Feet can be found here.

Core product range
Available from stock in Leicester
Easy Available from stock in Italy
Standard Produced to order in Italy

Movex

NEW C500 Series

HYGIENIC AND CERTIFIED
STAINLESS STEEL LEVELERS

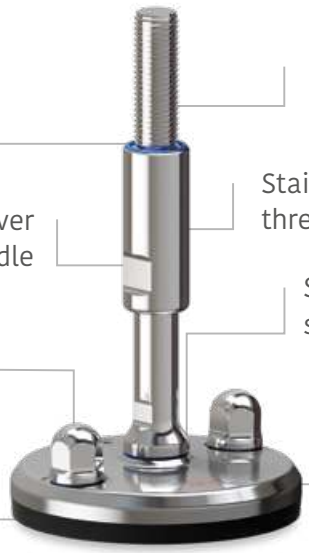

The **C500 series** is the best choice for industrial environments with critical hygienic level, like dairy, food, chemical and pharmaceutical industries, subjected to daily washing cycles.

It offers a complete protection against bacterial proliferation and guarantees reduced washing cycle time as well as self-draining surfaces able to drain external elements easier than traditional systems.

The new **C500 series** with hygienic stainless steel follows actual regulations and is approved by **3A** and **EHEDG** normative. Base, spindle and cover are produced exclusively in AISI 304, with surface finishing lower than 0,8 µm, silicon blue seals are **FDA** approved and easily detectable by industrial scanner.

HYGIENIC DESIGN
Completely sanitized and certified

***SAVING** (Energy, water, detergents)*
Fewer resources for sanitation

SUPERIOR DURABILITY
Thanks to the threaded part's cover

CLEANLINESS
Reduced washing cycle

AVAILABLE RANGE

The **C500 series** is available as following versions:

C500 Series
For standard applications, hygienic and certified.

C500 Series SPLIT
For application with higher floor slope or where separate base and spindle is required.

C500 Series HEAVY
For high load applications.

C500 Series HEAVY-SPLIT
For high load applications where the separate base and spindle is required.

Every above version offers excellent hygienic performances.

CERTIFICATIONS

The **C500 series** has 3A and EHEDG certifications, provided based on the selected type.

These certifications are released by no profit associations that protect consumers, guaranteeing products made according to the internal standards. This applies to all processes and components in contact directly or indirectly with every single food. Movex is committed to offer a high quality product in according to the most recent normative.

- Non-profit European consortium
- Regulations for food manufacturers, machine food manufactures and food raw material suppliers
- Research institutes and universities
- Government health agencies
- Approximately 45 guidelines

- Non-profit American association
- Regulations for food manufacturers, machine food manufactures and food raw material suppliers
- Public and governmental health agencies
- Over 70 guidelines

WHY CHOOSE A CERTIFIED PRODUCT?

Calculated saving

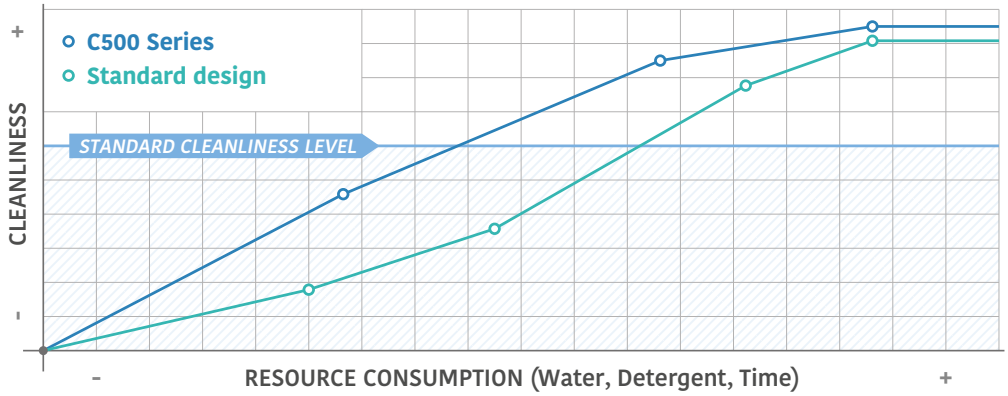

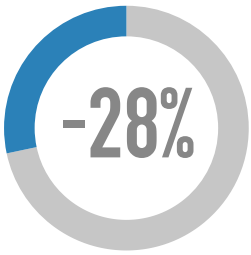

The stainless steel self-draining surfaces help the entire washing process, reducing time and resources consumption.

UV ray analysis

The real difference between a conventional leveler and the hygienic and certified **C500 series** is invisible with human eyes.

If we compare two levelers that have been subjected to the same washing process, they will both look clean and sanitized; but analyzed with UV ray, we will see that the conventional solution is still contaminated by bacteria (see picture).

C500 Series

DECLARATION OF CONFORMITY

C500, C500-HEAVY, C500-SPLIT, C500-HEAVY-SPLIT series are certified 3A and EHEDG, following product details.

FEATURES

Base, spindle and cover material:

- Stainless steel AISI 304 (1.4301) – available also in AISI 316 (1.4401) on request

Anti-slip rubber:

- NBR rubber, color black
- Hardness: 70-75 Shore-A
- Working temperature: -30°C÷110°C
- Compliant to REACH (CE 1907-2006)
- Compliant to ROHS&ROHS 2 (2002/95/EC)

Seals:

- Silicone rubber, color blue
- Hardness: 60 Shore-A
- Working temperature: -60°C÷200°C
- Compliant to FDA normative

Ref. Norms.

The **C500 series** and all its versions (**HEAVY, SPLIT** and **HEAVY-SPLIT**) are the ideal choice for all those environments where hygienic level is constantly monitored (dairy, food, chemical and pharmaceutical industries) subjected to daily washing cycles.

Self-draining surfaces with roughness lower than 0,8 µm and the 3 seals (blue silicone detectable with food scanner) placed respectively inside the cover and between the spindle and the baseplate guarantee a hermetic closure, avoiding any external parts infiltration.

Following 3A normative, levelers are properly installed when they provide a minimum clearance between the lowest part of the equipment and the floor of not less than 4.0 in. (102 mm) when the equipment base outlines an area in which no point is more than 12.5 in. (318 mm) from the nearest edge of the base, or a clearance of at least 6 in. (152 mm) when any point is more than 12.5 in. (318 mm) from the nearest edge.

Following EHEDG normative, recommended distance between floor and machined is at least 300 mm. Levelers with fixation need to be installed always with Movex certified nuts, on the contrary the company will not guarantee certifications requirements (follow installation manual – floor fixation, provided with every delivery).

Movex supplies all certified levelers with seals (unlosable); nevertheless, the end user should always check correct seals position before proceeding with the installation (follow installation manual, provided with every delivery).

C500 levelers have great resistance to the most common industrial detergents, following material specifications, compatible with producer specifications.

For a correct execution, please always follow provided manual (maintenance and cleaning manual, included in every delivery).

NEW C500 Series

HYGIENIC AND CERTIFIED STAINLESS STEEL LEVELERS

Delivery: Easy Standard

C500

Main features:

- Overmolded self-draining baseplate in AISI 304
- Spindle and cover in AISI 304
- Blue seals for hermetic closure
- Vulcanized anti-slip NBR rubber

Other versions available:

- Single floor fixation

3-A 88-01

C500 SPLIT

Main features:

- Overmolded self-draining baseplate in AISI 304
- Spindle and cover in AISI 304
- Blue seals for hermetic closure
- Vulcanized anti-slip NBR rubber
- Separate spindle and baseplate

3-A 88-01

C500 HEAVY

Main features:

- Full machined self-draining baseplate in AISI 304
- Spindle and cover in AISI 304
- Blue seals for hermetic closure
- Vulcanized anti-slip NBR rubber

Other versions available:

- Double floor fixation

3-A 88-01 EHEDG

C500 HEAVY-SPLIT

Main features:

- Full machined self-draining baseplate in AISI 304
- Spindle and cover in AISI 304
- Blue seals for hermetic closure
- Vulcanized anti-slip NBR rubber
- Separate spindle and baseplate

3-A 88-01

The **C500 series**, with baseplate in AISI 304 stainless steel, threaded spindle with cover and hermetic seals is the best choice for industrial environments with critical hygienic level, like dairy, food, chemical and pharmaceutical industries, subjected to daily washing cycles.

The stainless steel baseplate and its particular shape guarantee an excellent cleanability, especially in critical conditions; the stainless steel cover offers 100% thread protection and avoids its exposure to external agents; the three seals (blue silicone detectable with food scanner) placed respectively inside the cover and between the spindle and the baseplate guarantee a hermetic closure, avoiding any external parts infiltration and the NBR rubber guarantees anti-slip proprieties and hermetic closure between the leveler and the floor.

Maximum compressive strength (static load) as in the table, maximum tensile strength (static load) 4.000 N (S400); 8.000 N (S400 HEAVY); NOT AVAILABLE (SPLIT and HEAVY-SPLIT).

The **C500 series** can also be combined with hygienic bolts, nuts and covers for perfect sanitation.

Accessori / Accessories / Zubehör Find out more details on page 643/644

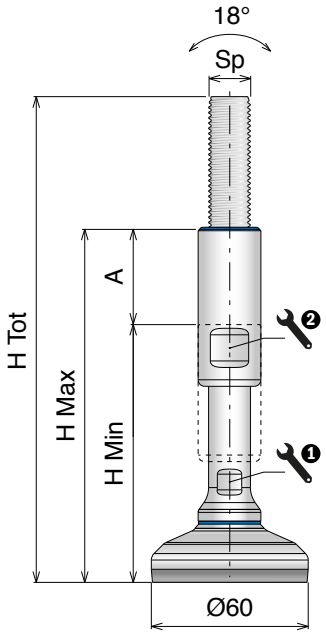

Ø60
DIAMETER (mm)

ANTI-SLIP

Art-Nr.	Sp	H Tot (mm)	H Min (mm)	H Max (mm)	A (mm)	1 (mm)	2 (mm)	Load (N)
902823	M12	185	105	150	45	10	17	4.500
902824		235	135	200	65	10	17	
902825	M16	185	105	150	45	13	19	4.500
902826		235	135	200	65	13	19	
902827	M20	185	105	150	45	17	24	4.500
902828		235	135	200	65	17	24	
902829	M24	185	105	150	45	19	30	4.500
902830		235	135	200	65	19	30	
902831	M30	185	105	150	45	24	36	4.500
902832		235	135	200	65	24	36	
902833		295	195	260	65	24	36	
902834	M36	185	105	150	45	30	42	4.500
902835		235	135	200	65	30	42	
902836		295	195	260	65	30	42	

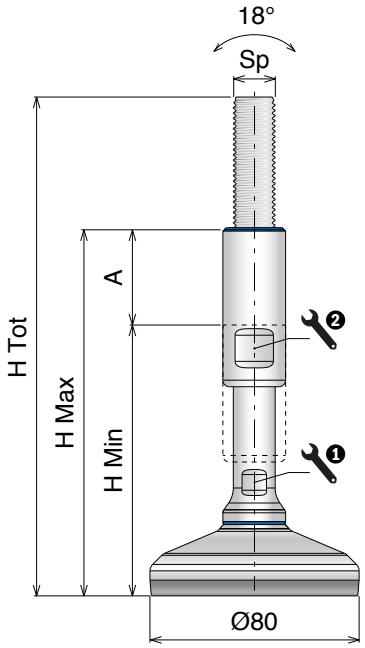

Ø80
DIAMETER (mm)

ANTI-SLIP

Art-Nr.	Sp	H Tot (mm)	H Min (mm)	H Max (mm)	A (mm)	1 (mm)	2 (mm)	Load (N)
902837	M12	190	110	155	45	10	17	12.000
902838		240	140	205	65	10	17	
902839	M16	190	110	155	45	13	19	15.000
902840		240	140	205	65	13	19	
902841	M20	190	110	155	45	17	24	15.000
902842		240	140	205	65	17	24	
902843	M24	190	110	155	45	19	30	15.000
902844		240	140	205	65	19	30	
902845	M30	190	110	155	45	24	36	15.000
902846		240	140	205	65	24	36	
902847		300	200	265	65	24	36	
902848	M36	190	110	155	45	30	42	15.000
902849		240	140	205	65	30	42	
902850		300	200	265	65	30	42	

CERTIFIED PRODUCTS
ASK FOR CERTIFICATION:
certificate@movexii.com

C500 Series

Piedi di livellamento / *Leveling feet* / *Nivellierfüße*

On request vulcanized rubber can be provided white or blue and spindle can be made in AISI 316.

Materiale / *Material* / *Materialien:*
Base, stelo, rondella e boccola: Acciaio inox
Base plate, spindle, washer and cover: Stainless steel
Fussplatte, Spindel, Scheibe und Hülse: Edelstahl

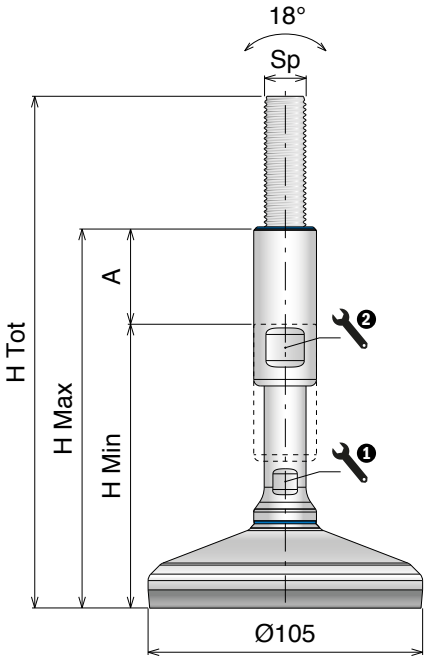

ø105

DIAMETER (mm)

ANTI-SLIP

Art-Nr.	Sp	H Tot (mm)	H Min (mm)	H Max (mm)	A (mm)	1 (mm)	2 (mm)	Load (N)
902851	M12	195	115	160	45	10	17	12.000
902852		245	145	210	65	10	17	
902853	M16	195	115	160	45	13	19	25.000
902854		245	145	210	65	13	19	
902855	M20	195	115	160	45	17	24	25.000
902856		245	145	210	65	17	24	
902857	M24	195	115	160	45	19	30	25.000
902858		245	145	210	65	19	30	
902859	M30	195	115	160	45	24	36	25.000
902860		245	145	210	65	24	36	
902861		305	205	270	65	24	36	
902862	M36	195	115	160	45	30	42	25.000
902863		245	145	210	65	30	42	
902864		305	205	270	65	30	42	

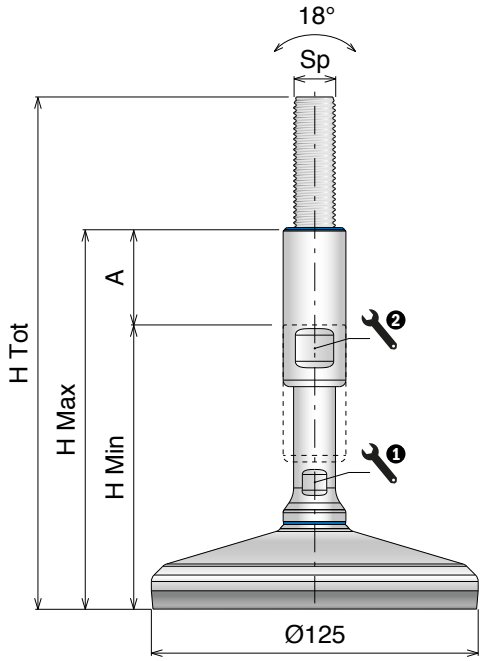

ø125

DIAMETER (mm)

ANTI-SLIP

Art-Nr.	Sp	H Tot (mm)	H Min (mm)	H Max (mm)	A (mm)	1 (mm)	2 (mm)	Load (N)
902865	M12	195	115	160	45	10	17	12.000
902866		245	145	210	65	10	17	
902867	M16	195	115	160	45	13	19	30.000
902868		245	145	210	65	13	19	
902869	M20	195	115	160	45	17	24	30.000
902870		245	145	210	65	17	24	
902871	M24	195	115	160	45	19	30	30.000
902872		245	145	210	65	19	30	
902873	M30	195	115	160	45	24	36	30.000
902874		245	145	210	65	24	36	
902875		305	205	270	65	24	36	
902876	M36	195	115	160	45	30	42	30.000
902877		245	145	210	65	30	42	
902878		305	205	270	65	30	42	

CERTIFIED PRODUCTS
ASK FOR CERTIFICATION:
certificate@movexii.com

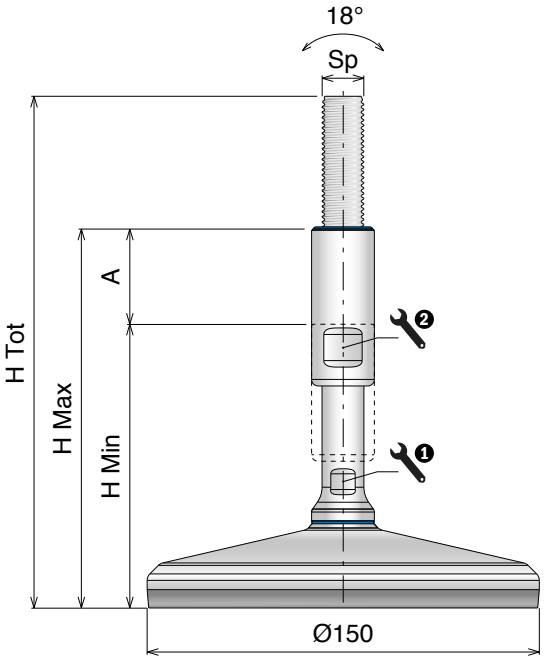

Ø150
DIAMETER (mm)

ANTI-SLIP

Art-Nr.	Sp	H Tot (mm)	H Min (mm)	H Max (mm)	A (mm)	1 (mm)	2 (mm)	Load (N)
902879	M12	195	115	160	45	10	17	12.000
902880		245	145	210	65	10	17	
902881	M16	195	115	160	45	13	19	30.000
902882		245	145	210	65	13	19	
902883	M20	195	115	160	45	17	24	45.000
902884		245	145	210	65	17	24	
902885	M24	195	115	160	45	19	30	45.000
902886		245	145	210	65	19	30	
902887	M30	195	115	160	45	24	36	45.000
902888		245	145	210	65	24	36	
902889		305	205	270	65	24	36	
902890	M36	195	115	160	45	30	42	45.000
902891		245	145	210	65	30	42	
902892		305	205	270	65	30	42	

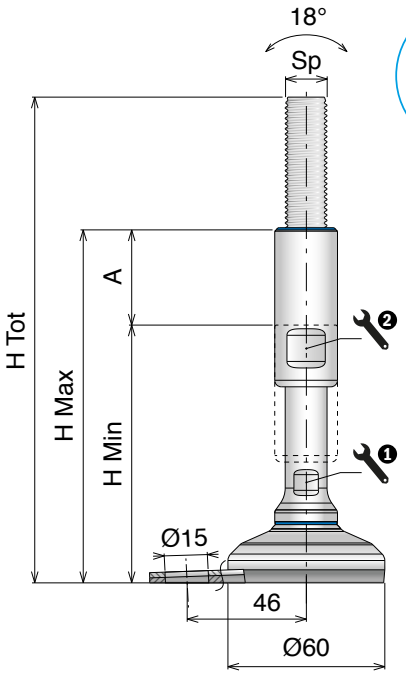

Nut M12
Hygienic & certified
903238

Ø60
DIAMETER (mm)

ANTI-SLIP

FIXING POINT x1

Art-Nr.	Sp	H Tot (mm)	H Min (mm)	H Max (mm)	A (mm)	1 (mm)	2 (mm)	Load (N)
902893	M12	185	105	150	45	10	17	4.500
902894		235	135	200	65	10	17	
902895	M16	185	105	150	45	13	19	4.500
902896		235	135	200	65	13	19	
902897	M20	185	105	150	45	17	24	4.500
902898		235	135	200	65	17	24	
902899	M24	185	105	150	45	19	30	4.500
902900		235	135	200	65	19	30	
902901	M30	185	105	150	45	24	36	4.500
902902		235	135	200	65	24	36	
902903		295	195	260	65	24	36	
902904	M36	185	105	150	45	30	42	4.500
902905		235	135	200	65	30	42	
902906		295	195	260	65	30	42	

CERTIFIED PRODUCTS
ASK FOR CERTIFICATION:
certificate@movexii.com

C500 Series

Piedi di livellamento / *Leveling feet* / *Nivellierfüße*

On request vulcanized rubber can be provided white or blue and spindle can be made in AISI 316.

Materiale / *Material* / *Materialien:*
Base, stelo, rondella e boccola: Acciaio inox
Base plate, spindle, washer and cover: Stainless steel
Fussplatte, Spindel, Scheibe und Hülse: Edelstahl

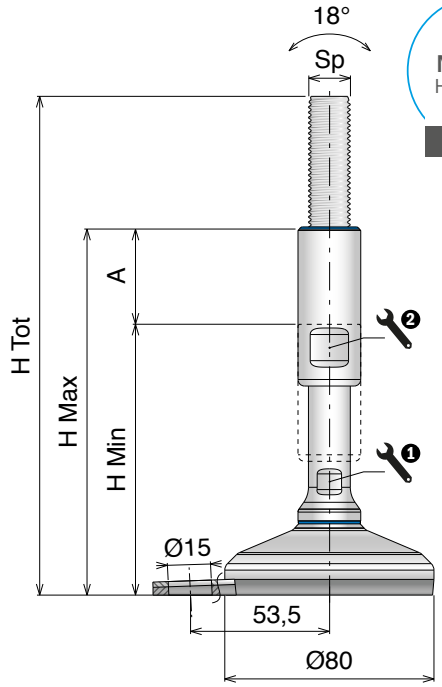

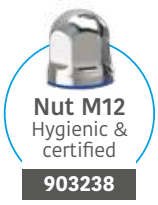

Ø80

DIAMETER (mm)

ANTI-SLIP

FIXING POINT x1

Art-Nr.	Sp	H Tot (mm)	H Min (mm)	H Max (mm)	A (mm)	1 (mm)	2 (mm)	Load (N)
902907	M12	190	110	155	45	10	17	12.000
902908		240	140	205	65	10	17	
902909	M16	190	110	155	45	13	19	15.000
902910		240	140	205	65	13	19	
902911	M20	190	110	155	45	17	24	15.000
902912		240	140	205	65	17	24	
902913	M24	190	110	155	45	19	30	15.000
902914		240	140	205	65	19	30	
902915	M30	190	110	155	45	24	36	15.000
902916		240	140	205	65	24	36	
902917		300	200	265	65	24	36	
902918	M36	190	110	155	45	30	42	15.000
902919		240	140	205	65	30	42	
902920		300	200	265	65	30	42	

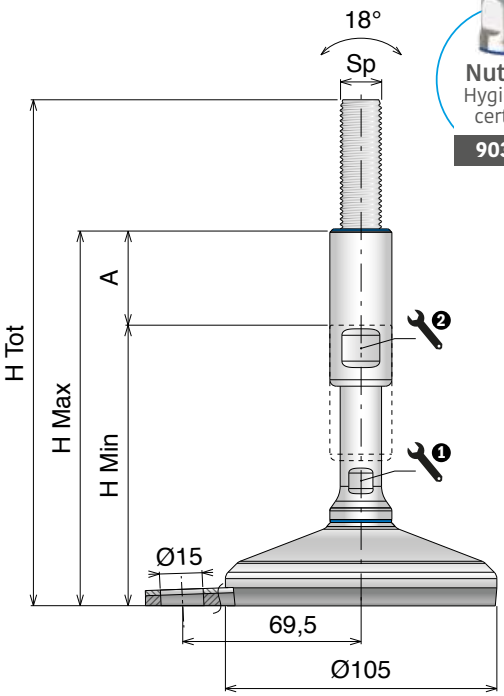

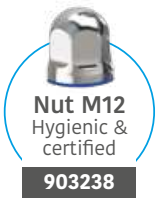

Ø105

DIAMETER (mm)

ANTI-SLIP

FIXING POINT x1

Art-Nr.	Sp	H Tot (mm)	H Min (mm)	H Max (mm)	A (mm)	1 (mm)	2 (mm)	Load (N)
902921	M12	195	115	160	45	10	17	12.000
902922		245	145	210	65	10	17	
902923	M16	195	115	160	45	13	19	25.000
902924		245	145	210	65	13	19	
902925	M20	195	115	160	45	17	24	25.000
902926		245	145	210	65	17	24	
902927	M24	195	115	160	45	19	30	25.000
902928		245	145	210	65	19	30	
902929	M30	195	115	160	45	24	36	25.000
902930		245	145	210	65	24	36	
902931		305	205	270	65	24	36	
902932	M36	195	115	160	45	30	42	25.000
902933		245	145	210	65	30	42	
902934		305	205	270	65	30	42	

CERTIFIED PRODUCTS
ASK FOR CERTIFICATION:
certificate@movexii.com

Oadby Core product range
Oadby Available from stock in Leicester
Easy Available from stock in Italy
Standard Produced to order in Italy

Movex

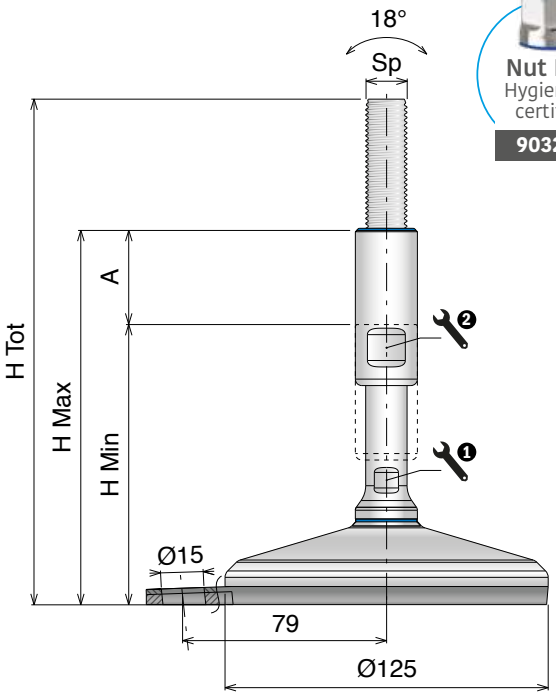

Nut M12
Hygienic & certified
903238

Ø125
DIAMETER (mm)

ANTI-SLIP

X1
FIXING POINT

Art-Nr.	Sp	H Tot (mm)	H Min (mm)	H Max (mm)	A (mm)	① (mm)	② (mm)	Load (N)
902935	M12	195	115	160	45	10	17	12.000
902936		245	145	210	65	10	17	
902937	M16	195	115	160	45	13	19	30.000
902938		245	145	210	65	13	19	
902939	M20	195	115	160	45	17	24	30.000
902940		245	145	210	65	17	24	
902941	M24	195	115	160	45	19	30	30.000
902942		245	145	210	65	19	30	
902943	M30	195	115	160	45	24	36	30.000
902944		245	145	210	65	24	36	
902945		305	205	270	65	24	36	
902946	M36	195	115	160	45	30	42	30.000
902947		245	145	210	65	30	42	
902948		305	205	270	65	30	42	

CERTIFIED PRODUCTS
ASK FOR CERTIFICATION:
certificate@movexii.com

C500 SPLIT

Piedi di livellamento / *Leveling feet* / *Nivellierfüße*

On request vulcanized rubber can be provided white or blue and spindle can be made in AISI 316.

Materiale / *Material* / *Materialien:*
Base, stelo e boccola: Acciaio inox
Base plate, spindle and cover: Stainless steel
Fussplatte, Spindel und Hülse: Edelstahl

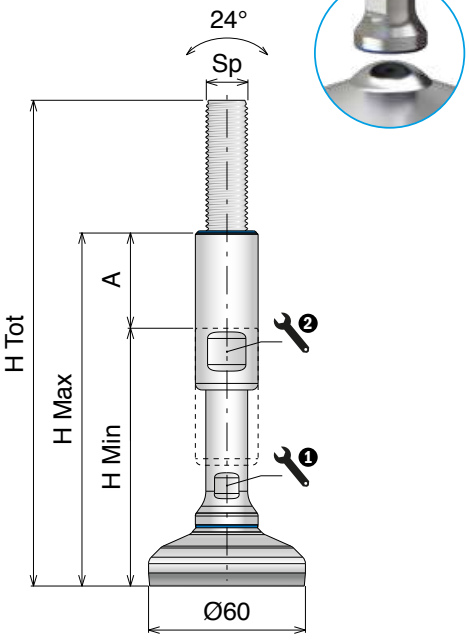

ø 60

DIAMETER (mm)

SLIT VERSION ANTI-SLIP

Art-Nr.	Sp	H Tot (mm)	H Min (mm)	H Max (mm)	A (mm)	1 (mm)	2 (mm)	Load (N)
902949	M12	185	105	150	45	10	17	4.500
902950		235	135	200	65	10	17	
902951	M16	185	105	150	45	13	19	4.500
902952		235	135	200	65	13	19	
902953	M20	185	105	150	45	17	24	4.500
902954		235	135	200	65	17	24	
902955	M24	185	105	150	45	19	30	4.500
902956		235	135	200	65	19	30	
902957	M30	185	105	150	45	24	36	4.500
902958		235	135	200	65	24	36	
902959		295	195	260	65	24	36	
902960	M36	185	105	150	45	30	42	4.500
902961		235	135	200	65	30	42	
902962		295	195	260	65	30	42	

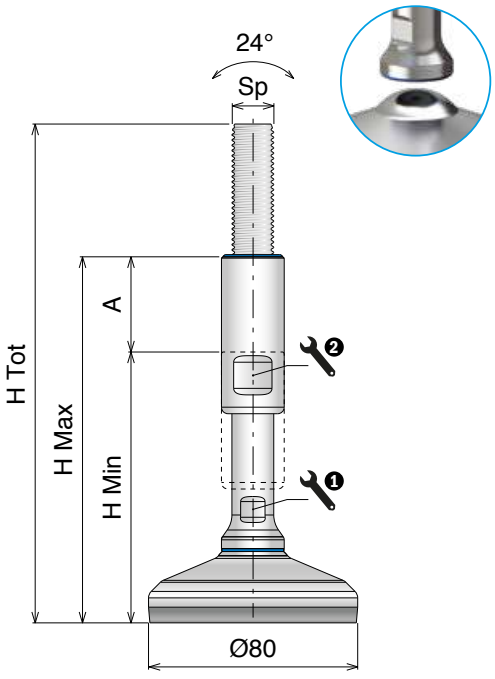

ø 80

DIAMETER (mm)

SLIT VERSION ANTI-SLIP

Art-Nr.	Sp	H Tot (mm)	H Min (mm)	H Max (mm)	A (mm)	1 (mm)	2 (mm)	Load (N)
902963	M12	190	110	155	45	10	17	12.000
902964		240	140	205	65	10	17	
902965	M16	190	110	155	45	13	19	15.000
902966		240	140	205	65	13	19	
902967	M20	190	110	155	45	17	24	15.000
902968		240	140	205	65	17	24	
902969	M24	190	110	155	45	19	30	15.000
902970		240	140	205	65	19	30	
902971	M30	190	110	155	45	24	36	15.000
902972		240	140	205	65	24	36	
902973		300	200	265	65	24	36	
902974	M36	190	110	155	45	30	42	15.000
902975		240	140	205	65	30	42	
902976		300	200	265	65	30	42	

CERTIFIED PRODUCTS
ASK FOR CERTIFICATION:
certificate@movexii.com

Oadby Core product range
Oadby Available from stock in Leicester
Easy Available from stock in Italy
Standard Produced to order in Italy

Movex

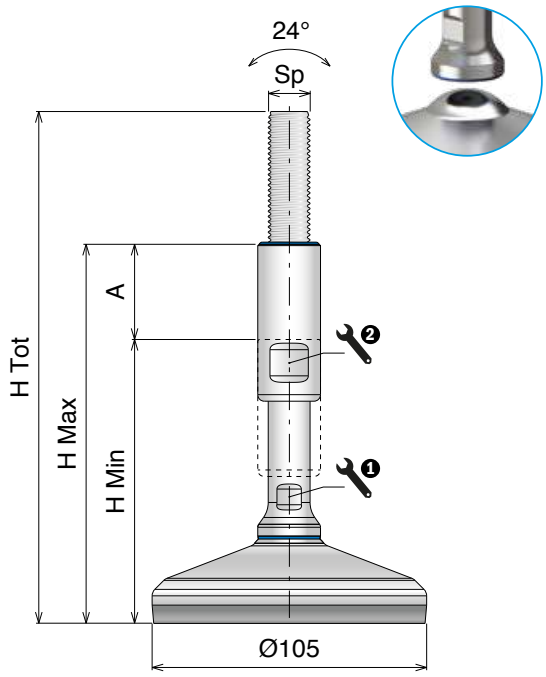

Ø105
DIAMETER (mm)

SLIT VERSION ANTI-SLIP

Art-Nr.	Sp	H Tot (mm)	H Min (mm)	H Max (mm)	A (mm)	1 (mm)	2 (mm)	Load (N)
902977	M12	195	115	160	45	10	17	12.000
902978		245	145	210	65	10	17	
902979	M16	195	115	160	45	13	19	25.000
902980		245	145	210	65	13	19	
902981	M20	195	115	160	45	17	24	25.000
902982		245	145	210	65	17	24	
902983	M24	195	115	160	45	19	30	25.000
902984		245	145	210	65	19	30	
902985	M30	195	115	160	45	24	36	25.000
902986		245	145	210	65	24	36	
902987		305	205	270	65	24	36	
902988	M36	195	115	160	45	30	42	25.000
902989		245	145	210	65	30	42	
902990		305	205	270	65	30	42	

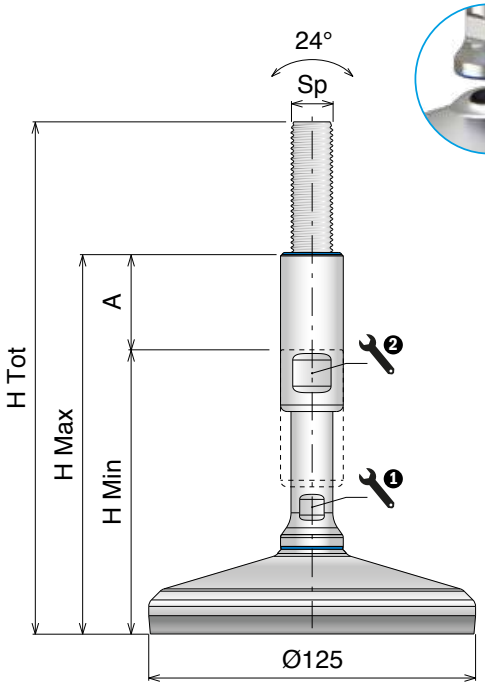

Ø125
DIAMETER (mm)

SLIT VERSION ANTI-SLIP

Art-Nr.	Sp	H Tot (mm)	H Min (mm)	H Max (mm)	A (mm)	1 (mm)	2 (mm)	Load (N)
902991	M12	195	115	160	45	10	17	12.000
902992		245	145	210	65	10	17	
902993	M16	195	115	160	45	13	19	30.000
902994		245	145	210	65	13	19	
902995	M20	195	115	160	45	17	24	30.000
902996		245	145	210	65	17	24	
902997	M24	195	115	160	45	19	30	30.000
902998		245	145	210	65	19	30	
902999	M30	195	115	160	45	24	36	30.000
903000		245	145	210	65	24	36	
903001		305	205	270	65	24	36	
903002	M36	195	115	160	45	30	42	30.000
903003		245	145	210	65	30	42	
903004		305	205	270	65	30	42	

CERTIFIED PRODUCTS
ASK FOR CERTIFICATION:
certificate@movexii.com

C500 SPLIT

Piedi di livellamento / *Leveling feet* / *Nivellierfüße*

On request vulcanized rubber can be provided white or blue and spindle can be made in AISI 316.

Materiale / *Material* / *Materialien:*
Base, stelo e boccola: Acciaio inox
Base plate, spindle and cover: Stainless steel
Fussplatte, Spindel und Hülse: Edelstahl

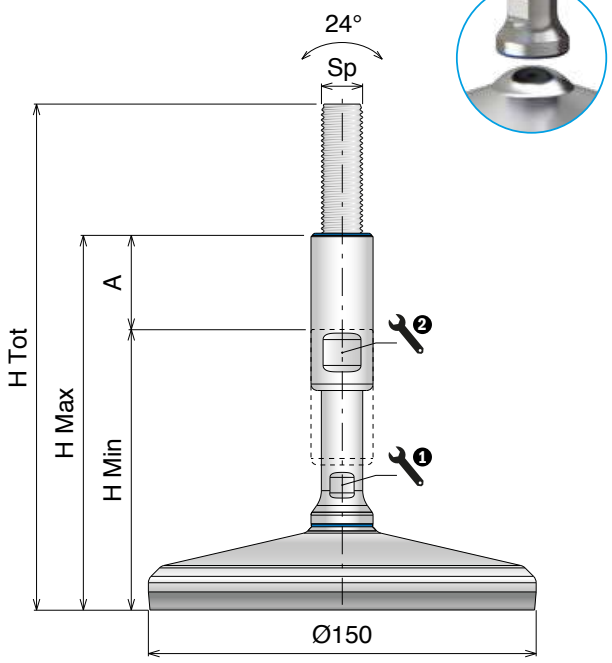

Ø150
DIAMETER (mm)

SLIT VERSION ANTI-SLIP

Art-Nr.	Sp	H Tot (mm)	H Min (mm)	H Max (mm)	A (mm)	1 (mm)	2 (mm)	Load (N)
903005	M12	195	115	160	45	10	17	12.000
903006		245	145	210	65	10	17	
903007	M16	195	115	160	45	13	19	30.000
903008		245	145	210	65	13	19	
903009	M20	195	115	160	45	17	24	45.000
903010		245	145	210	65	17	24	
903011	M24	195	115	160	45	19	30	45.000
903012		245	145	210	65	19	30	
903013	M30	195	115	160	45	24	36	45.000
903014		245	145	210	65	24	36	
903015		305	205	270	65	24	36	
903016	M36	195	115	160	45	30	42	45.000
903017		245	145	210	65	30	42	
903018		305	205	270	65	30	42	

CERTIFIED PRODUCTS
ASK FOR CERTIFICATION:
certificate@movexii.com

Oadby Core product range
Oadby Available from stock in Leicester
Easy Available from stock in Italy
Standard Produced to order in Italy

Movex®

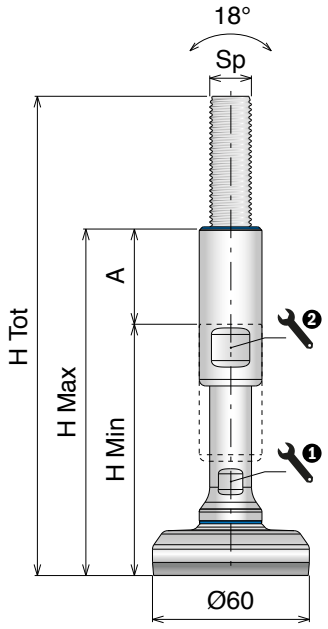

Ø60
DIAMETER (mm)

HIGH LOAD ANTI-SLIP

Art-Nr.	Sp	H Tot (mm)	H Min (mm)	H Max (mm)	A (mm)	1 (mm)	2 (mm)	Load (N)
903019	M12	182,5	102,5	147,5	45	10	17	12.000
903020		232,5	132,5	197,5	65	10	17	
903021	M16	182,5	102,5	147,5	45	13	19	30.000
903022		232,5	132,5	197,5	65	13	19	
903023	M20	182,5	102,5	147,5	45	17	24	45.000
903024		232,5	132,5	197,5	65	17	24	
903025	M24	182,5	102,5	147,5	45	19	30	60.000
903026		232,5	132,5	197,5	65	19	30	
903027	M30	182,5	102,5	147,5	45	24	36	60.000
903028		232,5	132,5	197,5	65	24	36	
903029		292,5	192,5	257,5	65	24	36	
903030	M36	182,5	102,5	147,5	45	30	42	60.000
903031		232,5	132,5	197,5	65	30	42	
903032		292,5	192,5	257,5	65	30	42	

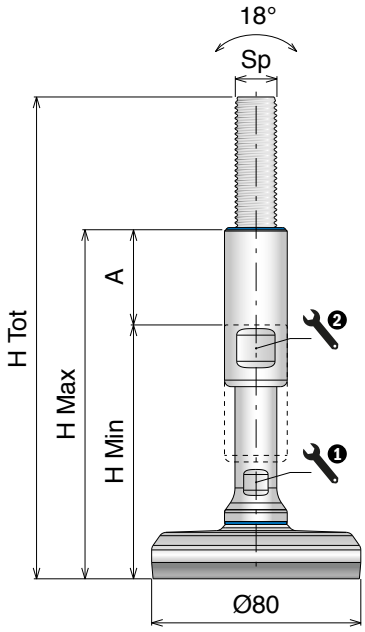

Ø80
DIAMETER (mm)

HIGH LOAD ANTI-SLIP

Art-Nr.	Sp	H Tot (mm)	H Min (mm)	H Max (mm)	A (mm)	1 (mm)	2 (mm)	Load (N)
903033	M12	183,5	103,5	148,5	45	10	17	12.000
903034		233,5	133,5	198,5	65	10	17	
903035	M16	183,5	103,5	148,5	45	13	19	30.000
903036		233,5	133,5	198,5	65	13	19	
903037	M20	183,5	103,5	148,5	45	17	24	45.000
903038		233,5	133,5	198,5	65	17	24	
903039	M24	183,5	103,5	148,5	45	19	30	70.000
903040		233,5	133,5	198,5	65	19	30	
903041	M30	183,5	103,5	148,5	45	24	36	80.000
903042		233,5	133,5	198,5	65	24	36	
903043		293,5	193,5	258,5	65	24	36	
903044	M36	183,5	103,5	148,5	45	30	42	80.000
903045		233,5	133,5	198,5	65	30	42	
903046		293,5	193,5	258,5	65	30	42	

CERTIFIED PRODUCTS
ASK FOR CERTIFICATION:
certificate@movexii.com

C500 HEAVY

Piedi di livellamento / *Leveling feet* / *Nivellierfüße*

On request vulcanized rubber can be provided white or blue and spindle can be made in AISI 316.

Materiale / *Material* / *Materialien:*
Base, stelo, rondella e boccola: Acciaio inox
Base plate, spindle, washer and cover: Stainless steel
Fussplatte, Spindel, Scheibe und Hülse: Edelstahl

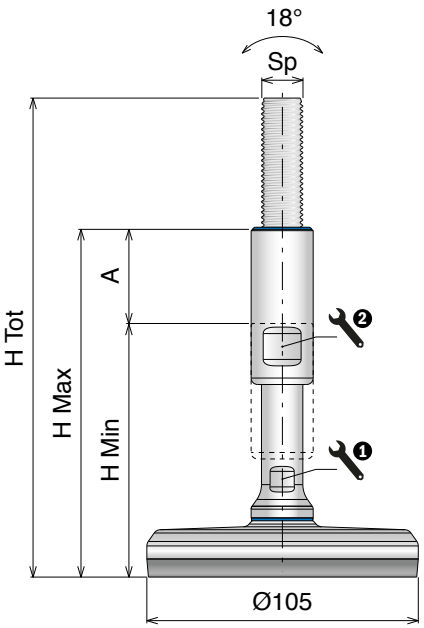

Ø105

DIAMETER (mm)

HIGH LOAD ANTI-SLIP

Art-Nr.	Sp	H Tot (mm)	H Min (mm)	H Max (mm)	A (mm)	1 (mm)	2 (mm)	Load (N)
903047	M12	184,5	104,5	149,5	45	10	17	12.000
903048		234,5	134,5	199,5	65	10	17	
903049	M16	184,5	104,5	149,5	45	13	19	30.000
903050		234,5	134,5	199,5	65	13	19	
903051	M20	184,5	104,5	149,5	45	17	24	45.000
903052		234,5	134,5	199,5	65	17	24	
903053	M24	184,5	104,5	149,5	45	19	30	70.000
903054		234,5	134,5	199,5	65	19	30	
903055	M30	184,5	104,5	149,5	45	24	36	100.000
903056		234,5	134,5	199,5	65	24	36	
903057		294,5	194,5	259,5	65	24	36	
903058	M36	184,5	104,5	149,5	45	30	42	120.000
903059		234,5	134,5	199,5	65	30	42	
903060		294,5	194,5	259,5	65	30	42	

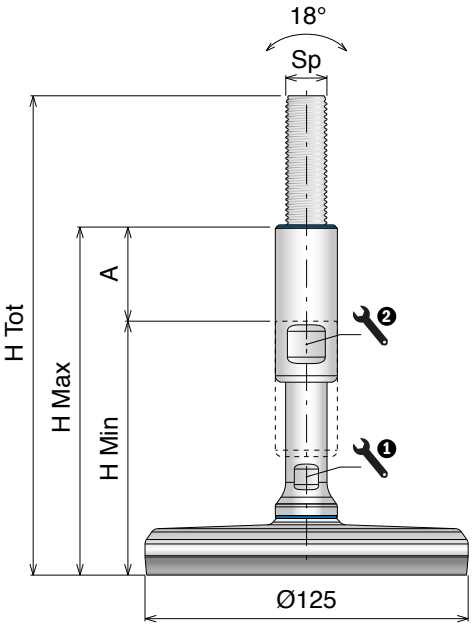

Ø125

DIAMETER (mm)

HIGH LOAD ANTI-SLIP

Art-Nr.	Sp	H Tot (mm)	H Min (mm)	H Max (mm)	A (mm)	1 (mm)	2 (mm)	Load (N)
903061	M12	184,5	104,5	149,5	45	10	17	12.000
903062		234,5	134,5	199,5	65	10	17	
903063	M16	184,5	104,5	149,5	45	13	19	30.000
903064		234,5	134,5	199,5	65	13	19	
903065	M20	184,5	104,5	149,5	45	17	24	45.000
903066		234,5	134,5	199,5	65	17	24	
903067	M24	184,5	104,5	149,5	45	19	30	70.000
903068		234,5	134,5	199,5	65	19	30	
903069	M30	184,5	104,5	149,5	45	24	36	100.000
903070		234,5	134,5	199,5	65	24	36	
903071		294,5	194,5	259,5	65	24	36	
903072	M36	184,5	104,5	149,5	45	30	42	130.000
903073		234,5	134,5	199,5	65	30	42	
903074		294,5	194,5	259,5	65	30	42	

CERTIFIED PRODUCTS
ASK FOR CERTIFICATION:
certificate@movexii.com

Oadby Core product range
Oadby Available from stock in Leicester
Easy Available from stock in Italy
Standard Produced to order in Italy

Movex

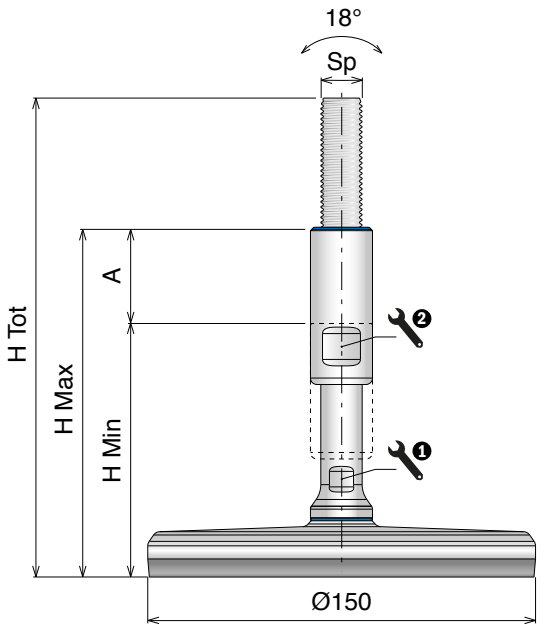

Ø150
DIAMETER (mm) — HIGH LOAD — ANTI-SLIP

Art-Nr.	Sp	H Tot (mm)	H Min (mm)	H Max (mm)	A (mm)	1 (mm)	2 (mm)	Load (N)
903075	M12	184,5	104,5	149,5	45	10	17	12.000
903076		234,5	134,5	199,5	65	10	17	
903077	M16	184,5	104,5	149,5	45	13	19	30.000
903078		234,5	134,5	199,5	65	13	19	
903079	M20	184,5	104,5	149,5	45	17	24	45.000
903080		234,5	134,5	199,5	65	17	24	
903081	M24	184,5	104,5	149,5	45	19	30	70.000
903082		234,5	134,5	199,5	65	19	30	
903083	M30	184,5	104,5	149,5	45	24	36	100.000
903084		234,5	134,5	199,5	65	24	36	
903085		294,5	194,5	259,5	65	24	36	
903086	M36	184,5	104,5	149,5	45	30	42	150.000
903087		234,5	134,5	199,5	65	30	42	
903088		294,5	194,5	259,5	65	30	42	

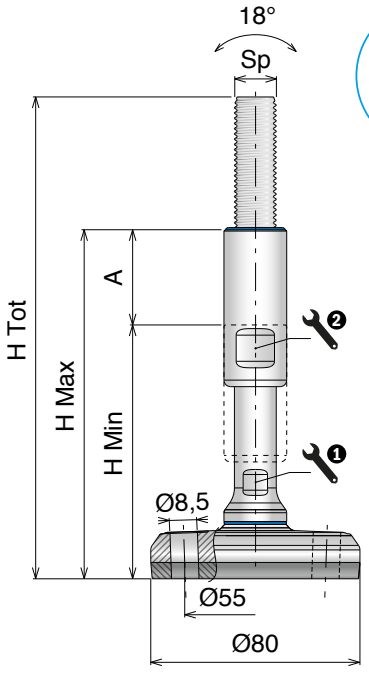

Nut M8
Hygienic & certified
903236

Ø80
DIAMETER (mm) — HIGH LOAD — FIXING POINT x2 — ANTI-SLIP

Art-Nr.	Sp	H Tot (mm)	H Min (mm)	H Max (mm)	A (mm)	1 (mm)	2 (mm)	Load (N)
903103	M12	183,5	103,5	148,5	45	10	17	12.000
903104		233,5	133,5	198,5	65	10	17	
903105	M16	183,5	103,5	148,5	45	13	19	30.000
903106		233,5	133,5	198,5	65	13	19	
903107	M20	183,5	103,5	148,5	45	17	24	45.000
903108		233,5	133,5	198,5	65	17	24	
903109	M24	183,5	103,5	148,5	45	19	30	70.000
903110		233,5	133,5	198,5	65	19	30	
903111	M30	183,5	103,5	148,5	45	24	36	80.000
903112		233,5	133,5	198,5	65	24	36	
903113		293,5	193,5	258,5	65	24	36	
903114	M36	183,5	103,5	148,5	45	30	42	80.000
903115		233,5	133,5	198,5	65	30	42	
903116		293,5	193,5	258,5	65	30	42	

CERTIFIED PRODUCTS
ASK FOR CERTIFICATION:
certificate@movexii.com

C500 HEAVY

Piedi di livellamento / *Leveling feet* / *Nivellierfüße*

On request vulcanized rubber can be provided white or blue and spindle can be made in AISI 316.

Materiale / *Material* / *Materialien:*
Base, stelo, rondella e boccola: Acciaio inox
Base plate, spindle, washer and cover: Stainless steel
Fussplatte, Spindel, Scheibe und Hülse: Edelstahl

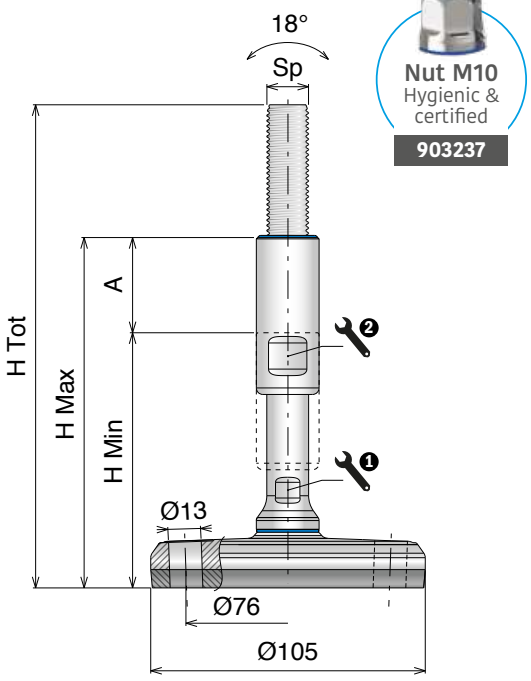

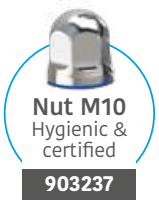

Ø105

DIAMETER (mm) — HIGH LOAD — FIXING POINT — ANTI-SLIP

Art-Nr.	Sp	H Tot (mm)	H Min (mm)	H Max (mm)	A (mm)	❶ (mm)	❷ (mm)	Load (N)
903117	M12	184,5	104,5	149,5	45	10	17	12.000
903118		234,5	134,5	199,5	65	10	17	
903119	M16	184,5	104,5	149,5	45	13	19	30.000
903120		234,5	134,5	199,5	65	13	19	
903121	M20	184,5	104,5	149,5	45	17	24	45.000
903122		234,5	134,5	199,5	65	17	24	
903123	M24	184,5	104,5	149,5	45	19	30	70.000
903124		234,5	134,5	199,5	65	19	30	
903125	M30	184,5	104,5	149,5	45	24	36	100.000
903126		234,5	134,5	199,5	65	24	36	
903127		294,5	194,5	259,5	65	24	36	
903128	M36	184,5	104,5	149,5	45	30	42	120.000
903129		234,5	134,5	199,5	65	30	42	
903130		294,5	194,5	259,5	65	30	42	

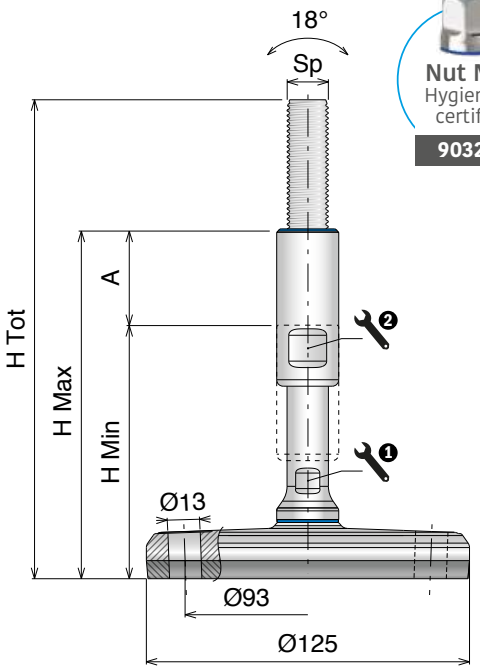

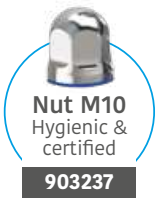

Ø125

DIAMETER (mm) — HIGH LOAD — FIXING POINT — ANTI-SLIP

Art-Nr.	Sp	H Tot (mm)	H Min (mm)	H Max (mm)	A (mm)	❶ (mm)	❷ (mm)	Load (N)
903131	M12	184,5	104,5	149,5	45	10	17	12.000
903132		234,5	134,5	199,5	65	10	17	
903133	M16	184,5	104,5	149,5	45	13	19	30.000
903134		234,5	134,5	199,5	65	13	19	
903135	M20	184,5	104,5	149,5	45	17	24	45.000
903136		234,5	134,5	199,5	65	17	24	
903137	M24	184,5	104,5	149,5	45	19	30	70.000
903138		234,5	134,5	199,5	65	19	30	
903139	M30	184,5	104,5	149,5	45	24	36	100.000
903140		234,5	134,5	199,5	65	24	36	
903141		294,5	194,5	259,5	65	24	36	
903142	M36	184,5	104,5	149,5	45	30	42	130.000
903143		234,5	134,5	199,5	65	30	42	
903144		294,5	194,5	259,5	65	30	42	

CERTIFIED PRODUCTS
ASK FOR CERTIFICATION:
certificate@movexii.com

Oadby Core product range
Oadby Available from stock in Leicester
Easy Available from stock in Italy
Standard Produced to order in Italy

Movex

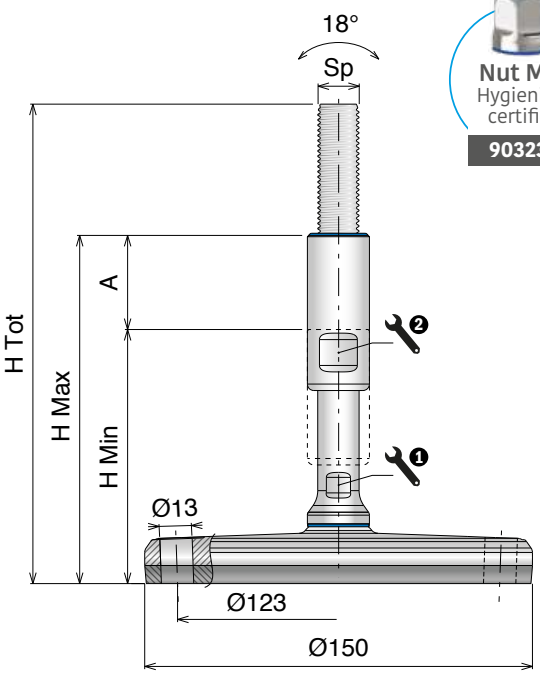

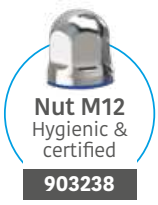

Ø150 DIAMETER (mm) | Kg HIGH LOAD | x2 FIXING POINT | ANTI-SLIP

Art-Nr.	Sp	H Tot (mm)	H Min (mm)	H Max (mm)	A (mm)	❶ (mm)	❷ (mm)	Load (N)
903145	M12	184,5	104,5	149,5	45	10	17	12.000
903146		234,5	134,5	199,5	65	10	17	
903147	M16	184,5	104,5	149,5	45	13	19	30.000
903148		234,5	134,5	199,5	65	13	19	
903149	M20	184,5	104,5	149,5	45	17	24	45.000
903150		234,5	134,5	199,5	65	17	24	
903151	M24	184,5	104,5	149,5	45	19	30	70.000
903152		234,5	134,5	199,5	65	19	30	
903153	M30	184,5	104,5	149,5	45	24	36	100.000
903154		234,5	134,5	199,5	65	24	36	
903155		294,5	194,5	259,5	65	24	36	
903156	M36	184,5	104,5	149,5	45	30	42	150.000
903157		234,5	134,5	199,5	65	30	42	
903158		294,5	194,5	259,5	65	30	42	

CERTIFIED PRODUCTS
ASK FOR CERTIFICATION:
certificate@movexii.com

C500 HEAVY-SPLIT

Piedi di livellamento / *Leveling feet* / *Nivellierfüße*

On request vulcanized rubber can be provided white or blue and spindle can be made in AISI 316.

Materiale / *Material* / *Materialien:*
Base, stelo e boccola: Acciaio inox
Base plate, spindle and cover: Stainless steel
Fussplatte, Spindel und Hülse: Edelstahl

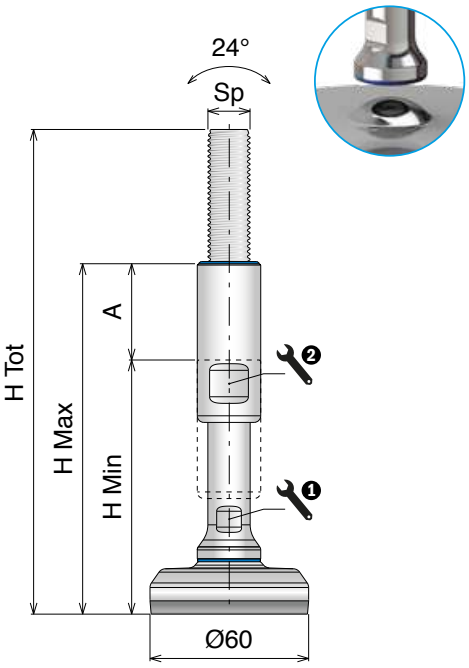

Ø 60

DIAMETER (mm)

HIGH LOAD | SLIT VERSION | ANTI-SLIP

Art-Nr.	Sp	H Tot (mm)	H Min (mm)	H Max (mm)	A (mm)	1 (mm)	2 (mm)	Load (N)
903159	M12	182,5	102,5	147,5	45	10	17	12.000
903160		232,5	132,5	197,5	65	10	17	
903161	M16	182,5	102,5	147,5	45	13	19	30.000
903162		232,5	132,5	197,5	65	13	19	
903163	M20	182,5	102,5	147,5	45	17	24	45.000
903164		232,5	132,5	197,5	65	17	24	
903165	M24	182,5	102,5	147,5	45	19	30	60.000
903166		232,5	132,5	197,5	65	19	30	
903167	M30	182,5	102,5	147,5	45	24	36	60.000
903168		232,5	132,5	197,5	65	24	36	
903169		292,5	192,5	257,5	65	24	36	
903170	M36	182,5	102,5	147,5	45	30	42	60.000
903171		232,5	132,5	197,5	65	30	42	
903172		292,5	192,5	257,5	65	30	42	

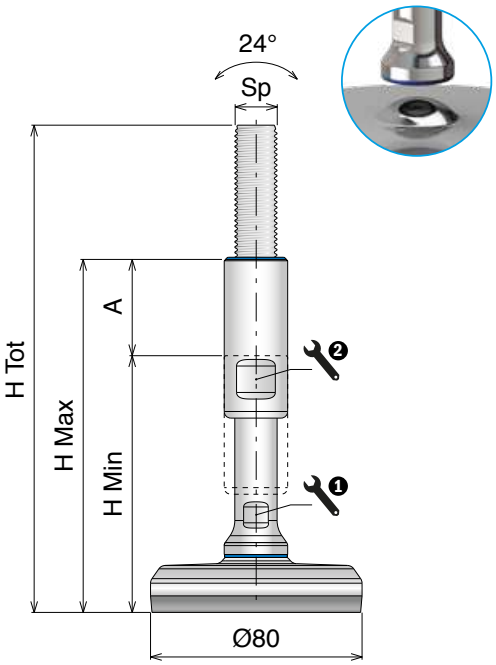

Ø 80

DIAMETER (mm)

HIGH LOAD | SLIT VERSION | ANTI-SLIP

Art-Nr.	Sp	H Tot (mm)	H Min (mm)	H Max (mm)	A (mm)	1 (mm)	2 (mm)	Load (N)
903173	M12	183,5	103,5	148,5	45	10	17	12.000
903174		233,5	133,5	198,5	65	10	17	
903175	M16	183,5	103,5	148,5	45	13	19	30.000
903176		233,5	133,5	198,5	65	13	19	
903177	M20	183,5	103,5	148,5	45	17	24	45.000
903178		233,5	133,5	198,5	65	17	24	
903179	M24	183,5	103,5	148,5	45	19	30	70.000
903180		233,5	133,5	198,5	65	19	30	
903181	M30	183,5	103,5	148,5	45	24	36	80.000
903182		233,5	133,5	198,5	65	24	36	
903183		293,5	193,5	258,5	65	24	36	
903184	M36	183,5	103,5	148,5	45	30	42	80.000
903185		233,5	133,5	198,5	65	30	42	
903186		293,5	193,5	258,5	65	30	42	

CERTIFIED PRODUCTS
ASK FOR CERTIFICATION:
certificate@movexii.com

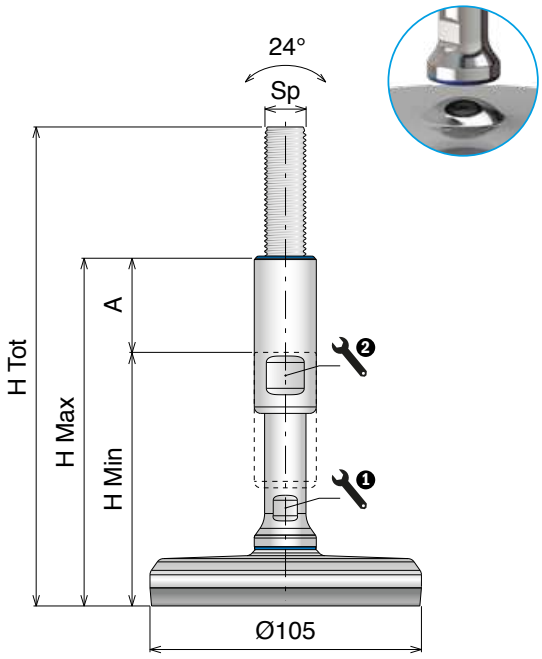

Ø105
DIAMETER (mm)

HIGH LOAD | SLIT VERSION | ANTI-SLIP

Art-Nr.	Sp	H Tot (mm)	H Min (mm)	H Max (mm)	A (mm)	① (mm)	② (mm)	Load (N)
903187	M12	184,5	104,5	149,5	45	10	17	12.000
903188		234,5	134,5	199,5	65	10	17	
903189	M16	184,5	104,5	149,5	45	13	19	30.000
903190		234,5	134,5	199,5	65	13	19	
903191	M20	184,5	104,5	149,5	45	17	24	45.000
903192		234,5	134,5	199,5	65	17	24	
903193	M24	184,5	104,5	149,5	45	19	30	70.000
903194		234,5	134,5	199,5	65	19	30	
903195	M30	184,5	104,5	149,5	45	24	36	100.000
903196		234,5	134,5	199,5	65	24	36	
903197		294,5	194,5	259,5	65	24	36	
903198	M36	184,5	104,5	149,5	45	30	42	120.000
903199		234,5	134,5	199,5	65	30	42	
903200		294,5	194,5	259,5	65	30	42	

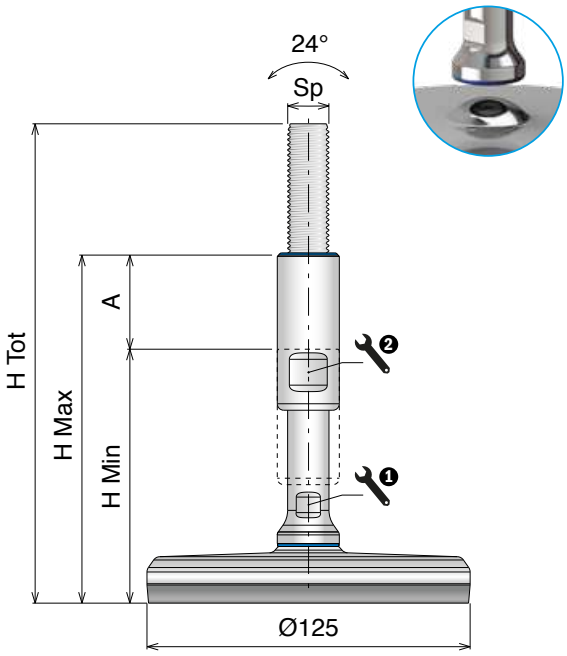

Ø125
DIAMETER (mm)

HIGH LOAD | SLIT VERSION | ANTI-SLIP

Art-Nr.	Sp	H Tot (mm)	H Min (mm)	H Max (mm)	A (mm)	① (mm)	② (mm)	Load (N)
903201	M12	184,5	104,5	149,5	45	10	17	12.000
903202		234,5	134,5	199,5	65	10	17	
903203	M16	184,5	104,5	149,5	45	13	19	30.000
903204		234,5	134,5	199,5	65	13	19	
903205	M20	184,5	104,5	149,5	45	17	24	45.000
903206		234,5	134,5	199,5	65	17	24	
903207	M24	184,5	104,5	149,5	45	19	30	70.000
903208		234,5	134,5	199,5	65	19	30	
903209	M30	184,5	104,5	149,5	45	24	36	100.000
903210		234,5	134,5	199,5	65	24	36	
903211		294,5	194,5	259,5	65	24	36	
903212	M36	184,5	104,5	149,5	45	30	42	130.000
903213		234,5	134,5	199,5	65	30	42	
903214		294,5	194,5	259,5	65	30	42	

CERTIFIED PRODUCTS
ASK FOR CERTIFICATION:
certificate@movexii.com

C500 HEAVY-SPLIT

Piedi di livellamento / *Leveling feet* / *Nivellierfüße*

On request vulcanized rubber can be provided white or blue and spindle can be made in AISI 316.

Materiale / *Material* / *Materialien:*
Base, stelo e boccola: Acciaio inox
Base plate, spindle and cover: Stainless steel
Fussplatte, Spindel und Hülse: Edelstahl

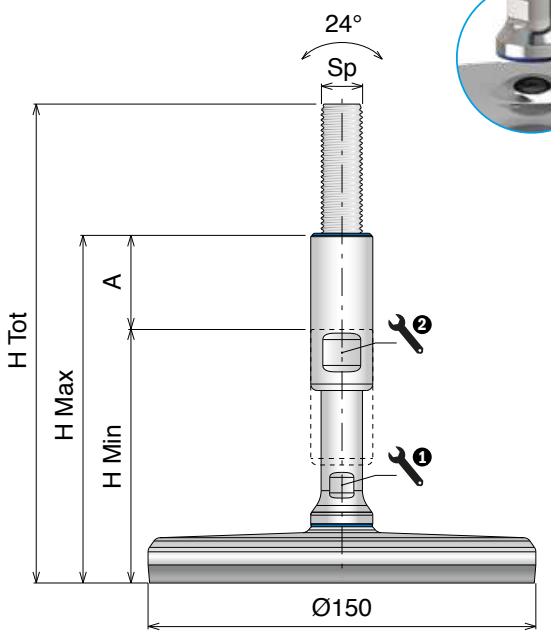

Ø150
DIAMETER (mm)

HIGH LOAD | SLIT VERSION | ANTI-SLIP

Art-Nr.	Sp	H Tot (mm)	H Min (mm)	H Max (mm)	A (mm)	1 (mm)	2 (mm)	Load (N)
903215	M12	184,5	104,5	149,5	45	10	17	12.000
903216		234,5	134,5	199,5	65	10	17	
903217	M16	184,5	104,5	149,5	45	13	19	30.000
903218		234,5	134,5	199,5	65	13	19	
903219	M20	184,5	104,5	149,5	45	17	24	45.000
903220		234,5	134,5	199,5	65	17	24	
903221	M24	184,5	104,5	149,5	45	19	30	70.000
903222		234,5	134,5	199,5	65	19	30	
903223	M30	184,5	104,5	149,5	45	24	36	100.000
903224		234,5	134,5	199,5	65	24	36	
903225		294,5	194,5	259,5	65	24	36	
903226	M36	184,5	104,5	149,5	45	30	42	150.000
903227		234,5	134,5	199,5	65	30	42	
903228		294,5	194,5	259,5	65	30	42	

CERTIFIED PRODUCTS
ASK FOR CERTIFICATION:
certificate@movexii.com

Oadby Core product range
Oadby Available from stock in Leicester
Easy Available from stock in Italy
Standard Produced to order in Italy

Movex®

NEW

903

Boccola superiore cerficata ed igienica
Certified hygienic top cover / Zertifiziert hygienische Abdeckülse

Delivery: Easy Standard

Main features:
- Stainless steel AISI 304
- Blue seal for hermetic closure
- Perfect to protect the threaded spindle

Art-Nr.	Sp	D	TH	L	
903229	M12	Ø20	110	100	17
903230	M16	Ø24	110	100	19
903231	M20	Ø30	110	100	24
903232	M24	Ø34	110	100	30
903233	M30	Ø40	110	100	36
903234	M36	Ø46	110	100	42

CERTIFIED PRODUCTS
ASK FOR CERTIFICATION:
certificate@movexii.com

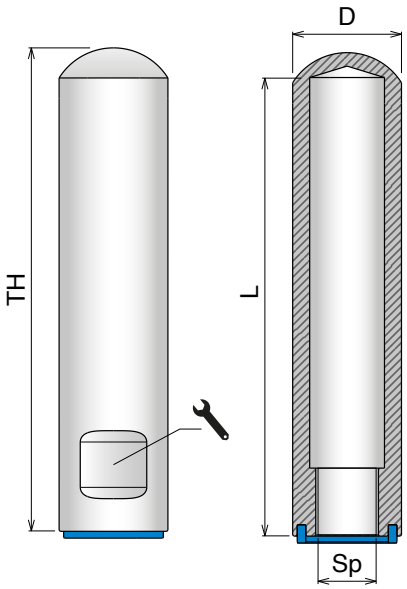

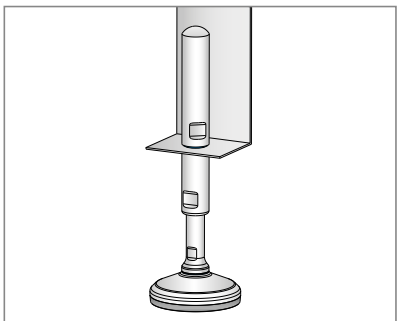

Example of application

NEW

903

Vite igienica cerficata ed igienica
Certified hygienic screw / Zertifiziert hygienische Schraube

Delivery: Easy Standard

Main features:
- Stainless steel AISI 304
- Blue seal for hermetic closure

Art-Nr.	Sp	D	TH	L		Box
903255	M8	16	58	45	13	10 pcs
903253	M10	20	60	45	16	10 pcs
903251	M12	24,5	78	60	18	10 pcs

CERTIFIED PRODUCTS
ASK FOR CERTIFICATION:
certificate@movexii.com

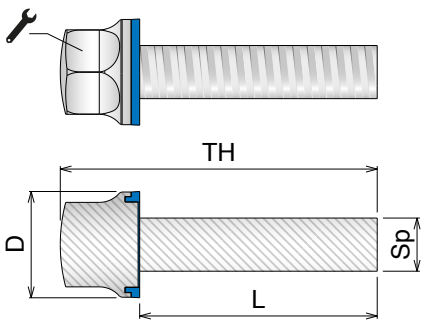

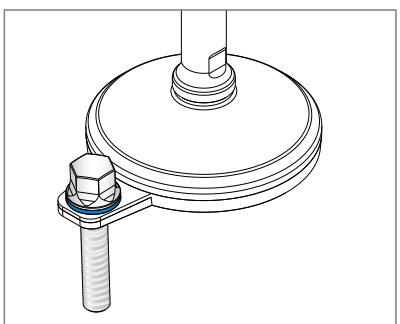

Example of application

Materiale / *Material / Materialien:*
SS: Acciaio inox / *Stainless steel / Edelstahl*
FeZn: Ferro zincato / *Zinc plated steel / Stahl Verzinkt*

NEW

903 Dado cerficato ed igienico
Certified hygienic nut / Zertifiziert hygienische Hutmutter

Delivery: Easy Standard

Main features:
- Stainless steel AISI 304
- Blue seal for hermetic closure

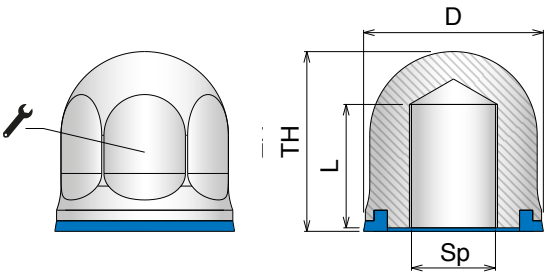

Art-Nr.	Sp	D	TH	L		Box
903235	M6	13	14	10	10	10 pcs
903236	M8	16	17	12	13	10 pcs
903237	M10	20	20,5	15	16	10 pcs
903238	M12	24,5	25	18	18	10 pcs
903239	M16	32	32	23	24	10 pcs
903240	M20	39	38	27	30	10 pcs

CERTIFIED PRODUCTS
ASK FOR CERTIFICATION:
certificate@movexii.com

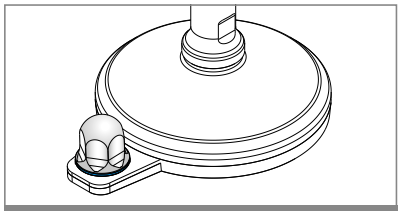

Example of application

998 Dado
Nut / Sechskantmutter

Delivery: Easy Standard

Main features:
- Stainless steel (SS) or Zinc plated steel (FeZn)
- UNI 5588 - ISO 4032 - DIN 934

Art-Nr. SS	Art-Nr. FeZn	Sp	Box
99801	99801Z	M10	50 pcs
99802	99802Z	M12	50 pcs
99804	99804Z	M16	10 pcs
99805	99805Z	M20	10 pcs
99806	99806Z	M24	5 pcs
99807	99807Z	M30	5 pcs
99808	99808Z	M36	5 pcs

996 Gomma anti-scivolo
Anti-slip pad / Gummiplatte

Delivery: Easy Standard

Main features:
- High quality vulcanized anti-slip NBR rubber
- Suitable for leveling feet Basic, Articulated, Muscle and P400R series

Art-Nr.	For base
99601	Ø40
99602	Ø50
99603	Ø60
99604	Ø80
99605	Ø100
99607	Ø110
99606	Ø120
99608	Ø123

CORRELATED PRODUCTS

Support base

Page 514/515

Threaded bushings
POLYAMIDE

Page 524/525

Threaded bushings
AISI 304

Page 526

Oadby Core product range
Oadby Available from stock in Leicester
Easy Available from stock in Italy
Standard Produced to order in Italy

Movex

645

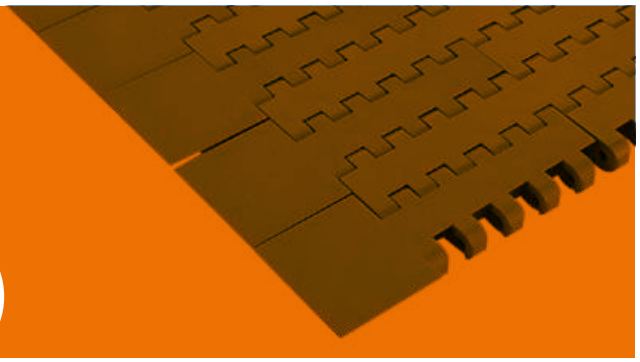

Materials chemical resistance

Materials resistance — Pag 646->648
General — Pag 649
PH-Range — Pag 649
Rubber materials — Pag 649/650
Pin materials — Pag 650

Materials for plastic chains and modular belts

POM

Low friction Acetal

- LF
- LFA
- LFB
- LFD
- LFG
- LFN
- LFW

Pag 651

Lubricated Acetal

- MPX Pag 652
- MP Pag 653

Antistatic Acetal

- AS Pag 655

Reinforced Acetal

- DKM Pag 654

PBT

Performance Polybutylene terephthalate

- MX Pag 656

Extra-Performance Polybutylene terephthalate

- PFX Pag 657

PP

Polypropylene

- PP
- PPB
- PPW

Pag 658

Reinforced Polypropylene

- PPX Pag 659

PA

Polyamide composite

- MWX Pag 660

Polyamide composite

- PA Pag 661

Materials for stainless steel chains

Stainless steel

- SS Pag 662
- SSE Pag 663
- SSM Pag 664
- SSA Pag 665

Materials for sprockets

Polyamide

- PA Pag 666

Reinforced Polyamide

- RPA Pag 666

LEGEND: ● Resistant | ● Conditionally Resistant | ● Not Resistant

Material chemical resistance

Substances	PBT	POM	PP	PE	PA
at norm climate conditions DIN50014, 23°C/50% r.a.h.	Chains & Belts	Chains & Belts	Chains & Belts	Curves Chain guides Components	Sporckets Components Chains & Belts
A Acetamide 50%		●		●	●
Acetic acid, aqueous solution 10%	●	●	●	●	●
Acetic acid, aqueous solution 5%	●	●	●	●	●
Acetic acid, concentrated	●	●	●	●	●
Acetone	●	●	●	●	●
Ammonia, aqueous solution 10%	●	●	●	●	●
Anone			●	●	●
B Benzene	●	●	●	●	●
Benzine	●	●	●	●	●
Bitumen		●	●	●	●
Boric acid, aqueous solution 10%	●	●	●	●	●
Butyl acetate	●	●	●	●	●
C Calcium chloride, aqueous solution 10%	●	●	●	●	●
Carbon tetrachloride	●	●	●	●	●
Chlorbenzene	●	●	●	●	●
Chloroform	●	●	●	●	●
Citric acid, aqueous solution 10%	●	●	●	●	●
Cupric (II) sulphate, 10%		●	●	●	●
Cyclohexane	●	●	●	●	●
Cyclohexanone	●	●	●	●	●
D Diesel oil	●	●	●	●	●
Dimethyl formamide	●	●	●	●	●
Diocthyl phthalate	●	●	●	●	●
Dioxane	●	●	●	●	●
E Edible fats, edible oils	●	●	●	●	●
Ethanol 96%	●	●	●	●	●
Ethyl ether	●	●	●	●	●
Ethylacetate	●	●	●	●	●
Ethylene chloride	●	●	●	●	●
F Formaldehyde, aqueous solution 30%		●	●	●	●
Formamide	●	●		●	●
Formic acid, aqueous solution 10%	●	●	●	●	●
Freon, frigen, liquid	●		●	●	●
Fruit juices	●	●	●	●	●

Continue >>

LEGEND: ● Resistant | ● Conditionally Resistant | ● Not Resistant

Substances	PBT	POM	PP	PE	PA
at norm climate conditions DIN50014, 23°C/50% r.a.h.	Chains & Belts	Chains & Belts	Chains & Belts	Curves Chain guides Components	Sporckets Components Chains & Belts
Fuel oil	●	●	●	●	●
G Glycerine	●	●	●	●	●
Glycol	●	●	●	●	●
Glysantine, aqueous solution 40%	●	●	●	●	●
H Heptane, hexane	●	●	●	●	●
Hydrochloric acid, aqueous solution 2%	●	●	●	●	●
Hydrochloric acid, aqueous solution 36%	●	●	●	●	●
Hydrofluoric acid, 40%	●	●	●	●	●
Hydrogen peroxide, aqueous solution 0.5%	●	●	●	●	●
Hydrogen peroxide, aqueous solution 30%	●	●	●	●	●
Hydrogen sulphide	●	●	●	●	●
Hydrogen sulphide, aqueous solution	●	●	●	●	●
I Iodine solution, alcohol solution			●	●	●
Iso-octane			●	●	●
Isopropanol	●	●	●	●	●
L Lactic acid, aqueous solution 10%	●	●	●	●	●
Lactic acid, aqueous solution 90%		●	●	●	●
Linseed oil	●	●	●	●	●
M Methanol	●	●	●	●	●
Methyl ethyl ketone	●	●	●	●	●
Methylene chloride	●	●	●	●	●
Milk	●	●	●	●	●
N Nitric acid, aqueous solution 2%	●	●	●	●	●
Nitrobenzene	●	●	●	●	●
O Oxalic acid, aqueous solution 10%	●	●	●	●	●
Ozone	●	●		●	●
P Paraffin oil	●	●	●	●	●
Perchlorethylene	●	●	●	●	●
Petroleum	●	●	●	●	●
Phenol, aqueous solution	●	●	●	●	●
Phosphoric acid, aqueous solution 10%	●	●	●	●	●
Phosphoric acid, concentrated	●		●	●	●
Potassium dichromate, aqueous solution 10%	●	●	●	●	●
Potassium lye, aqueous solution 10%	●	●	●	●	●
Potassium lye, aqueous solution 50%	●	●	●	●	●

Continue >>

Material chemical resistance

Resistenza chimica dei materiali / *Materials chemical resistance* / *Chemische Beständigkeit der Materialien*

LEGEND: ● Resistant | ● Conditionally Resistant | ● Not Resistant

Substances	PBT	POM	PP	PE	PA
at norm climate conditions DIN50014, 23°C/50% r.a.h.	Chains & Belts	Chains & Belts	Chains & Belts	Curves Chain guides Components	Sporckets Components Chains & Belts
Potassium permanganate, aqueous solution 1%	●	●	●	●	●
Propanol	●	●	●	●	●
Pyridine		●	●	●	●
S Salicylc acid	●			●	●
Silicon oils	●	●	●	●	●
Soap solution, aqueous solution	●	●	●	●	●
Soda lye, aqueous solution 5%	●	●	●	●	●
Soda lye, aqueous solution 50%	●	●	●	●	●
Soda solution, aqueous solution 10%	●		●	●	●
Sodium bisulphite, aqueous solution 10%	●	●	●	●	●
Sodium carbonate, aqueous solution 10%	●	●	●	●	●
Sodium chloride, aqueous solution 10%	●	●	●	●	●
Sodium nitrate, aqueous solution 10%	●	●	●	●	●
Sodium thiosulphate, aqueous solution 10%	●	●	●	●	●
Styrene	●	●	●	●	●
Sulphuric acid, aqueous solution 2%	●	●	●	●	●
Sulphuric acid, concentrated 98%	●	●	●	●	●
T Tar	●	●	●		●
Tartaric acid	●	●	●	●	●
Tetrahydrofurane	●	●	●	●	●
Tetralin	●	●		●	●
Toluene	●	●	●	●	●
Transformer oil	●	●	●	●	●
Trichlorethylene	●	●	●	●	●
Triethanolamine	●	●	●	●	●
U Urea, aqueous solution	●	●	●	●	●
V Vaseline	●	●	●	●	●
W Water, cold	●	●	●	●	●
Water, warm	●	●	●	●	●
Wax, molten	●	●	●	●	●
Wine, brandy	●	●	●	●	●
X Xylene	●	●	●	●	●
Z Zinc chloride, aqueous solution 10%	●	●	●	●	●

General

LEGEND: ● Resistant | ● Conditionally Resistant | ● Not Resistant

Test condition	PBT	POM	PP	PE	PA
at norm climate conditions DIN50014, 23°C/50% r.a.h.	Chains & Belts	Chains & Belts	Chains & Belts	Curves Chain guides Components	Sporckets Components Chains & Belts
Acids, weak	●	●	●	●	●
Acids, strong	●	●	●	●	●
Alkalines, weak	●	●	●	●	●
Alkalines, strong	●	●	●	●	●
Solvents, alcohol	●	●	●	●	●
Solvents, ester	●	●	●	●	●
Solvents, ether	●	●	●	●	●
Solvents, Ketone	●	●	●	●	●
Water, cold	●	●	●	●	●
Water, hot	●	●	●	●	●

PH-Range

General pH-limits at 23°C	PBT	POM	PP	PE	PA
Lower limit	2	4	1	1	4
Upper limit	9	13	13,5	13,5	12

Rubber materials

LEGEND: ● Very good | ● Good | ● Worse

Test condition	NBR	EPDM-PP	TPR	TPE
at 23°C	GT stainless steel chains	Gripper chains	Gripper chains	GT plastic chains & belts
Mechanical resistance				
Wear resistance	●	●	●	●
Tear resistance	●	●	●	●
Chemical resistance				
Against acids	●	●	●	●
Against alkalines	●	●	●	●
Against oils	●	●	●	●
Against solvents	●	●	●	●
Application temperatures				
°C -	-30	-40	-50	-50
°C +	100	130	120	120

Rubber materials

LEGEND: ● Very good | ● Good | ● Satisfactory

Test condition	UHMWPE	BluLub	C
at 23°C	Extremely high mol. weight	UHMWPE w/built in lubrication	UHMWPE w/ceramic additives
Mechanical resistance			
Wear resistance against steel chains	●	●	●
Wear resistance against plastic chains	●	●	
Chemical resistance			
Against acids	●	●	●
Against alkalines	●	●	●
Against oils	●	●	●
Against solvents	●	●	●
Application temperatures			
°C -	-40	-40	-40
°C + (shortly)	80 (100)	50 (80)	80 (100)

Pin materials

General pH-limits at 23°C	PBT	POM	PP	PE	PA
Lower limit	2	4	1	1	4
Upper limit	9	13	13,5	13,5	12

Stainless steel	Pin	Remarks
SSM	DIN-EN 1.4057 / AISI 431	Hardened
SSE	DIN-EN 1.4057 / AISI 431	Hardened
SS	DIN-EN 1.4057 / AISI 431	
SSA	DIN-EN 1.4301 / AISI 304	

Plastic chains	Pin	Remarks
All materials	Ferritic Stainless steel (Suitable for magnetic system DIN-EN 1.4016 - AISI 430)	820, 880 TAB (also available with plastic pin POM reinforced)

Plastic belts	Pin	Remarks
LFA	PBT	White
MPX	PBT	White
DKM	PBT	White
MWX	PBT	White
MX/PFX	POM	Grey
PP	PP	Blue (500 RR: PP grey)

LF-LFA-LFB-LFD-LFG-LFN-LFW

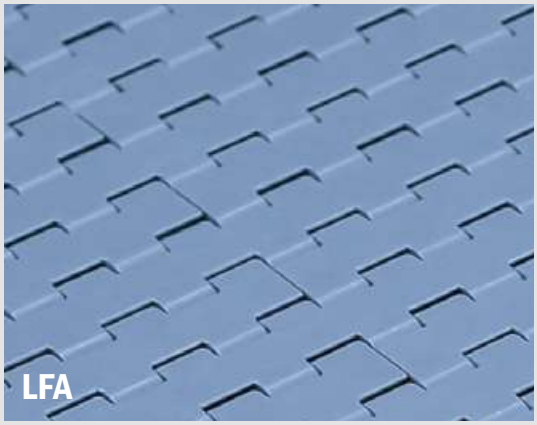

Also available:

- LFB
- LFD
- LFG
- LFN
- LFW

Description

Low friction Acetal Resin.
This material can be used in all common applications.
Primary Components: *POM*

General information

Material	Chemical abbreviation	Allowable application temperatures						FDA Approval
		Fahrenheit			Celsius			
		Min	Max		Min	Max		
			Dry	Wet		Dry	Wet	
Low friction acetal	POM	-40	176	149	-40	80	65	YES

Friction Factors Between Material and Product

Lubrication	Product Material					
	Paper & carton	Metal (steel)	Aluminium	Plastics & PET	Glass (returnable)	Glass (new)
Dry	0,28	0,25	0,25	0,21	0,24	0,20
Water	n.a.	0,20	0,18	0,16	0,18	0,15
W&s & Dry lube	n.a.	0,15	0,14	0,13	0,14	0,12
Oil	n.a.	0,10	n.a.	n.a.	n.a.	n.a.

Friction Factors Between Material and Product

Lubrication	Wearstrip Material		
	Stainless steel	UHMW-PE & PA	BluLub®
Dry	0,24	0,20	0,18
Water	0,19	0,16	0,14
W&s & Dry lube	0,15	0,10	0,10
Oil	0,10	0,10	0,10

Note

Material properties and performance of final product are subject to variation according to operating conditions, e.g. environmental conditions, chemicals, cleanliness.

MPX

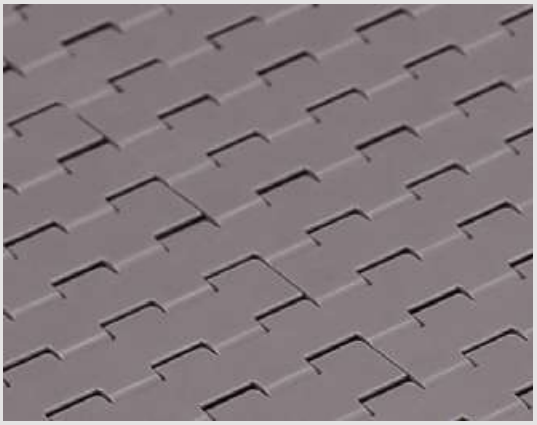

Materials

Description

High performance Material with a low coefficent of friction.

This material can increase wear life 25% over LF material.

Primary Components: *POM*

General information

Material	Chemical abbreviation	Allowable application temperatures						FDA Approval
		Fahrenheit			Celsius			
		Min	Max		Min	Max		
			Dry	Wet		Dry	Wet	
Lucricated Acetal	POM	-40	176	149	-40	80	65	YES

Friction Factors Between Material and Product

Lubrication	Product Material					
	Paper & carton	Metal (steel)	Aluminium	Plastics & PET	Glass (returnable)	Glass (new)
Dry	0,24	0,22	0,21	0,19	0,21	0,16
Water	n.a.	0,19	0,17	0,15	0,17	0,14
W&s & Dry lube	n.a.	0,15	0,14	0,13	0,13	0,12
Oil	n.a.	0,10	n.a.	n.a.	n.a.	n.a.

Friction Factors Between Material and Product

Lubrication	Wearstrip Material		
	Stainless steel	UHMW-PE & PA	BluLub®
Dry	0,23	0,19	0,17
Water	0,19	0,15	0,14
W&s & Dry lube	0,15	0,10	0,10
Oil	0,10	0,10	0,10

Note

Material properties and performance of final product are subject to variation according to operating conditions, e.g. environmental conditions, chemicals, cleanliness.

MP

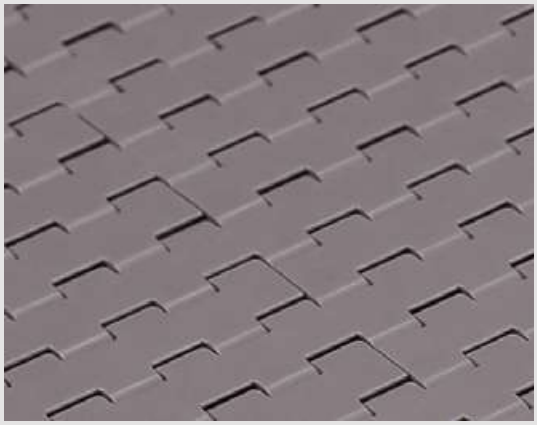

Materials

Description

High performance Material with a low coefficent of friction.

This material can increase wear life 25% over LF material.

Primary Components: *POM*

General information

Material	Chemical abbreviation	Allowable application temperatures						FDA Approval
		Fahrenheit			Celsius			
		Min	Max		Min	Max		
			Dry	Wet		Dry	Wet	
Lucricated Acetal	POM	-40	176	149	-40	80	65	YES

Friction Factors Between Material and Product

Lubrication	Product Material					
	Paper & carton	Metal (steel)	Aluminium	Plastics & PET	Glass (returnable)	Glass (new)
Dry	0,24	0,22	0,21	0,19	0,21	0,16
Water	n.a.	0,19	0,17	0,15	0,17	0,14
W&s & Dry lube	n.a.	0,15	0,14	0,13	0,13	0,12
Oil	n.a.	0,10	n.a.	n.a.	n.a.	n.a.

Friction Factors Between Material and Product

Lubrication	Wearstrip Material		
	Stainless steel	UHMW-PE & PA	BluLub®
Dry	0,23	0,19	0,17
Water	0,19	0,15	0,14
W&s & Dry lube	0,15	0,10	0,10
Oil	0,10	0,10	0,10

Note

Material properties and performance of final product are subject to variation according to operating conditions, e.g. environmental conditions, chemicals, cleanliness.

DKM

Materials

Description

Aramide reinforced acetal material

It's commonly used in dry running glass handling applications.

Primary Component: *POM*

General information

Material	Chemical abbreviation	Allowable application temperatures						FDA Approval
		Fahrenheit			Celsius			
		Min	Max		Min	Max		
			Dry	Wet		Dry	Wet	
Aramide reinforced acetal	POM	-40	176	149	-40	80	65	-

Friction Factors Between Material and Product

Lubrication	Product Material					
	Paper & carton	Metal (steel)	Aluminium	Plastics & PET	Glass (returnable)	Glass (new)
Dry	0,21	0,19	0,16	0,20	0,15	0,13
Water	n.a.	0,17	0,15	0,15	0,14	0,13
W&s & Dry lube	n.a.	0,14	0,13	0,13	0,12	0,11
Oil	n.a.	0,10	n.a.	n.a.	n.a.	n.a.

Friction Factors Between Material and Product

Lubrication	Wearstrip Material		
	Stainless steel	UHMW-PE & PA	BluLub®
Dry	0,21	0,19	0,17
Water	0,18	0,15	0,14
W&s & Dry lube	0,15	0,11	0,11
Oil	0,10	0,10	0,10

Note

Material properties and performance of final product are subject to variation according to operating conditions, e.g. environmental conditions, chemicals, cleanliness.

AS

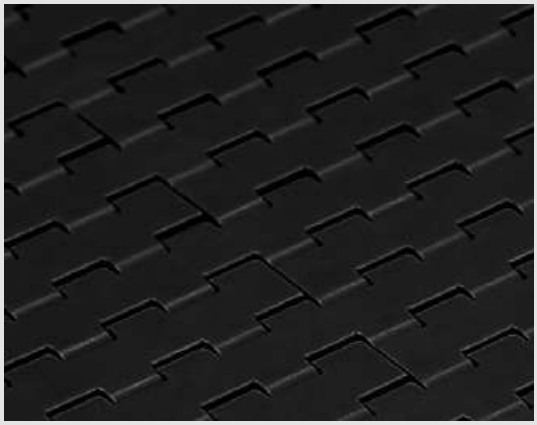

Materials

Description

AS material

eliminates the static accumulation that can happen during conveying products.

Primary Components: *POM*

General information

Material	Chemical abbreviation	Allowable application temperatures						FDA Approval
		Fahrenheit			Celsius			
		Min	Max		Min	Max		
			Dry	Wet		Dry	Wet	
Antistatic Acetal	POM	-4	180	N.R.	-18	82	N.R.	YES

Friction Factors Between Material and Product

Lubrication	Product Material					
	Paper & carton	Metal (steel)	Aluminium	Plastics & PET	Glass (returnable)	Glass (new)
Dry	0,35	0,28	0,29	0,25	0,27	0,24
Water	n.a.	n.a.	n.a.	n.a.	n.a.	n.a.
W&s & Dry lube	n.a.	n.a.	n.a.	n.a.	n.a.	n.a.
Oil	n.a.	n.a.	n.a.	n.a.	n.a.	n.a.

Friction Factors Between Material and Product

Lubrication	Wearstrip Material		
	Stainless steel	UHMW-PE & PA	BluLub®
Dry	0,27	0,22	0,20
Water	n.a.	n.a.	n.a.
W&s & Dry lube	n.a.	n.a.	n.a.
Oil	n.a.	n.a.	n.a.

Note

Material properties and performance of final product are subject to variation according to operating conditions, e.g. environmental conditions, chemicals, cleanliness.

MX

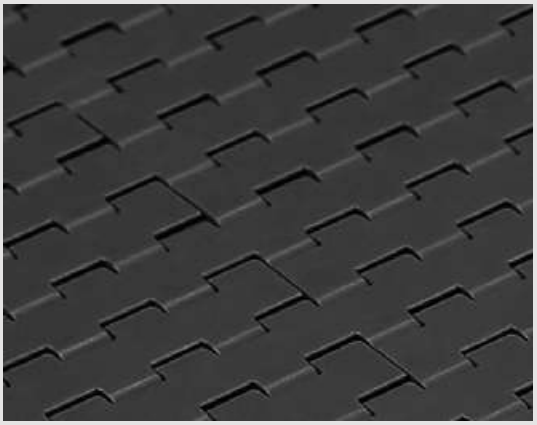

Materials

Description

Extra Performance material (PBT with additives) *with a very low coefficient of friction and improved wear resistance. Recommended for high speed and dry running applications.*

Primary Components: *PBT*

General information

Material	Chemical abbreviation	Allowable application temperatures						FDA Approval
		Fahrenheit			Celsius			
		Min	Max		Min	Max		
			Dry	Wet		Dry	Wet	
Performance PBT	PBT	-40	248	140	-40	120	60	YES

Friction Factors Between Material and Product

Lubrication	Product Material					
	Paper & carton	Metal (steel)	Aluminium	Plastics & PET	Glass (returnable)	Glass (new)
Dry	0,20	0,18	0,15	0,13	0,14	0,12
Water	n.a.	0,16	0,14	0,12	0,13	0,12
W&s & Dry lube	n.a.	0,13	0,12	0,10	0,11	0,10
Oil	n.a.	0,10	n.a.	n.a.	n.a.	n.a.

Friction Factors Between Material and Product

Lubrication	Wearstrip Material		
	Stainless steel	UHMW-PE & PA	BluLub®
Dry	0,20	0,16	0,13
Water	0,17	0,11	0,09
W&s & Dry lube	0,14	0,09	0,08
Oil	0,10	0,10	0,10

Note

Material properties and performance of final product are subject to variation according to operating conditions, e.g. environmental conditions, chemicals, cleanliness.

PFX

Materials

Description

Extra Performance material (PBT with additives) *with a very low coefficient of friction and improved wear resistance. Recommended for high speed and dry running applications.*

Primary Components: *PBT*

General information

Material	Chemical abbreviation	Allowable application temperatures						FDA Approval
		Fahrenheit			Celsius			
		Min	Max		Min	Max		
			Dry	Wet		Dry	Wet	
Extra performance PBT	PBT	-40	248	140	-40	120	60	YES

Friction Factors Between Material and Product

Lubrication	Product Material					
	Paper & carton	Metal (steel)	Aluminium	Plastics & PET	Glass (returnable)	Glass (new)
Dry	0,18	0,16	0,14	0,10	0,11	0,10
Water	n.a.	0,14	0,13	0,11	0,12	0,11
W&s & Dry lube	n.a.	0,12	0,11	0,09	0,10	0,09
Oil	n.a.	0,09	n.a.	n.a.	n.a.	n.a.

Friction Factors Between Material and Product

Lubrication	Wearstrip Material		
	Stainless steel	UHMW-PE & PA	BluLub®
Dry	0,18	0,16	0,12
Water	0,15	0,10	0,08
W&s & Dry lube	0,13	0,08	0,07
Oil	0,09	0,09	0,09

Note

Material properties and performance of final product are subject to variation according to operating conditions, e.g. environmental conditions, chemicals, cleanliness.

PP-PPB-PPW

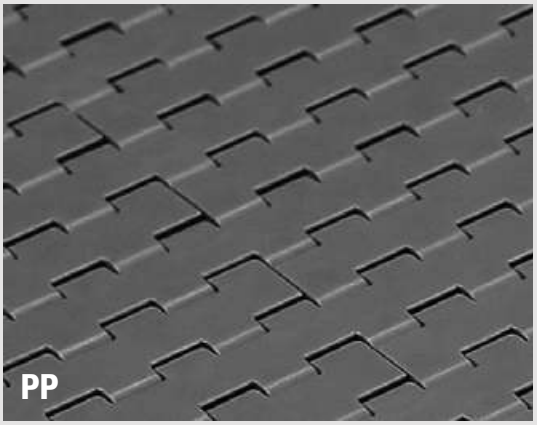

Also available:

PPB

PPW

Description

Polypropylene

for better chemical resistance and higher temperatures.

Primary Component: *PP*

General information

Material	Chemical abbreviation	Allowable application temperatures						FDA Approval
		Fahrenheit			Celsius			
		Min	Max		Min	Max		
			Dry	Wet		Dry	Wet	
Polypropylene	PP	40	220	220	4	104	104	YES

Friction Factors Between Material and Product

Lubrication	Product Material					
	Paper & carton	Metal (steel)	Aluminium	Plastics & PET	Glass (returnable)	Glass (new)
Dry	0,40	0,30	0,32	0,28	0,29	0,26
Water	n.a.	0,24	0,26	0,22	0,23	0,21
W&s & Dry lube	n.a.	0,20	0,20	0,18	0,19	0,18
Oil	n.a.	0,10	n.a.	n.a.	n.a.	n.a.

Friction Factors Between Material and Product

Lubrication	Wearstrip Material		
	Stainless steel	UHMW-PE & PA	BluLub®
Dry	0,29	0,24	0,21
Water	0,23	0,19	0,17
W&s & Dry lube	0,19	0,13	0,13
Oil	0,10	0,10	0,10

Note

Material properties and performance of final product are subject to variation according to operating conditions, e.g. environmental conditions, chemicals, cleanliness.

PPX

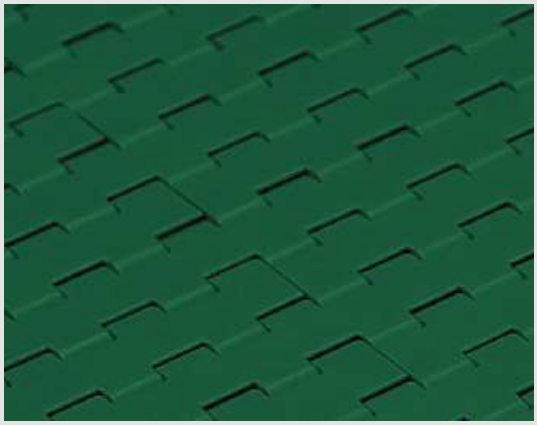

Materials

Description

Reinforced Polypropylene

for improved heat stability and chemical resistance.

Primary Component: *PP*

General information

Material	Chemical abbreviation	Allowable application temperatures						FDA Approval
		Fahrenheit			Celsius			
		Min	Max		Min	Max		
			Dry	Wet		Dry	Wet	
Reinforced Polypropylene	PP	40	220	220	4	104	104	YES

Friction Factors Between Material and Product

Lubrication	Product Material					
	Paper & carton	Metal (steel)	Aluminium	Plastics & PET	Glass (returnable)	Glass (new)
Dry	0,40	0,30	0,32	0,28	0,29	0,26
Water	n.a.	0,24	0,26	0,22	0,23	0,21
W&s & Dry lube	n.a.	0,20	0,20	0,18	0,19	0,18
Oil	n.a.	0,10	n.a.	n.a.	n.a.	n.a.

Friction Factors Between Material and Product

Lubrication	Wearstrip Material		
	Stainless steel	UHMW-PE & PA	BluLub®
Dry	0,29	0,24	0,21
Water	0,23	0,19	0,17
W&s & Dry lube	0,19	0,13	0,13
Oil	0,10	0,10	0,10

Note

Material properties and performance of final product are subject to variation according to operating conditions, e.g. environmental conditions, chemicals, cleanliness.

MWX

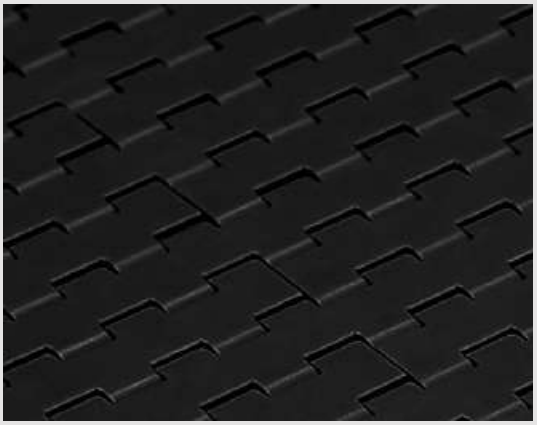

Materials

Description

MWX increases wear life

Used in applications where chain is subject to abrasives conditions such as glass sand and dirt.

Primary Component: *Nylon (PA)*

General information

Material	Chemical abbreviation	Allowable application temperatures						FDA Approval
		Fahrenheit			Celsius			
		Min	Max		Min	Max		
			Dry	Wet		Dry	Wet	
Polyamid Composite	PA	-40	219	N.R.	-40	104	N.R.	-

Friction Factors Between Material and Product

Lubrication	Product Material					
	Paper & carton	Metal (steel)	Aluminium	Plastics & PET	Glass (returnable)	Glass (new)
Dry	0,24	0,21	0,18	0,15	0,17	0,14
Water	n.a.	0,19	0,17	0,14	0,15	0,14
W&s & Dry lube	n.a.	0,15	0,14	0,12	0,13	0,12
Oil	n.a.	0,10	n.a.	n.a.	n.a.	n.a.

Friction Factors Between Material and Product

Lubrication	Wearstrip Material		
	Stainless steel	UHMW-PE & PA	BluLub®
Dry	0,24	0,19	0,15
Water	0,20	0,13	0,11
W&s & Dry lube	0,17	0,11	0,09
Oil	0,10	0,10	0,10

Note

Material properties and performance of final product are subject to variation according to operating conditions, e.g. environmental conditions, chemicals, cleanliness.

PA

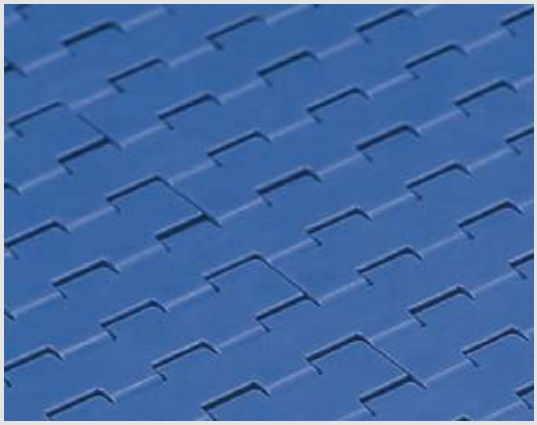

Materials

Description

PA Polyamide composite

The high crystallinity of this material gives it excellent mechanical properties such as high abrasion, high wear resistance as well as good hardness and stiffness.

Primary Components: *Nylon*

General information

Material	Chemical abbreviation	Allowable application temperatures						FDA Approval
		Fahrenheit			Celsius			
		Min	Max		Min	Max		
			Dry	Wet		Dry	Wet	
Polyamid Composite	PA	-40	219	N.R.	-40	104	N.R.	-

Friction Factors Between Material and Product

Lubrication	Product Material					
	Paper & carton	Metal (steel)	Aluminium	Plastics & PET	Glass (returnable)	Glass (new)
Dry	0,24	0,21	0,18	0,15	0,17	0,14
Water	n.a.	0,19	0,17	0,14	0,15	0,14
W&s & Dry lube	n.a.	0,15	0,14	0,12	0,13	0,12
Oil	n.a.	0,10	n.a.	n.a.	n.a.	n.a.

Friction Factors Between Material and Product

Lubrication	Wearstrip Material		
	Stainless steel	UHMW-PE & PA	BluLub®
Dry	0,24	0,19	0,15
Water	0,20	0,13	0,11
W&s & Dry lube	0,17	0,11	0,09
Oil	0,10	0,10	0,10

Note

Material properties and performance of final product are subject to variation according to operating conditions, e.g. environmental conditions, chemicals, cleanliness.

SS

Description

Ferritic Stainless Steel (1.4016)

for standard applications.

Materials

General information

Material	Chemical abbreviation	Allowable application temperatures						FDA Approval
		Fahrenheit			Celsius			
		Min	Max		Min	Max		
			Dry	Wet		Dry	Wet	
Standard Stainless Steel	1.4016	-22	750	265	-30	400	130	-

Friction Factors Between Material and Product

Lubrication	Product Material					
	Paper & carton	Metal (steel)	Aluminium	Plastics & PET	Glass (returnable)	Glass (new)
Dry	0,40	0,50	0,35	0,30	0,47	0,35
Water	n.a.	0,35	0,30	0,25	0,31	0,30
W&s & Dry lube	n.a.	0,20	0,15	0,15	0,21	0,15
Oil	n.a.	0,20	n.a.	n.a.	n.a.	n.a.

Friction Factors Between Material and Product

Lubrication	Wearstrip Material		
	Stainless steel	UHMW-PE & PA	BluLub®
Dry	n.a.	0,35	0,32
Water	0,40	0,27	0,24
W&s & Dry lube	0,20	0,18	0,15
Oil	0,20	0,18	0,15

Note

Material properties and performance of final product are subject to variation according to operating conditions, e.g. environmental conditions, chemicals, cleanliness.

SSE

Materials

Description

Specially treated Ferritic Stainless Steel (1.4589)
for improved working-load and less friction.

General information

Material	Chemical abbreviation	Allowable application temperatures						FDA Approval
		Fahrenheit			Celsius			
		Min	Max		Min	Max		
			Dry	Wet		Dry	Wet	
Special Stainless Steel	1.4589	-22	750	265	-30	400	130	-

Friction Factors Between Material and Product

Lubrication	Product Material					
	Paper & carton	Metal (steel)	Aluminium	Plastics & PET	Glass (returnable)	Glass (new)
Dry	0,38	0,48	0,33	0,29	0,45	0,33
Water	n.a.	0,33	0,29	0,24	0,29	0,29
W&s & Dry lube	n.a.	0,19	0,14	0,14	0,20	0,14
Oil	n.a.	0,19	n.a.	n.a.	n.a.	n.a.

Friction Factors Between Material and Product

Lubrication	Wearstrip Material		
	Stainless steel	UHMW-PE & PA	BluLub®
Dry	n.a.	0,33	0,30
Water	0,38	0,26	0,23
W&s & Dry lube	0,19	0,17	0,14
Oil	0,19	0,17	0,14

Note

Material properties and performance of final product are subject to variation according to operating conditions, e.g. environmental conditions, chemicals, cleanliness.

SSM

Materials

Description

Specially treated Ferritic SS (1.4589)
with optimized surface finish for superior sliding properties. For High-Speed and more critical applications.

General information

Material	Chemical abbreviation	Allowable application temperatures						FDA Approval
		Fahrenheit			Celsius			
		Min	Max		Min	Max		
			Dry	Wet		Dry	Wet	
Max Speed Stainless Steel	1.4589	-22	750	265	-30	400	130	-

Friction Factors Between Material and Product

Lubrication	Product Material					
	Paper & carton	Metal (steel)	Aluminium	Plastics & PET	Glass (returnable)	Glass (new)
Dry	0,34	0,43	0,30	0,26	0,40	0,30
Water	n.a.	0,30	0,26	0,21	0,26	0,26
W&s & Dry lube	n.a.	0,17	0,13	0,13	0,18	0,13
Oil	n.a.	0,17	n.a.	n.a.	n.a.	n.a.

Friction Factors Between Material and Product

Lubrication	Wearstrip Material		
	Stainless steel	UHMW-PE & PA	BluLub®
Dry	n.a.	0,32	0,29
Water	0,36	0,24	0,22
W&s & Dry lube	0,18	0,16	0,14
Oil	0,18	0,16	0,14

Note

Material properties and performance of final product are subject to variation according to operating conditions, e.g. environmental conditions, chemicals, cleanliness.

SSA

Materials

Description

Austenitic Stainless Steel with high resistance to corrosion and acid (AISI 304)

for improved working-load and less friction.

General information

Material	Chemical abbreviation	Allowable application temperatures						FDA Approval
		Fahrenheit			Celsius			
		Min	Max		Min	Max		
			Dry	Wet		Dry	Wet	
Austenitic Stainless Steel	AISI 304	-22	750	265	-30	400	130	-

Friction Factors Between Material and Product

Lubrication	Product Material					
	Paper & carton	Metal (steel)	Aluminium	Plastics & PET	Glass (returnable)	Glass (new)
Dry	0,43	0,38	0,34	0,30	0,33	0,33
Water	n.a.	0,30	0,27	0,21	0,29	0,29
W&s & Dry lube	n.a.	0,15	0,14	0,14	0,15	0,15
Oil	n.a.	n.a.	n.a.	n.a.	n.a.	n.a.

Friction Factors Between Material and Product

Lubrication	Wearstrip Material		
	Stainless steel	UHMW-PE & PA	BluLub®
Dry	0,40	0,30	0,30
Water	0,35	0,22	0,22
W&s & Dry lube	0,15	0,15	0,15
Oil	0,15	0,10	0,10

Note

Material properties and performance of final product are subject to variation according to operating conditions, e.g. environmental conditions, chemicals, cleanliness.

PA

Description

PA Polyamide composite

The high crystallinity of this material gives it excellent mechanical properties such as high abrasion, high wear resistance as well as good hardness and stiffness.

Primary Component: *Polyamide (PA)*

Screws: *Stainless steel*
Nuts: *Zinc plated steel*

Materials

General information

Material	Chemical abbreviation	Allowable application temperatures						FDA Approval
		Fahrenheit			Celsius			
		Min	Max		Min	Max		
			Dry	Wet		Dry	Wet	
Polyamide	PA	-40	221	N.R.	-40	105	N.R.	YES

Note: Material properties and performance of final product are subject to variation according to operating conditions, e.g. environmental conditions, chemicals, cleanliness.

Reinforced PA

Description

PA Polyamide reinforced

High quality polyamide specifically developed for injection molding, glass fiber reinforced.

Primary Component: *Polyamide (PA)*

Screws: *Stainless steel*
Nuts: *Nickel plated brass*

Materials

General information

Material	Chemical abbreviation	Allowable application temperatures						FDA Approval
		Fahrenheit			Celsius			
		Min	Max		Min	Max		
			Dry	Wet		Dry	Wet	
Polyamide Reinforced	PA	-4	248	248	-20	120	120	-

Note: Material properties and performance of final product are subject to variation according to operating conditions, e.g. environmental conditions, chemicals, cleanliness.

Movex®

This catalogue presents and includes the latest generations of products shown in earlier publications and it relates to the current production.

Other information, which may be different from that contained in this catalogue has to be considered invalid.

Movex® S.p.A. reserves the right to carry out modifications rendered necessary by the technical evolution of the products.

© Copyright Movex® S.p.A. 2022
The contents of this catalogue are the copyright of Movex® S.p.A. and may not be reproduced (even extracts) unless written permission is granted.

Every care has been taken to ensure the accuracy of the information contained in this publication but no liability can be accepted for any error or omissions.

Catalogue N° M999512_V1

The digital version of this catalogue is available on:

www.movexii.com

Oadby Conveyors *a division of Oadby Plastics Limited*

68 Scudamore Road
Braunstone Frith Industrial Estate
Leicester
LE3 1UA

Telephone: 0116 232 4848
Email: convteam@oadbyplastics.co.uk

www.oadbyconveyors.co.uk